CI-C2 CATALOG

53-67

2019 Edition

Corvette America

GENERATIONS OF
RESTORATION
Style &
PERFORMANCE

Corvette America's Car Covers are Trusted by Generations of Corvette owners!

MAX TECH CAR COVERS 2 Year Warranty

INDOOR or OUTDOOR cover —Features four layers of protective, breathable material. Front & rear elastic, custom fit mirror pockets & non-scratch tie-down grommets. **Free Storage Bag, Cable & Cable Lock!**

#X21556 53-62
#X21557 63-67

ONLY **$92.99**

Onyx
by Corvette America

ONYX CAR COVERS 3 Year Warranty

INDOOR cover — The ONYX car cover is made of soft, stretchy material that's easy to install over your Corvette for a sleek, form-fitting look.
FREE Storage Bag included!

#52261 53-62
#52262 63-67

ONLY **$174.99**

SOFTSHIELD CAR COVERS 2 Year Warranty

INDOOR or OUTDOOR cover — Three outer layers of durable UV treated polypropylene material. The inner layer is made of soft polyester that will protect your Vette's finish. **Free Storage Bag, Cable & Cable Lock!**

#23560 53-62
#23561 63-67

ONLY **$143.99**

PREMIUM FLANNEL CAR COVERS 3 Year Warranty

INDOOR cover — Our Premium Flannel Cover effectively pampers your Corvette in a thick, double-napped layer of superior protection! 100% breathable & mildew resistant. **Free Storage Bag, Cable & Cable Lock!**

#4013 53-62
#4015 63-67

ONLY **$153.99**

ECONO TECH CAR COVERS 1 Year Warranty

INDOOR cover — A light, single-layer indoor cover that repels water & dirt but remains breathable. One of the finest budget-priced covers.
Free Storage Bag, Cable & Cable Lock!

#21534 53-62
#21535 63-67

ONLY **$50.99**

THE WALL CAR COVERS 2 Year Warranty

INDOOR or OUTDOOR cover — Put the "Wall" around your Vette & keep it safe from the rain, snow, ice, tree sap, dirt & debris that bothers outside parkers. **Free Storage Bag, Cable & Cable Lock!**

#X2160 53-62
#X2161 63-67

ONLY **$102.99**

Interior Products by

Corvette America

Made in the U.S.A.

1953-1962 INTERIORS

1956-1962 Vinyl Seat Covers

Corvette America Seat Covers are carefully made with the world-class craftsmanship and strict attention to detail that your car deserves. Each beautifully reproduced set contains two backs and two bottoms.

4165_	56-57	Vinyl Seat Cover Set	**$483.99**
4166_	58	Vinyl Seat Cover Set	**$713.99**
4167_	59	Vinyl Seat Cover Set	**$419.99**
4168_	60	Vinyl Seat Cover Set	**$419.99**
4169_	61	Vinyl Seat Cover Set	**$419.99**
4170_	62	Vinyl Seat Cover Set	**$419.99**

1959-1962 Leather Seat Covers

411720	59	100% Leather Seat Cover Set - Black	**$809.99**
411820	60	100% Leather Seat Cover Set - Black	**$809.99**
411920	61	100% Leather Seat Cover Set - Black	**$889.99**
412020	62	100% Leather Seat Cover Set - Black	**$889.99**
411735	59	100% Leather Seat Cover Set - Red	**$809.99**
411835	60	100% Leather Seat Cover Set - Red	**$809.99**
411935	61	100% Leather Seat Cover Set - Red	**$889.99**
412035	62	100% Leather Seat Cover Set - Red	**$889.99**

Use Your COLOR CODE When You Order!

Once you know your 2-digit Interior Color Code, ordering any Corvette America interior product is easy. All part numbers for interior items, where multiple colors are available, consist of a part number followed by a blank space for the Color Code.

1953-1962 COLOR CODES

53-55 Beige **Code 05**	56-57 Beige **Code 03**	59-62 Black **Code 20**	58-60 Blue **Code 07**	61 Blue **Code 08**
58 Charcoal **Code 04**	61-62 Fawn **Code 09**	53-55 Red **Code 01**	56-58 Red **Code 02**	59-62 Red **Code 35**
59-60 Turquoise **Code 06**				

Select all the items you want to order & add your 2-digit Color Code to each part number.

The colors shown are approximations to assist you in determining your interior color. Actual material samples may be requested.

800-458-3475
CorvetteAmerica.com

WARNING: Cancer and Reproductive Harm — www.P65Warnings.ca.gov

FREE Installation Videos!

1961-62 Seat Cover Installation Video - 26 minutes

Watch our installation videos on
www.CorvetteAmerica.com

Seat Cover Installation Service

Let Corvette America take the hassle out of recovering your worn & dirty seats! Simply send your seats to us, & we'll do the rest. Since we manufacture what we sell, our installation experts will ensure that your new seat covers are installed correctly. **The workmanship is guaranteed for a full year!** Typical turn around time is 2-3 weeks but could vary depending on volume. Seat covers, foam & any necessary hardware must be purchased separately.

15001 56-62 Seat Cover Installation Service $599.99

1956-1962 Seat Foam

Our Seat Foam has the correct feel, density and size. Each set contains two backs and two bottoms.

MADE BY Corvette America

22148 56-57 Seat Foam Set $489.99
22149 58 Seat Foam Set $489.99
25472 59-60 Seat Foam Set $289.99
25473 61 Seat Foam Set $289.99
25474 62 Seat Foam Set $289.99

Renew your Corvette's interior with the popular, the affordable, the Original Interior Package from Corvette America. When you buy at least three of the major interior components — **Carpet, Seat Covers, Door Panels, Dash Pads** — you'll SAVE big with "Package" prices! Interior Packages are available for 1959-2004 Corvettes.

Corvette America's INTERIOR Package THE ORIGINAL

1956-1962 Seat Tracks

These tracks feature a triple chrome adjuster handle and thicker 14 gauge metal, like the originals. Original design of adjuster handle holding loops. Cadmium plating throughout.

45020 56-60 Seat Tracks - Driver Side $1274.99
45022 61-62 Seat Tracks - Driver Side $1274.99
45023 56-60 Seat Tracks - Passenger Side $1274.99
45025 61-62 Seat Tracks - Passenger Side $1274.99

1956-1962 Seat Springs

The Reproduction Springs feature correct wires, coils, burlap pockets, muslin ticking and hand-tied knots. Or save big with our Replacement Springs.

41781 53-62 Reproduction Seat Springs $149.99
X2076 53-62 Replacement Seat Springs $75.99

Seat Cotton Burlap Pad Kits

48710 53-55 Seat Cotton Burlap Pad Kit $36.99
47327 56-62 Seat Cotton Burlap Pad Kit $36.99

Seat Cover Installation Kits

All the hooks, clips, wires and hog rings you need to install your new seat covers.

X2080 58-60 Seat Cover Installation Kit $30.99
X2081 61-62 Seat Cover Installation Kit $30.99
8814 53-62 Seat Cover Clip Installation Tool $11.99

Hog Rings

Typical set of 1956-1962 seats needs 100 hog rings for installation.

4930 Hog Rings - Package of 10 ..... $2.99
4904 Hog Ring Pliers - Economy $6.99
4902 Hog Ring Pliers - Spring-Loaded $21.99
4900 Hog Ring Pliers - Pro Model $26.99

Interior Screw Kits

All the fasteners you need for your new interior components.

K1486 56-57 Interior Screw Kit $16.99
K1069 58-60 Interior Screw Kit $37.99
K1068 61-62 Interior Screw Kit $37.99

Product photos, descriptions and diagrams at:
www.CorvetteAmerica.com

WARNING: Cancer and Reproductive Harm — www.P65Warnings.ca.gov

Serving the Corvette Community Since 1977.

1959-1962 Seat Belt Sets

These belts feature chrome buckles with metal-to-metal contact, satin-finished tops, four-band webbing and bolt-on anchor ends. There's a 1/4" difference in width from the original belts. Can also be used in 1956-1958 Corvettes where seat belts were not original.

Set includes driver and passenger belts. Meets SAE J386 and FMV SS 209/302 specs.

Note: Colors may not match original interior colors.

415607	59-60	Seat Belts - Blue w/ Chrome Lifts	$109.99
415606	59-60	Seat Belts - Turquoise w/ Chrome Lifts	$109.99
415620	59-62	Seat Belts - Black w/ Chrome Lifts	$109.99
415635	59-62	Seat Belts - Red w/ Chrome Lifts	$109.99

1956-1962 OE Style Seat Belts - Hambone

These seat belt sets feature 4 panel webbing and aluminum lift latch buckles. For use with hambone style hardware (sold separately). Can also be used in 1956-1958 Corvettes where seat belts were not original. Set includes driver and passenger belts. Meets SAE J386 and FMV SS 209/302 specs.

Note: Colors may not match original interior colors.

41496	56-62	Seat Belts - Black w/ Chrome Lifts	$109.99
41497	56-62	Seat Belts - Red w/ Chrome Lifts	$109.99
41498	56-62	Seat Belts - Frost Blue w/ Chrome Lifts	$109.99
41499	56-62	Seat Belts - Saddle w/ Chrome Lifts	$109.99
41500	56-62	Seat Belts - Silver w/ Chrome Lifts	$109.99
41501	56-62	Seat Belts - Turquoise w/ Chrome Lifts	$109.99
34840	59-62	Seat Belt Bolt Kit - 2 req'd	$5.99
34841	59-62	Seat Belt Bolt Kit - Silver - 2 req'd	$14.99
34842	59-62	Seat Belt Bolt Kit - Gold - 2 req'd	$11.99
25469	53-62	Seat Belt Retractor - Clip On - 2 req'd	$13.99

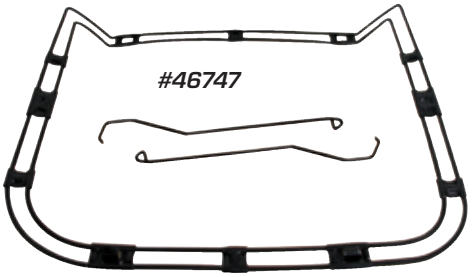

1956-1962 Seat Hardware

35627	56-62	Seat Adjuster Handle Return Springs - pr	$13.99
35628	56-62	Seat Belt Floor "Hambone" Bracket & Tightener - 2 req'd	$32.99
28747	56-62	Seat Belt Mounting Bolt Kit "WB" - 2 req'd	$5.99
28748	56-62	Seat Belt Mount Bracket - Outer on Floor	$35.99
28749	56-62	Seat Belt Reinforcement - Underbody Outer	$20.99
28750	56-62	Seat Belt Reinf. Mount Plates, Inner w/ Stud - pr	$45.99
47326	56-58	Seat Bottom Retainer Ring w/ Hold Down Rods - fits LH or RH	$224.99
46747	59-60	Seat Bottom Retainer Ring - w/ Hold Down Rods - LH	$228.99
46749	59-60	Seat Bottom Retainer Ring - w/ Hold Down Rods -	$228.99
47328	61-62	Seat Bottom Retainer Ring w/ Hold Down Rods - fits LH or RH	$228.99
28734	53-62	Seat Hold Down Plate - Underbody w/ Nut	$6.99
28735	61-62	Seat Hold Down Plate - Underbody Front LH	$15.99
28736	61-62	Seat Hold Down Plate - Underbody Front RH	$15.99
27371	56-62	Seat Mount Bolt Set - 8 pc	$9.99
28745	58-60	Seat Support Bracket, Rear on Floor - pr	$85.99
28746	61-62	Seat Support Bracket, Rear on Floor - ea	$48.99
28737	56-60	Seat Track Mount Bracket - Front Outer LH	$17.99
28738	56-60	Seat Track Mount Bracket - Front Outer RH	$17.99
28739	56-60	Seat Track Mount Bracket - Front Inner LH	$17.99
28740	56-60	Seat Track Mount Bracket - Front Inner RH	$17.99
28741	61-62	Seat Track Mount Bracket - Front	$26.99
28742	56-59	Seat Track Mount Bracket - Rear	$26.99
28743	60	Seat Track Mount Bracket - Rear	$24.99
28744	61-62	Seat Track Mount Bracket - Rear	$26.99
28733	56-62	Seat Track Roller Assembly - 4 req'd per seat	$34.99

1956-1962 SEAT HARDWARE

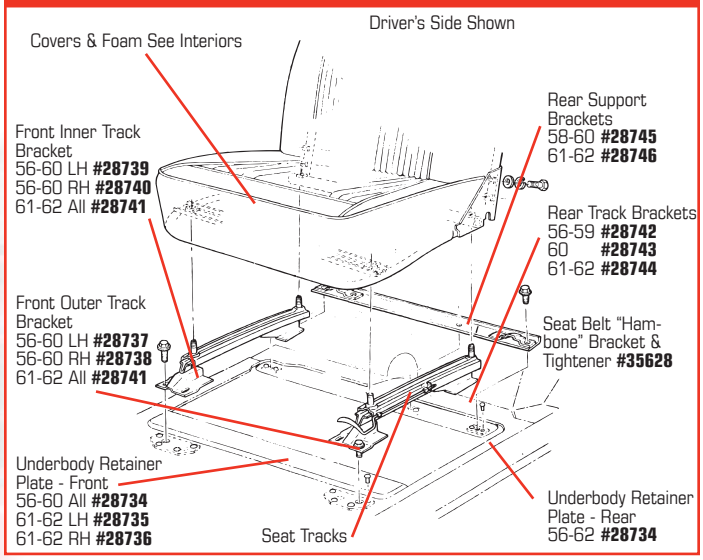

800-458-3475
CorvetteAmerica.com

WARNING: Cancer and Reproductive Harm — www.P65Warnings.ca.gov

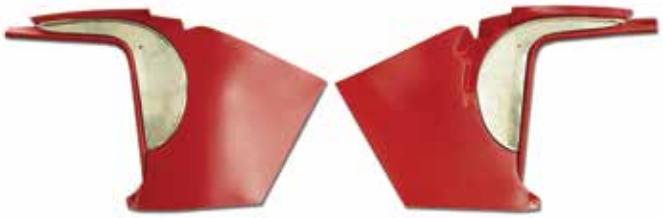

#412535

#412607

1958-1962 Deluxe Kick Panels

MADE BY Corvette America

No assembly required. Includes: Windlaces, Trim Strips & Inserts. Pre-painted to Match. Made in the USA by Corvette America.

4126_	58-59	Kick Panels - pr	$499.99
4125_	60	Kick Panels - pr	$499.99
4124_	61	Kick Panels - pr	$499.99
4123_	62	Kick Panels - pr	$449.99

#412735

#415807

MADE BY Corvette America

1956-1957 Kick Panels

4157_	56-57	Kick Panels - pr	$193.99
K1197	56-57	Kick Panel Screws - 12 pc set	$4.99

1958-1962 Kick Panels & Components

Our 1958-1962 Kick Panels are now available as prepainted replacements.

4154	58-62	Kick Panels - Dye to Match - pr	$203.99
4127_	58-62	Kick Panels - Prepainted - Replacement - pr	$229.99
4160_	62	Kick Panel Inserts - pr	$65.99
35616	58-62	Kick Panel Mount Brackets - 4 pc w/ Rivets	$24.99
K1063	58-62	Kick Panel Screws - 32 pc	$7.99
50105	58-59	Kick Panel Sheet Metal - 2 pc	$183.99
50106	60	Kick Panel Sheet Metal - 2 pc	$183.99
50107	61	Kick Panel Sheet Metal - 2 pc	$183.99
X2027	58-62	Kick Panel Trim Strips - pr	$79.99
4158_	58	Kick Panel Windlace - pr	$42.99
4159_	59-62	Kick Panel Windlace - pr	$26.99

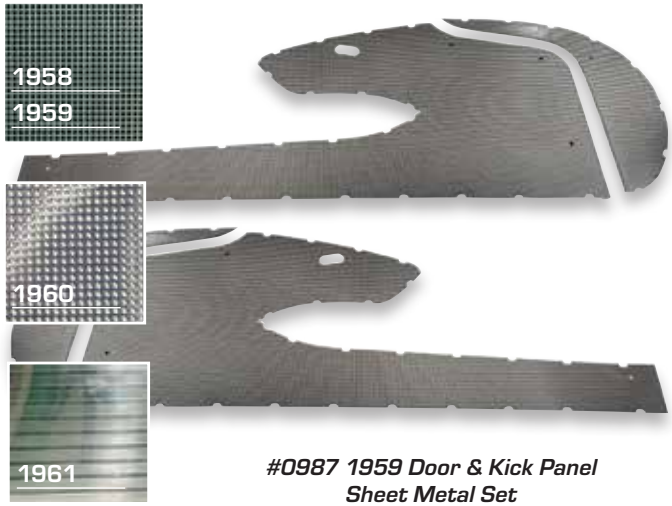

#0987 1959 Door & Kick Panel Sheet Metal Set

1958-1961 Door & Kick Panel Sheet Metal

0881	58	Door & Kick Panel Sheet Metal Set - 4 pc	$478.99
0987	59	Door & Kick Panel Sheet Metal Set - 4 pc	$392.99
0988	60	Door & Kick Panel Sheet Metal Set - 4 pc	$402.99
0989	61	Door & Kick Panel Sheet Metal Set - 4 pc	$407.99

#416020

#430207

#X2022

#430435

1958-1962 Complete Armrests

MADE BY Corvette America

Complete assemblies ready to be installed.

4302_	58	Armrests w/ Chrome Ends - pr	$309.99
4301_	58	Armrests w/o Chrome Ends - pr	$209.99
4304_	59-61	Armrests w/ Chrome Ends - pr	$309.99
4303_	59-61	Armrests w/o Chrome Ends - pr	$209.99
4305_	62	Armrest - fits either door - ea	$78.99
K1056	58-61	Armrest Screws - 6 pc set	$15.99
K1055	62	Armrest Screws - 4 pc set	$3.99
K1066	62	Armrest Pad Screws - 4 pc set	$1.99

1958-1961 Armrest Chrome Ends

X2022	58-61	Armrest Chrome Ends - pr	$129.99

1958-1962 Armrest Covers & Supports

4298_	58	Armrest Covers - pr	$39.99
26021	58-61	Armrest Supports - pr	$96.99
4299_	59-61	Armrest Covers - pr	$31.99
4300_	62	Armrest Covers - pr	$11.99
X2016	62	Armrest Support - ea	$31.99

WARNING: Cancer and Reproductive Harm — www.P65Warnings.ca.gov

1956-1957 Deluxe Door Panels

Features pre-installed Waffle-Pattern Center Door Covers and Lower Door Covers mounted over original-quality backing. Includes Trim Strips & Sheet Metal already installed! Upper Rails and Door Opening Trim Panels sold separately.

4342_ 56-57 Deluxe Door Panels - pr **$1218.99**

1956-1957 Mounted Door Panels

Features pre-installed Waffle-Pattern Center Door Covers and Lower Door Covers mounted over original-quality backing. Upper Rails and Door Opening Trim Panels sold separately. Upper Rail Covers included. Sold in pairs. Trim Strips & Sheet Metal Sold Separately.

4341_ 56-57 Mounted Door Panels - pr **$631.99**

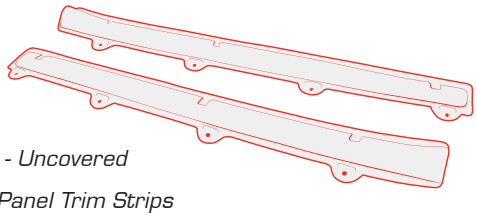

1956-57 Upper Rails - Uncovered

#0640 56-57 Door Panel Trim Strips

#21192 Door Opening Trim Panels

#21155 56-57 Armrest Supports

#21156 Armrest Foam

1956-1962 Door Panel Hardware

21158	56-57	Armrest Cup - each	**$19.99**
21156	56-57	Armrest Foam - pr	**$65.99**
21155	56-57	Armrest Supports - set	**$121.99**
X2448	56-62	Door Lock Knob - each	**$13.99**
35624	56-62	Door Lock Knob Washers - pr	**$3.99**
0715	53-62	Door Opening Knobs - pr	**$9.99**
21192	56-57	Door Opening Trim Panels - pr	**$269.99**
K1198	56-57	Door Panel Screws - 36 pc	**$9.99**
21193	56-57	Door Panel Sheet Metal - set	**$228.99**
0640	56-57	Door Panel Trim Strips - 6 pc	**$230.99**
21166	56-57	Upper Rails - Uncovered - pr	**$356.99**

Use Your Code Whenever You Order

Once you know your 2-digit Interior Color Code, ordering any Corvette America interior product is easy. All part numbers for interior items, where multiple colors are available, consist of a 4-digit part number followed by "_" for Color Code. **Find your code on page 2.**

1956-1957 Door Panel Purchasing Info

When purchasing 1956-1957 Deluxe or Mounted Door Panels, a set of Upper Rails and Door Opening Trim Panels are required to complete the panels. These items are sold separately & located on this page.

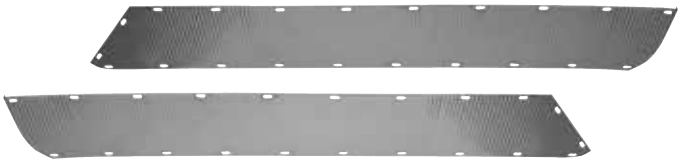

#21193 Door Panel Sheet Metal

#X2448

#35624

#0715

800-458-3475
CorvetteAmerica.com

WARNING: Cancer and Reproductive Harm — www.P65Warnings.ca.gov

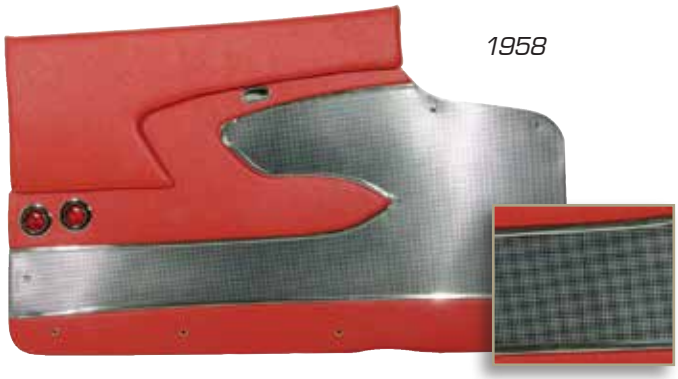

1958

1959

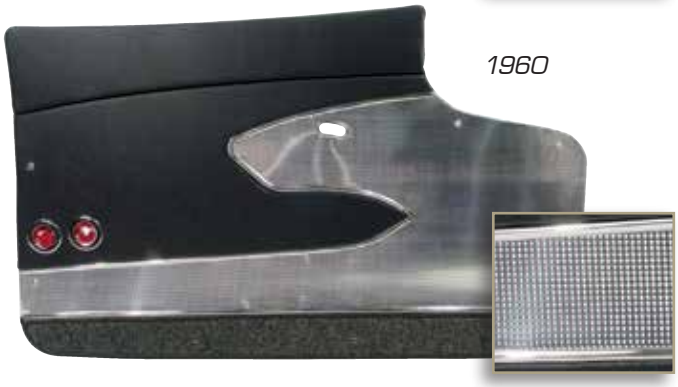

1960

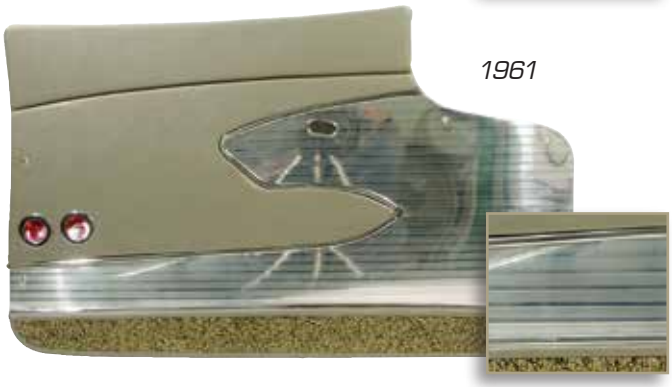

1961

1962

Call Today & SAVE on a NEW Interior Package!

Get discounts on Interiors & Parts when you order an Interior Package!

1958 Deluxe Door Panels

Includes pre-installed Upper Metal Supports, S-Trim, Sheet Metal, Reflectors and Door Opening Bezels. Kick Panel Sheet Metal included.

4347_ 58 Deluxe Door Panels - pr **$1529.99**

1959-1961 Deluxe Door Panels

Includes pre-installed Metal Upper Supports, S-Trim, Sheet Metal, Reflectors & Door Opening Bezels Kick Panel Sheet Metal included.

4352_ 59 Deluxe Door Panels - pr **$1259.99**
4358_ 60 Deluxe Door Panels - pr **$1259.99**
4359_ 61 Deluxe Door Panels - pr **$1259.99**

If you want the best door panels for your 1959-61 Corvette, this is the place! Corvette America now produces all of these panels with the only true reproduction door panel backs available. That means greatly improved quality, superior fit and the highest value for your restoration dollar!

1960-1962 Corvette Owners Please Note: When ordering 1960, 1961 or 1962 door panels, select code **20** for the original Olive Black Tuxedo carpet strip at the base of the panels. If you order or have 100% black carpet (vs. original Olive Black) and want door panels with matching carpet strips, select code **B1**.

1962 Deluxe Door Panels

Includes pre-installed Metal Upper Supports, Reflectors, Door Opening Bezels and Trim Strips.

4364_ 62 Deluxe Door Panels - pr **$809.99**

1959-1961 Door Panels

Corvette America is dedicated to continually improving our interior products with over three decades of research, development and manufacturing experience. That dedication to quality improvement is evident in the new 1959-1961 Door Panels.

These Door Panels are improved with raised inserts that are reshaped and rounded for a softer, more original appearance that fit perfectly with the new S-Trim. The upper part of the panel now has a thin layer of foam padding under the vinyl for a more upholstered look and feel. The arc of the sew line on the upper panel is patterned to the upper part of the chip board for a parallel fit between the two pieces. The top of the panel has been radius cut to match the contour of the original GM panels.

WARNING: Cancer and Reproductive Harm — www.P65Warnings.ca.gov

1959-1962 Deluxe Door Panels Available in 100% Leather

MADE BY Corvette America

Includes pre-installed Metal Upper Supports, Trim, Reflectors and Door Opening Bezels (as shown in photos). Available in Black and Red. 58-61 Panels feature pre-installed Sheet Metal, and include Kick Panel Sheet Metal.

412120	59	Black Deluxe Door Panels - pr	**$1559.99**
412220	60	Black Deluxe Door Panels - pr	**$1559.99**
413720	61	Black Deluxe Door Panels - pr	**$1559.99**
414420	62	Black Deluxe Door Panels - pr	**$1349.99**
412135	59	Red Deluxe Door Panels - pr	**$1559.99**
412235	60	Red Deluxe Door Panels - pr	**$1559.99**
413735	61	Red Deluxe Door Panels - pr	**$1559.99**
414435	62	Red Deluxe Door Panels - pr	**$1349.99**

Have an idea for a custom set of panels?
Call to speak to a Sales Rep. 800-458-3475

Qualifies INTERIOR Package

1958 Door Panels With Upper Supports

Includes pre-installed Upper Metal Supports.

4345_	58	With Metal Upper Supports - pr	**$999.99**

1958 Door Panels Without Upper Supports

For the do-it-yourselfer. Requires transfer of your original upper supports and trim.

4343_	58	Without Upper Supports - pr	**$509.99**

Qualifies INTERIOR Package

1959-1961 Door Panels With Upper Supports

Includes pre-installed Metal Upper Support.

4350_	59	Door Panels w/ Supports - pr	**$469.99**
4355_	60-61	Door Panels w/ Supports - pr	**$469.99**

Qualifies INTERIOR Package

1962 Door Panels With Upper Supports

Includes pre-installed Metal Upper Supports.

4362_	62	Door Panels with Upper Supports - pr	**$429.99**

Corvette America's INTERIOR Package THE ORIGINAL

Call Today & SAVE on a NEW Interior Package!
Get discounts on Interiors & Parts when you order an Interior Package!

800-458-3475
CorvetteAmerica.com

WARNING: Cancer and Reproductive Harm — www.P65Warnings.ca.gov

1958-1961 Door Panel S-Trim

Our 12-Piece Set completes both doors.

X2028 58-61 Door Panel S-Trim - 12 pc set $249.99

1962 Door Panel Trim

For 1962 Doors, the 6-piece set completes both doors.

0647 62 Door Panel Trim - 6 pc set $229.99

#X2099

#X2121

#X2079

#X2448

1958-1962 Door Panel Reflectors

0716 58-62 Door Panel Reflector - ea $19.99
X2099 58-62 Door Panel Reflectors - 4 pc $59.99
42013 58-61 Door Panel Reflector Bracket - 4 pc $15.99

1958-1962 Door Opening Bezels

X2079 58-61 Door Opening Bezels - pr $24.99
X2121 62 Door Opening Bezels - pr $19.99

1956-1962 Door Lock Knob & Washer

X2448 56-62 Door Lock Knob w/ Washer - ea $13.99
35624 56-62 Door Lock Knob Washers - pr $3.99
0718 56-62 Window Crank Retaining / Lock Knob Clip - ea $0.99

1962 Door Panel Screws & Washers

K1061 62 Door Panel Screws & Washers - 26 pc set $5.99
K1067 62 Door Panel Washers - Flush - 8 pc set $3.99

#0077

#4909

#0718

1956-1962 Window Crank Handle

0077 56-62 Window Crank Handle - Replacement - ea $10.99
27647 56-62 Window Crank Handle Foam Seal - Behind Door Panel - ea $12.99
4909 56-62 Window Crank Removal Tool - ea $7.99
0718 56-62 Window Crank Retaining / Lock Knob Clip - ea $0.99
35625 56-62 Window Crank Spacers - Plastic - pr $4.99
35626 56-62 Window Crank Spacer Springs - pr $7.99

1956-1962 Window Felts & Liners

27480 56-58 Inner Door Garnish Molding - pr $104.99
27481 59-62 Inner Door Garnish Molding - pr $104.99
K1212 58-62 Inner Door Garnish Molding Screw Set $4.99
27464 56-62 Window Felts - Inner and Outer - 4 pc set - Reproduction - Correct size bead along entire length of the Felt $97.99
27461 56-62 Window Felt & Run Set - Reproduction - Correct Window Felts and Correct White - Stitched Front Window Run $209.99
0654 56-62 Window Felt Staples - Stainless Steel - 25 pc $3.99
0662 56-62 Window Front Run Liner - Replacement - ea $30.99
0898 56-62 Window Rear Run Liner - ea $7.99

Note: Inner Door Garnish Moldings are necessary for mounting Inner Door Felts and Upper Door Panel Supports to door.

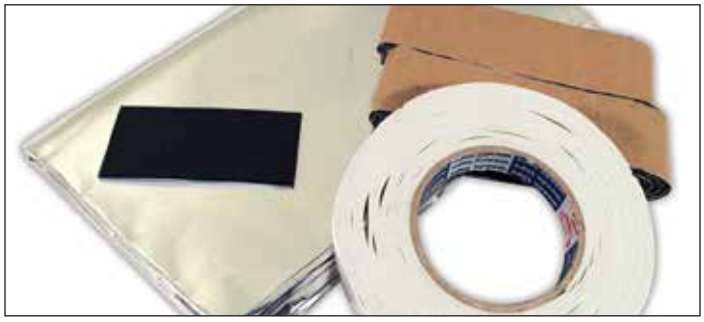

AcoustiSHIELD™

1953-1962 AcoustiShield Door Noise Dampening Kit

AcoustiShield's Door Noise Dampening Kit eliminates noise and vibration from your Vette's outer door skin. Includes six self-adhesive 2" x 24" Dynamat Damper strips & illustrated instructions.

51977 53-62 AcoustiShield Door Noise Dampening Kit $62.99

#402409

#402435

1958-1962 Dash Assemblies

58-62 aluminum dash insert installation has always been time consuming and difficult. Now available are complete assemblies, ready for installation, in all three styles.

39285	58	Dash Insert Assembly w/ White Letters	$227.99
39286	59	Dash Insert Assembly w/ Black Letters	$215.99
39287	60-62	Dash Insert Assembly w/ Black Letters	$247.99
0948	60-62	Dash Insert Bars - Red & Blue - pr	$45.99
0944	58	Dash Insert	$79.99
0945	59	Dash Insert	$81.99
0947	60-62	Dash Insert	$81.99

1958-1962 Dash Pads

Corvette America Dash Pads are made with the world-class craftsmanship that your Corvette deserves. They feature precise size, fit, color and texture. An exact reproduction of your original.

New improvements in manufacturing and thorough test-fitting ensure the best fit and finish available.

402307	58	Blue - Pebble Grain	$549.99
402304	58	Charcoal - Pebble Grain	$549.99
402302	58	Red - Pebble Grain	$549.99
402407	59-60	Blue	$449.99
402406	59-60	Turquoise	$449.99
402420	59-62	Black	$449.99
402435	59-62	Red	$449.99
402408	61	Jewel Blue	$449.99
402409	61-62	Fawn	$449.99

1958-1962 Dash Pads - Speaker Delete

402602	58	Dash Pad - Speaker Delete - Red	$579.99
402604	58	Dash Pad - Speaker Delete - Charcoal	$579.99
402607	58	Dash Pad - Speaker Delete - Blue	$579.99
402707	59-60	Dash Pad - Speaker Delete - Blue	$549.99
402706	59-60	Dash Pad - Speaker Delete - Turquoise	$549.99
402720	59-62	Dash Pad - Speaker Delete - Black	$549.99
402735	59-62	Dash Pad - Speaker Delete - Red	$549.99
402708	61	Dash Pad - Speaker Delete - Jewel Blue	$549.99
402709	61-62	Dash Pad - Speaker Delete - Fawn	$549.99

Call Today & SAVE on a NEW Interior Package!

Get discounts on Interiors & Parts when you order an Interior Package!

1956-1957 Dash Covers

Restore your dash pad to original condition with a new Dash Cover from Corvette America.

402803	56-57	Beige Dash Cover	$65.99
402802	56-57	Red Dash Cover	$65.99

800-458-3475
CorvetteAmerica.com

WARNING: Cancer and Reproductive Harm — www.P65Warnings.ca.gov

#0944 1958

#1820

#1815

#0945 1959

#1610

#1610

#0948 1960-62

#407006

#1114

#1115

#4156

#4155

Dash Components

0946	58-59	Dash Pad End Caps - 59E Reproduction	$38.99
0950	60-62	Dash Pad End Caps - Ready to Paint - pr	$40.99
K1052	58-62	End Cap Screws - 4 pc set	$3.99
4067_	58	Grab Bar Cover	$42.99
4069_	58	Grab Bar Assembly w/ metal bar, padding & vinyl cover	$109.99
4068_	59-62	Grab Bar Cover	$21.99
4070_	59-62	Grab Bar Assembly w/ metal bar, padding & vinyl cover	$109.99
1815	58-62	Grab Bar Chrome End Caps - pr	$68.99
K1059	58-62	Grab Bar End Cap Screws - 4 pc	$3.99
27428	58-62	Grab Bar End Mounting Brackets - pr	$45.99
27426	58-62	Grab Bar Retainer Nut & Screw Kit	$27.99
27427	58-62	Grab Bar Screws - 4 pc	$7.99
4155	59-62	Package Tray	$152.99
27435	59-62	Package Tray Bracket - 3 pc set	$11.99
K1064	59-62	Package Tray Screws - 19 pc set	$6.99
4156	59-62	Package Tray Support	$121.99
K1065	59-62	Package Tray Support Screws - 12 pc set	$3.99
0676	59-62	Package Tray Trim Strip	$26.99
1820	59-62	Speaker Bezel - Paint to Match	$44.99
1114	58-59	Speaker Grille	$45.99
1115	60-62	Speaker Grille	$24.99
1610	58-62	Speaker Unit - Correct 8-10 Ohm	$69.99

Interior Dyes

Corvette America's Interior Dye produces accurate color and solid coverage on leather, vinyl, fiberglass, plastic and metal.

Available in a 12-oz. Aerosol spray or Quart. Use your interior Color Code to complete the part number.

Dye Surface Prep

Use our Surface Prep to remove dirt, oils and residue before priming. Fast drying and ready to paint in minutes.

Adhesive Promoter

Promotes strong, even adhesion of topcoat material when repairing or refinishing plastics. Also works on most flexible or rigid plastics on painted surfaces.

Primer

For best results, finish off your prep work with our quality primer. Promotes even paint coverage and a better finish.

Spray Adhesive

Our high-tack Interior Spray Adhesive is easy to work with & produces a stong bond between hardparts and materials.

Interior Dye Clear Coat

Protect your reconditioning work for years to come with our Interior Clear Coat. Covers your interior components with a smooth, protective finish & preserves your interior's color.

4319_	Dye - 12 oz. Aerosol	$19.99
4321_	Dye - Quart	$82.99
49720	Interior Dye Adhesive Promoter	$31.99
49721	Interior Dye Clear Coat	$31.99
49722	Interior Dye Surface Prep	$21.99
432000	Primer - Aerosol - 12 oz	$20.99
432100	Primer - Quart	$30.99
8568	Spray Adhesive	$29.99

WARNING: Cancer and Reproductive Harm — www.P65Warnings.ca.gov

Gros Point

Daytona

Tuxedo

Insulation Kit

Deaden road noise and keep your interior cooler! Put a Carpet Insulation Kit under your new carpeting.

35611 53-62 Carpet Dimmer Switch Grommet - Correct Rubber $9.99
26700 53-62 Carpet Insulation Kit - Front $90.99

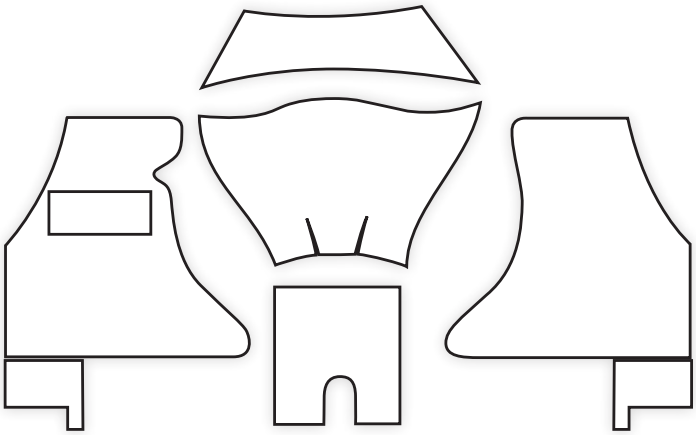

1953-1955 Gros Point

4499_ 53-55 Gros Point Carpet Set $409.99

1956-1959 Low Loop Daytona

4500_ 56-57 Daytona Carpet Set $319.99
4501_ 58-59 Daytona Carpet Set $319.99

1959-1962 Tuxedo Loop

Qualifies INTERIOR Package

4502_ 59-60 Tuxedo Carpet Set $289.99
4503_ 61-62 Tuxedo Carpet Set $289.99

Note: Order code 20 for 59-60 or 61-62 Olive Black Tuxedo, which matches original. For 100% Black please use code B1. **Note**: Stock 1959 Corvettes may feature either Daytona or Tuxedo Carpet depending on production number. Please specify your correct style when ordering.

Incomparable Details & Quality

Correct Foam Backing

Accurate dark gray color (vs. white) and high density for 1953-62. Correct 1953-55 Gros Point & 1956-59 Daytona Carpet

Correct Tuxedo Carpet

The Only 1953-1962 Carpet for the True Restorer!

Heat Barrier Kit

If heat reduction is your main concern, this option is for you. Made from technologically advanced ceramic cloth backed by reinforced foil, Heat Barrier Kits will reduce interior compartment temperatures by up to 50%! Thermal rated to 2300°. Only 1/8" thick, so your carpet will fit perfectly. May be combined with carpet insulation. Each piece is clearly labeled for easy installation.

41894 56-62 Heat Barrier Kit - Front $132.99

800-458-3475
CorvetteAmerica.com
WARNING: Cancer and Reproductive Harm — www.P65Warnings.ca.gov

#32700 #32702 #32704

#32701 #32703

Floor Mats

Protect your new 1953-1962 Carpet with a matching set of Floor Mats! Choose from Gros Point, Tuxedo or Daytona carpet. Edges are bound and mats feature non-skid backing.

4648_ 53-55 Gros Point - pr..... **$129.99**
4649_ 56-58 Daytona - pr..... **$139.99**
4650_ 59-62 Tuxedo - pr..... **$129.99**

Note: *465020 is Olive Black Tuxedo which matches original. For 100% Black use code B1.*

Upgrade to an Embroidered Logo! 1956 - 1962 Only.

Note: Order requires 2 item numbers - the item # and color code shown above plus the item # and logo code "LA".

Example: To order 1959 Red Daytona mats with embroidered logo, order both 464935 and 4649LA.

 # + LA 56-62 Embroidered Logo on Daytona or Tuxedo Mats..... Add **$34.99**

Use Your Code Whenever You Order

Once you know your 2-digit Interior Color Code, ordering any Corvette America interior product is easy. All part numbers for interior items, where multiple colors are available, consist of a 4-digit part number followed by "_" for Color Code. **Find your code on page 2.**

Rubber Mat Sets with Logo

Rubber Logo Mats feature molded no-slip ribs and logo, stay-put bottom and durable rubber construction, making them the best mats you can get for the price. Your mats will come with the correct year-specific logo.

53-62 Rubber Logo Mats - set..... **$142.99**

Basic Black Econo Floor Mats

A lightweight, economical version of our luxury mats. No logo. Available in Black only.

47300 58-62 Floor Mats - Basic Black Econo..... **$40.99**

WARNING: Cancer and Reproductive Harm — www.P65Warnings.ca.gov

#409235

Trunk Mats - Vinyl

Original Appearance Top & Underside, with all Original Markings. The Top Color is Molded In, Not Painted. An Attractive Padded Utility Cover is included at No Charge, to Preserve the Trunk Mat's Show Quality while in use. The Trunk Mat is Shipped Flat to Eliminate Packaging Distortion.

43257	56-57	Trunk Mat - Black	$387.99
43256	56-57	Trunk Mat - Red	$397.99
43258	58	Trunk Mat - Black	$387.99
43264	58	Trunk Mat - Blue	$397.99
43259	58	Trunk Mat - Red	$397.99
43260	59	Trunk Mat - Black	$387.99
43265	59	Trunk Mat - Blue	$397.99
43261	59-60	Trunk Mat - Red - 60 Early	$397.99
43266	59	Trunk Mat - Turquoise	$397.99

1960 cars made up to VIN 4700, trunk mats were the same for power & non-power top cars. After VIN 4700, non-power top cars had a change to the division panel resulting in a change to the template for the trunk mat.

43262	60	Trunk Mat - Black	$387.99
43267	60	Trunk Mat - Blue	$397.99
43263	60	Trunk Mat - Red	$397.99
43268	60	Trunk Mat - Turquoise	$397.99
40266	61-62	Trunk Mat - Black - Exact Reproduction	$417.99
40271	61-62	Trunk Mat - Red - Exact Reproduction	$417.99

Trunk Mats - Carpet

502504	58	Trunk Mat - Daytona - Gray	$99.99
502507	58-60	Trunk Mat - Daytona - Blue	$99.99
502520	58-60	Trunk Mat - Daytona - Black	$99.99
502535	58-60	Trunk Mat - Daytona - Red	$99.99
502702	58-60	Trunk Mat - Loop - Red	$92.99
502720	58-60	Trunk Mat - Loop - Black	$92.99
502606	58-60	Trunk Mat - Tuxedo - Turquoise	$92.99
502607	58-60	Trunk Mat - Tuxedo - Blue	$92.99
502620	58-60	Trunk Mat - Tuxedo - Olive Black	$92.99
502635	58-60	Trunk Mat - Tuxedo - Red	$92.99
502902	61-62	Trunk Mat - Loop - Red	$99.99
502920	61-62	Trunk Mat - Loop - Black	$99.99
502807	61-62	Trunk Mat - Tuxedo - Blue	$129.99
502809	61-62	Trunk Mat - Tuxedo - Fawn	$129.99
502820	61-62	Trunk Mat - Tuxedo - Olive Black	$129.99
502835	61-62	Trunk Mat - Tuxedo - Red	$129.99

Hardtop Headliners

MADE BY Corvette America

All 1961-1962 Headliners were white. Corvette America also offers 1961-1962 Headliners in all 1961-1962 interior colors.

For 1961-62 White, use color code **65**.

4090_	56-57	Hardtop Headliner	$254.99
4091_	58	Hardtop Headliner	$458.99
4092_	59-62	Hardtop Headliner	$289.99
K1369	53-62	Hardtop Header Trim Screw Set	$2.99
K1195	56-62	Headliner Trim Screws - 8 pc	$3.99
8568	53-62	Interior Spray Adhesive	$29.99

#9028 1961-62 Trunk Liner

Trunk Liners

9026	56-60	Trunk Liner - Red	$50.99
9027	56-60	Trunk Liner - Black	$50.99
9028	61-62	Trunk Liner - Black	$50.99
9029	61-62	Trunk Liner - Red	$50.99
27825	56-57	Trunk Liner - Molded - w/o Power Top *	$152.99
27826	57-60	Trunk Liner - Molded - w/ Power Top *	$152.99
27827	58-60	Trunk Liner - Molded - w/o Power Top (60E) *	$152.99
27828	60	Trunk Liner - Molded - w/o Power Top (60L) *	$152.99
27829	61-62	Trunk Liner - Molded - w/ Power Top *	$152.99
27830	61-62	Trunk Liner w/o Power Top - Correct *	$152.99
32902	56-62	Trunk Liner Mount Brackets - pr	$16.99
27831	59-62	Trunk Liner "S" Clips - set of 4 (59L)	$8.99
35622	56-59	Trunk Liner Screws & Lockwashers	$7.99
K1309	60-62	Trunk Liner Screws - Correct - 10 pc set	$2.99

*** Available in Black Only.**

IN STOCK & READY FOR SHIPPING!

In addition to our regular delivery, we offer more options for getting your packages when you need them. Call our Sales Reps for details.

800-458-3475
CorvetteAmerica.com

WARNING: Cancer and Reproductive Harm — www.P65Warnings.ca.gov

#407435

#407409

Sun Visors

Corvette America Sun Visors are correct in every detail and available in all original colors.

4074_ 59-62 Sun Visors - pr $119.99

#35169

#43503

#0943

Sun Visor Hardware

0943 59-62 Sun Visor Hardware Kit $15.99
K1054 59-62 Sun Visor Screws, Visor to Windshield - 4 pc..... $5.99
43503 59-62 Sun Visor Screw - thru Visor $2.99
35169 59-62 Visor Nut Screwdriver - Special Tip $9.99

Deck Protectors

Eliminates Scratches! Deck Protectors prevent scratches by covering the area where your top comes in contact with your rear deck. Made of static cling film, they require no adhesives and they're die-cut specifically for your model year!

21540 56-62 Softtop - Clear..... $27.99
21541 56-62 Softtop - Black..... $27.99
21542 56-62 Hardtop - Clear..... $27.99
21543 56-62 Hardtop - Black..... $27.99

#429707

#23542

Convertible Top Lid Tabs

Covers the gap between top & top compartment, when top is folded down. Sold in pairs.

4295_ 56-57 Convertible Top Lid Tabs - pr $50.99
4296_ 58 Convertible Top Lid Tabs - pr $86.99
4297_ 59-62 Convertible Top Lid Tabs - pr $45.99
K1060 56-62 Top Lid Tab Screws - 8 pc set..... $3.99
35620 56-62 Top Lid Tab Snaps - On Body - pr $2.99

Convertible Rear Window Pillow

Our soft, foam-filled Rear Window Pillow prevents damage to your convertible's rear window when it's stowed. When your top is folded away the window wraps smoothly around the Rear Window Pillow to eliminate unsightly folds, creases and scratches.

X2581 56-62 Convertible Rear Window Pillow..... $13.99

RaggTop Vinyl Protectant & Cleaner

Made especially for your vinyl top, the RaggTop Convertible Top Care Kit cleans and protects your top without harming paint, chrome, glass or plastic windows. RaggTopp Protectant blocks UV rays & repels dust, grease, dirt and mildew to provide comprehensive protection.

43526 RaggTopp Vinyl Top Protectant $18.99
44326 RaggTopp Vinyl Top Cleaner and Protectant Set..... $32.99

WARNING: Cancer and Reproductive Harm — www.P65Warnings.ca.gov

Serving the Corvette Community Since 1977.

1956-1962 Convertible Tops

All Corvette America Convertible Tops are manufactured with these original features:

- Electro-Sealed or Sewn Rear Window, accurate for each model year
- Strong, 35-40 ounce factory-grade material
- Clear, high-visibility windows

All Corvette America Convertible Tops also include:

- Convertible Top Pads
- Convertible Top Window Straps
- Wire-On Trim Strip
- Trim Strip End Cap Set

8 YEAR Warranty

Kee Auto Top Convertible Tops

7808	56-57	Convertible Top - Beige	$325.99
7806	56-58	Convertible Top - Black	$350.99
7960	59	Convertible Top - Black	$366.99
7809	60	Convertible Top - Black	$387.99
7812	61-62	Convertible Top - Black	$387.99
7807	56-58	Convertible Top - White	$350.99
7979	59	Convertible Top - White	$366.99
7810	60	Convertible Top - White	$387.99
7813	61-62	Convertible Top - White	$387.99

Convertible Tops with Production Date Embossing Option

Includes "Dealer Do Not Remove" Tag and Window-Embossed Washing Instructions. Specify year and month of production when ordering.

Note: Like all custom orders, dated convertible tops are non-returnable. Allow 2-3 weeks for delivery. Order must be pre-paid.

3770	56-57	Beige	$387.99
3771	56-58	Black	$387.99
3780	59	Black	$448.99
3773	60	Black	$448.99
3775	61-62	Black	$448.99
3772	56-58	White	$387.99
3781	59	White	$432.99
3774	60	White	$448.99
3776	61-62	White	$448.99

Convertible Tops - Stayfast - Al Knoch

7894	56-58	Convertible Top - Stayfast - Tan/Tan	$489.99
7895	56-60	Convertible Top - Stayfast - Tan/Black	$489.99
7896	56-60	Convertible Top - Stayfast - Black	$489.99
7909	61-62	Convertible Top - Stayfast - Black	$489.99
7910	61-62	Convertible Top - Stayfast - Tan/Black	$489.99

Convertible Top Kits - Al Knoch

7889	56-58	Convertible Top Kit - Black	$269.99
7890	56-58	Convertible Top Kit - White	$269.99
7891	56-58	Convertible Top Kit - Tan/Tan	$611.99
7892	56-58	Convertible Top Kit - Tan/Black	$269.99
7893	56-58	Convertible Top Kit - Horizon Blue	$600.99
7897	59	Convertible Top Kit - Black	$397.99
7898	59	Convertible Top Kit - White	$397.99
7899	59	Convertible Top Kit - Blue	$600.99
7900	59	Convertible Top Kit - Turquoise	$600.99
7903	60	Convertible Top Kit - Black	$397.99
7904	60	Convertible Top Kit - White	$397.99
7905	60	Convertible Top Kit - Blue	$600.99
7906	60	Convertible Top Kit - Turquoise	$600.99
7907	61-62	Convertible Top Kit - Black	$397.99
7908	61-62	Convertible Top Kit - White	$379.99

#7153 1956-57 Convertible Top Pads

Convertible Top Pads

7153	56-57	Convertible Top Pads - pr	$62.99
7154	58-60	Convertible Top Pads - pr	$62.99
7155	61-62	Convertible Top Pads - pr	$62.99

Look for our name on the box!

We provide many of our products to other Corvette parts suppliers.

800-458-3475
CorvetteAmerica.com

WARNING: Cancer and Reproductive Harm — www.P65Warnings.ca.gov

Coffman Corvette Convertible Tops

Complete Coffman convertible tops includes the following:

- New original style top material Installed on frame
- Pads • Straps • New front latches
- New rear swinging latches
- Weatherstrip • New bushings/hardware
- New tack strip — original style fiber board
- Powder coated finish

53320	56-60 Convertible Top - Complete Black Stafast	$4584.99
53321	56-60 Convertible Top - Complete White Stafast	$4584.99
53322	56-60 Convertible Top - Complete Tan Stafast	$4584.99
53323	61-62 Convertible Top - Complete Black Stafast	$4584.99
53324	61-62 Convertible Top - Complete White Stafast	$4584.99
53325	61-62 Convertible Top - Complete Tan Stafast	$4584.99
53332	56-60 Convertible Top - Complete Black Vinyl	$4380.99
53333	56-60 Convertible Top - Complete White Vinyl	$4380.99
53334	61-62 Convertible Top - Complete Black Vinyl	$4380.99
53335	61-62 Convertible Top - Complete White Vinyl	$4380.99

#23542

#22165

#23321

Convertible Top Hardware

23321	56-62 Convertible Top Trim Tab Snaps - Chrome - pr	$8.99
22165	56-60 Convertible Top Tack Strip Kit	$60.99
22166	61-62 Convertible Top Tack Strip Kit	$55.99
7392	56-62 Convertible Window Straps - pr	$17.99
23542	56-62 Wire-On Trim Strip End Cap Set - Includes: 2 Endcaps w/ Screws	$10.99

We Manufacture the Best Quality Corvette Products at our facility in Reedsville, Pennsylvania.

American Made for an American Classic.

WARNING: Cancer and Reproductive Harm — www.P65Warnings.ca.gov

Serving the Corvette Community Since 1977.

1953-1962 PARTS

#20875 1956-57

#20876 1x4 Sealed

#20877 2x4 Sealed

#27204 2x4 Sealed

#27213

#27200

#35323

#35324

#27205

#27206

#42542

#32936

Air Cleaners

Air Cleaners

20875	56-57	2x4 - pr	$264.99
20889	56-57	2x4 - ea	$134.99
20876	58-60	1x4 - Sealed	$244.99
20877	58-60	2x4 - Sealed	$277.99
20879	60-61	2x4 - Open, Foam Element	$335.99
27204	60-61	2x4 - Open, Paper Element	$276.99
20878	60-62	1x4 - Open, Foam Element	$272.99
27203	60-62	1x4 - Open, Paper Element	$251.99

Air Cleaner Components

27205	60-62	Air Cleaner Base 1x4	$86.99
27206	60-62	Air Cleaner Base 2x4	$80.99
41083	55-57	Air Cleaner to Carb Gasket - WCFB	$6.99
27208	56-61	Air Cleaner to Carb Gaskets - 2x4 - pr	$9.99
27207	58-62	Air Cleaner to Carb Gasket - 1x4 - WCFB & AFB	$2.99
42542	53-55	Air Cleaner Elements - Bullet - 3 pc	$37.99
27211	60-62	Air Cleaner Element - Foam	$19.99
27213	60-62	Air Cleaner Element - Paper - Replacement	$12.99
27212	60-62	Air Cleaner Element Zig-Zag Wire	$37.99
35323	60-62	Air Cleaner Lid Only - 1x4	$173.99
35324	60-61	Air Cleaner Lid Only - 2x4	$215.99
27209	55-62	Air Cleaner Stud w/ Wingnut - Exc. 2x4 - each	$5.99
32650	56-57	Air Cleaner Studs w/ Wingnuts - 2x4 - pr	$13.99
27210	58-61	Air Cleaner Studs w/ Wingnuts - 2x4 - pr	$9.99
32936	62	Air Cleaner Stud - 300 & 340HP	$7.99
27200	56-62	Air Cleaner Wingnut	$2.99
27224	56-62	Block Off Plate - Non FI Cars	$21.99
32932	56-62	Road Draft Tube Bolt Kit & Seal	$7.99

56-62 NON-FI AIR CLEANER (61 2X4 SEALED SHOWN)

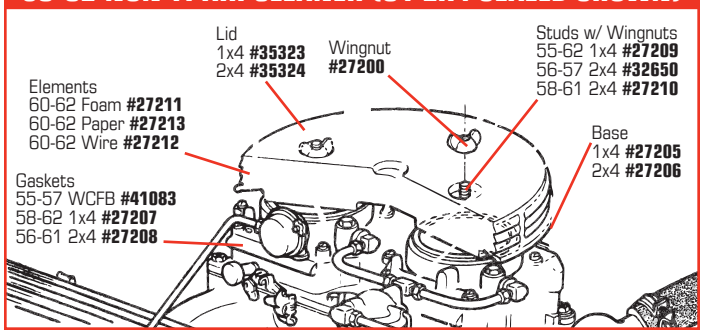

800-458-3475
CorvetteAmerica.com

WARNING: Cancer and Reproductive Harm — www.P65Warnings.ca.gov

1958-1962 FI AIR CLEANER

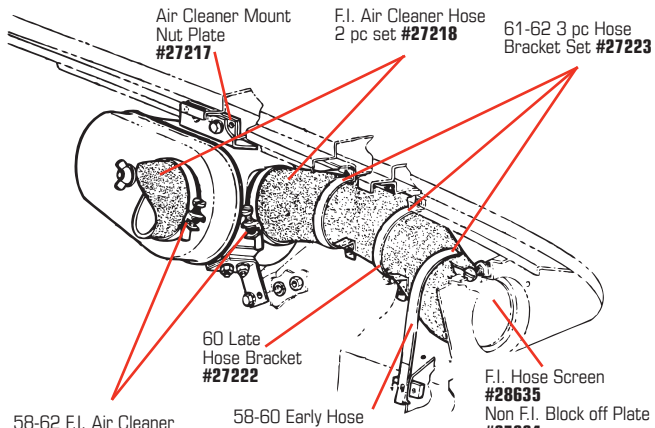

Fuel Injection Air Cleaners

27215	58-62	Adapter	$191.99
35328	58-62	Adapter Gasket	$5.99
35325	57	Cover	$134.99
35326	57	Element	$21.99
27216	58-61	Element - Exact Reproduction	$82.99
43731	62	Element	$54.99
27217	58-62	Fender Mount Bracket Plate	$31.99
28635	56-62	F.I. Fresh Air Hose Inlet Screen w/ Screws	$23.99
27218	58-62	Hoses - 2 pc	$53.99
27221	58-60	Hose Bracket - 1960 Early	$14.99
27222	60	Hose Bracket - 1960 Late	$12.99
27223	61-62	Hose Brackets - 3 pc	$37.99
27219	58-62	Hose Clamp - Correct	$26.99

Battery

#0997

#20679

#25030

Battery Components

20670	55-61	Battery Cables - Clamp Style - pr	$102.99
20671	62	Battery Cables - Spring Ring - pr	$102.99
25030	53-62	Battery Disconnect Switch - Top Post model	$9.99
35330	53-55	Battery Retainer (55 6-Volt)	$30.99
0997	56-62	Battery Shield/Retainer	$23.99
35329	53-55	Battery Tray (55 6-Volt)	$82.99
1549	56-62	Battery Tray	$73.99
25304	56-61	Battery Tray Kit	$98.99
25305	62	Battery Tray Kit	$100.99
K1232	56-61	Bolt/Nut Kit	$11.99
K1220	62	Bolt/Nut Kit	$11.99
25301	56-62	Hold-Down Spacers, 4 pc set	$4.99
0609	53-62	J-Bolt	$3.99
0005	53-62	Terminal Felt	$1.99
K1205	62	Battery Hold Down Wingnuts - pr	$1.99

1956-1962 BATTERY

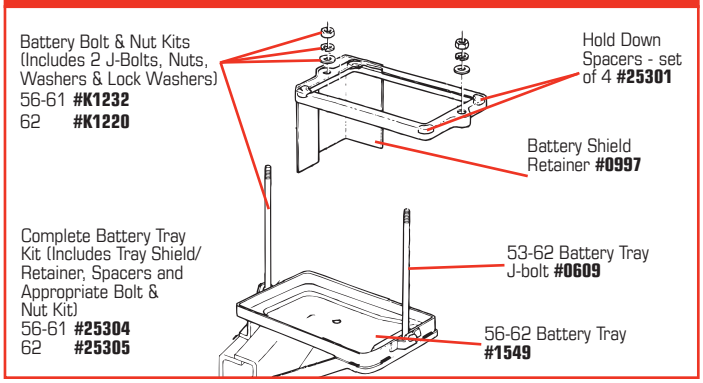

Brakes

#1541

#40377

#30034

#0870

#32652

#8120

Brake Components

32652	56-62	Brake Pedal Clevis Pin	$10.99
0011	55-57	Brake Pedal Pad	$10.99
0870	58-62	Brake Pedal Pad	$8.99
32651	53-62	Brake Pedal Return Spring - Under Dash	$9.99
32653	56-62	Brake Pedal Spring Plate	$7.99
27291	56-62	Brake Pedal Bushing Set, Automatic - 2 pc	$11.99
27292	56-62	Brake Pedal Bushing Set, Manual - 4 pc	$19.99
30034	58-62	Brake Light Switch	$9.99
41098	58-62	Brake Light Switch Bracket	$16.99
K1354	56-62	Brake Light Switch Mount Nuts - pr	$2.99
40377	53-62	Master Cylinder Cap - 53-61 Replacement	$18.99
32654	53-62	Master Cylinder Cap Gasket	$3.99
8120	53-62	Master Cylinder Connector Kit - Includes Connector Block, Bolt and 2 Gaskets	$48.99
35346	53-62	Master Cylinder Crush Washers - pr	$5.99
27290	53-62	Master Cylinder Firewall Seal	$5.99
K1299	53-62	Master Cylinder Mount Nuts - 6 pc set	$1.99
23184	56-62	Master Cylinder Outlet Nut	$26.99
41084	53-60	Master Cylinder Outlet Nut Washer	$3.99
27288	53-62	Master Cylinder Repair Kit	$26.99
1541	53-62	Master Cylinder - Replacement	$132.99
27289	53-62	Master Cylinder Rod Boot	$6.99

WARNING: Cancer and Reproductive Harm — www.P65Warnings.ca.gov

1953-1962 BRAKE PEDAL & MASTER CYLINDER

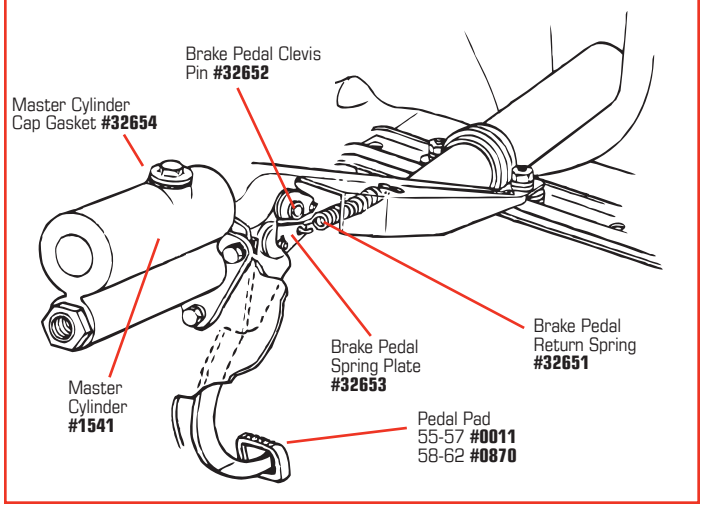

SPEED BLEEDERS

Zinc-coated, stainless-steel Speed Bleeders replace your originals and use a check ball and patented thread sealing system to prevent air from being pulled back into your brake lines. Dust caps included.

40833 56-62 Speed Bleeders - pr $16.99

1956-1962 FRONT BRAKE LINES

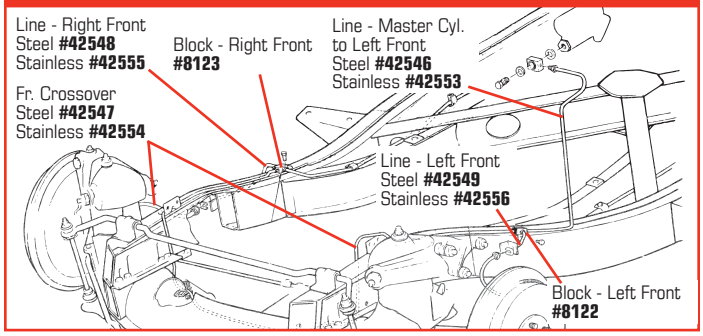

LINES, BLOCKS & RELATED

8140	58-62	Brake/Gas Line Clamp Kit - 11 pc set	$37.99
41095	56	Brake/Gas Line Clip - Double 5/16	$5.99
41096	56-58	Brake/Gas Line Clip - Double 3/8	$6.99
8135	53-62	Brake Hose - Front or Rear - Rubber	$13.99
27302	53-62	Brake Hose Copper Washers - 4 pc set	$4.09
41088	53	Brake Line Set - Steel Early	$101.99
41089	53	Brake Line Set - Steel Late	$101.99
41090	54	Brake Line Set - Steel	$101.99
41091	55	Brake Line Set - Steel	$132.99
8220	56-62	Brake Line Set - Steel - contains all lines from Master Cylinder to Connector Blocks. Clamps & Brake Hoses must be purchased separately	$104.99
9855	56-62	Brake Line Set - Stainless Steel - contains all lines from Master Cylinder to Connector Blocks. Purchase Clamps & Brake Hoses separately	$139.99
42546	56-62	Brake Line - Master Cylinder to LF Block	$20.99
42547	56-62	Brake Line - Front Crossover	$28.99

#9855 1956-62 Steel Brake Line Set

#8122 *#8135* *#8121*

#42625

42548	56-62	Brake Line - Right Front - Steel	$11.99
42549	56-62	Brake Line - Left Front	$11.99
42550	56-62	Brake Line - Front to Rear	$31.99
42551	56-62	Brake Line - Right Rear	$18.99
42552	56-62	Brake Line - Left Rear	$15.99
42553	56-62	Brake Line - Master Cylinder to LF Block - SS	$26.99
42554	56-62	Brake Line - Front Crossover - SS	$39.99
42555	56-62	Brake Line - Right Front - SS	$17.99
42556	56-62	Brake Line - Left Front - SS	$17.99
42557	56-62	Brake Line - Front to Rear - SS	$44.99
42558	56-62	Brake Line - Right Rear - SS	$26.99
42559	56-62	Brake Line - Left Rear - SS	$20.99
41093	58-62	Brake Line Clip - Along Frame Rail	$4.99
41094	53-62	Brake Line Clip - Front Crossover	$7.99
44960	56-57	Brake Line Clip Set - 9 pc	$21.99
41092	58-62	Brake Line Clip Set - 7 pc	$28.99
8122	56-62	Connector Block - Left Front	$20.99
8123	56-62	Connector Block - Right Front	$20.99
8121	53-62	Connector Block - Rear Axle	$20.99
27591	56-62	Connector Block to Frame Bolts - Front - 4 pc	$3.99
41753	53-62	Disc Brake Line Kit w/ Valve	$326.99
42627	53-62	Line Kit - for Power Brake Booster	$24.99
42628	53-62	Line Kit - for Master Cylinder Conversion Kit	$24.99
42625	53-62	Proportioning Valve Kit Disc/Drum	$142.99
42626	53-62	Proportioning Valve Kit Disc/Disc	$142.99
8136	53-62	Spring Clip - Brake Hose to Connector Block	$1.09

WARNING: Cancer and Reproductive Harm — www.P65Warnings.ca.gov

#27293

#32655

#27297

#25671

#27295

Drums, Shoes, Wheel Cylinders & Related

32658	53-62	Brake Adjust Hole Covers - Metal - 4 pc	$5.99
35337	53-62	Brake Adjuster Star Wheel	$10.99
1636	53-62	Brake Bleeding System	$9.99
36998	56-62	Brake Bleeder Valve - F or R - Replacement	$4.99
35341	53-62	Brake Bleeder Valve Set - Correct - 5/16" x 24" - Original style for replace. wheel cylinder - 4 pc	$46.99
35342	53-62	Brake Bleeder Valve Set - 3/8" x 24" - Original style for original wheel cylinder - 4 pc set	$46.99
51047	55-62	Master Cylinder Bleeder Tool	$37.99
27293	55-62	Brake Drum, Front or Rear	$63.99
27294	53-62	Brake Drum Coil Spring	$15.99
41085	56-62	Brake Overhaul Kit (hoses, hardware, shoes, wheel cylinders, adjusters, springs & clips)	$269.99
27295	53-62	Brake Shoes - Front Axle Set	$51.99
27296	53-62	Brake Shoes - Rear Axle Set	$64.99
35335	56-62	Brake Shoe Hardware Kit - Front Axle Set	$23.99
35336	56-62	Brake Shoe Hardware - Front	$10.99
32655	53-62	Brake Shoe Hardware Kit - Rear Axle Set	$24.99
32656	53-62	Brake Shoe Hardware - Rear	$6.99
35333	53-62	Brake Shoe Retainer	$13.99
34887	53-62	Brake Shoe Spreader Bars - Rear - pr	$34.99
27297	53-62	Wheel Cylinder - Front LH - 1 1/8"	$23.99
27637	53-62	Wheel Cylinder - Front RH - 1 1/8"	$23.99
35338	53-55	Wheel Cylinder - Rear	$26.99
27298	56-62	Wheel Cylinder - Rear LH - 1" (except HD)	$19.99
27638	56-62	Wheel Cylinder - Rear RH - 1" (except HD)	$19.99
34892	56-62	Wheel Cylinder Bolts - Rear - 4 pc set	$3.99
46868	53-65	Wheel Cylinder Pins - 8 Required	$4.99
50823	53-59	Wheel Cylinder Rebuild Kit - Front	$4.99
34885	56-62	Wheel Cylinder Rebuild Kit - Rear - No Pistons	$5.99
50945	60-62	Wheel Cylinder Seal Kit - Front w/o Piston	$6.99
41086	53-59	Wheel Lug Stud - Front 1 5/8"	$8.99
41087	53-62	Wheel Lug Studs - Rear 1 3/8" - 5 pc set	$14.99
36906	60-62	Wheel Lug Stud - Front 1 7/8"	$2.99
49423	53-62	Wheel Lug Stud Kit - 5 pc set	$10.99

Parking Brake

32663	53-62	Connecting Clevis - Rear Park Brk Cable - 3 req'd	$7.99
35351	53-62	Fr. Park Brake Cable Retn. Spring Clip on Firewall	$8.99
0233	53-62	Park Brake Cable - Front	$50.99
0252	56-62	Park Brake Cable - Rear - 2 Required	$50.99
28842	56-62	Park Brake Cable - Rear - 2 Required - Correct	$75.99
41097	56-62	Park Brake Cable Kit - Includes Front Cable, 2 Rear Cables, Firewall Retainer, Return Spring, 2 "U" Clips, & Pivot Bolt Kit	$183.99
32662	53-62	Park Brake Cable Pivot Bolt & Adjust. Nut Kit	$9.99
25671	53-57	Park Brake Handle - Chrome w/ Set Screw	$20.99
25672	53-57	Park Brake Handle - Black w/ Roll Pin	$20.99
50526	58-62	Park Brake Handle - Black Letter	$45.99
K1310	53-62	Park Brake Handle Mount Kit - 12 pc	$3.99
35350	53-62	Park Brake Handle Nut/Washer on Firewall	$22.99
34991	53-62	Park Brake Handle Spring & Pawl Set	$17.99
32661	58-62	Park Brake Handle Stop Pin	$9.99
27301	53-62	Park Brake Lever, On Frame	$27.99
35353	53-62	Park Brake Lever Pivot Stud w/ Nut and Washer - Weld to X-Frame	$15.99
32660	53-62	Park Brake Lever Return Spring	$10.99
30023	58-62	Parking Brake Light Switch	$75.99
34888	53-62	Park Brake Shoe Levers & Pin Kit	$73.99
32657	53-62	Park Brake Spreader Bar Springs - pr	$3.99
35352	53-62	Rear Park Brake Cable Boot	$10.99

1953-1962 PARKING BRAKE HANDLE

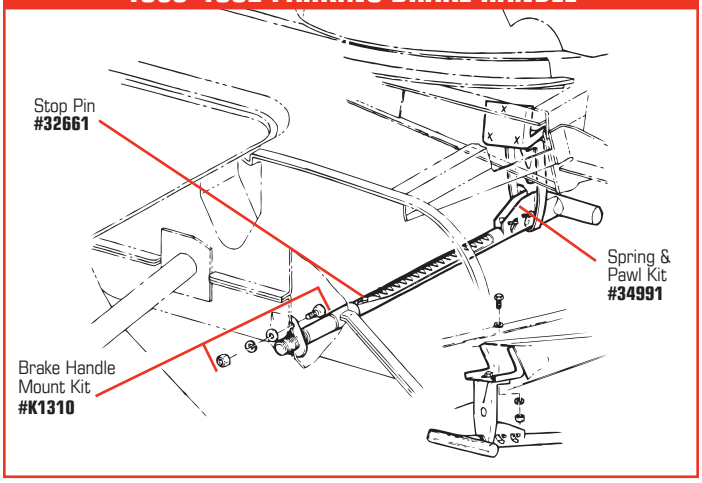

1953-1962 PARKING BRAKE

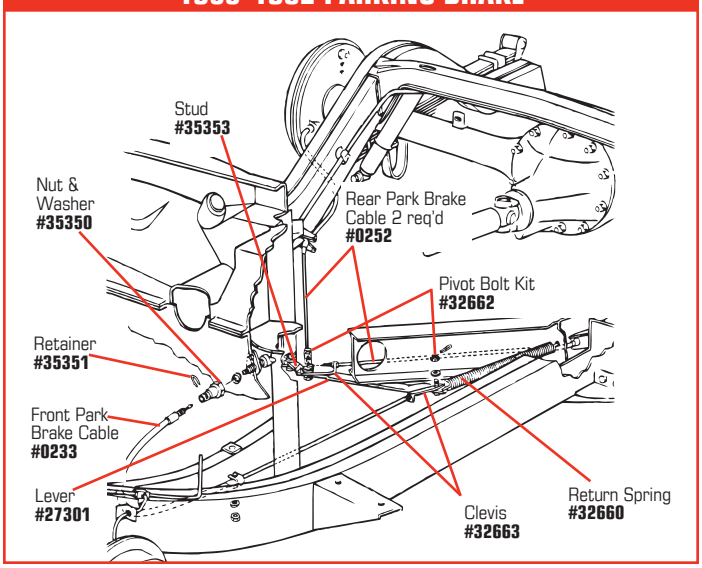

DUAL MASTER CYLINDER CONVERSION KIT

Convert to a dual master cylinder configuration without altering your Corvette's firewall or hood for clearance. Mounting bracket attaches to stock location on firewall. Kit comes with new master cylinder, mounting bracket, adjustable pushrod and hardware.

42544 53-62 Single-to-Dual Master Cylinder Conversion Kit.... **$305.99**

FRONT DISC BRAKE CONVERSION KIT

This kit bolts on easily with stock spindles and features a special adapter that mounts a manual, dual master cylinder without modifying your firewall or hood. Kit includes: Caliper Brackets, New GM Calipers w/ Pads, Bearings, Seals & Dust Covers, Rotors, Brake Hoses, New Dual Master Cylinder, Pushrod & Proportioning Valve.

NOTE: Kit fits 1953-62 Corvette spindles but dual master cylinder will not fit 1953-55 with original engine or 1956-62 with stock fuel injection.

41752 53-62 Front Disc Brake Conversion Kit **$978.99**
42042 53-62 Front Disc Brake Conversion Kit - Power **$1060.99**
41753 53-62 Disc Brake Line Kit W/Valve (req'd)..... **$326.99**

Corvette America

Gift Certificates

*Delivered **FREE** via First-Class Mail.*

A Great Gift for any Corvette Enthusiast!

GC025 $25 Certificate..... **$25**
GC050 $50 Certificate **$50**
GC100 $100 Certificate **$100**
GC200 $200 Certificate **$200**
GC300 $300 Certificate **$300**
GC400 $400 Certificate **$400**
GC500 $500 Certificate **$500**

Gift Certificates are Non-Transferable and Non-Refundable.

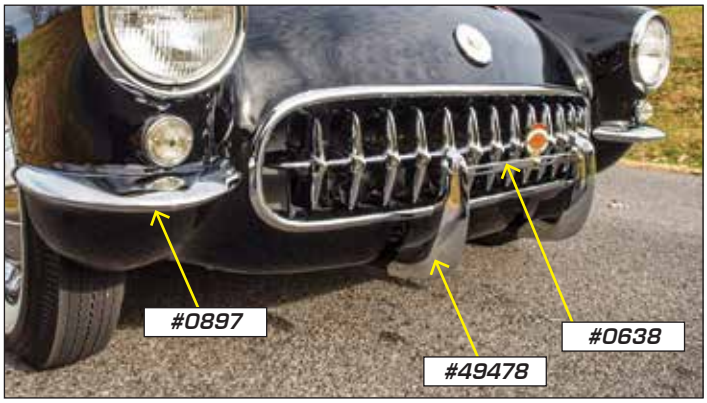

FRONT BUMPERS & HARDWARE

41099 53-55 Front Bumper - Vertical **$314.99**
41100 53-55 Front Bumper - Inner Horizontal **$267.99**
41101 53-55 Front Bumper - Outer Horizontal **$314.99**
41102 53-55 Front Bumper - Center Bullet **$314.99**
27319 56-62 License Plate Mount Kit - Rear **$2.99**
27320 56-62 License Plate Rubber Bumper **$1.99**
27322 61-62 License Plate Mount Special Nut - Rear..... **$36.99**
0897 56-57 Front Crescent Bumper **$212.99**
49477 53-55 Front License Bumpers - pr **$279.99**
49478 56-57 Front License Bumper **$253.99**
0642 53-57 Front License Bumper Brackets..... **$83.99**
0643 53-57 Front License Bumper Supports **$50.99**
K1349 53-57 Front License Bumper Bolt Kit - 28 pc **$12.99**
0638 53-57 Front License Cross Bar **$40.99**
0639 53-57 Front License Supports & Brackets - pr..... **$114.99**

REAR BUMPERS & HARDWARE

41103 53-55 Rear Bumper - Inner Horizontal **$267.99**
41104 53-55 Rear Bumper - Outer Horizontal **$343.99**
41105 53-55 Rear Bumper - Vertical..... **$267.99**
41106 53-55 Rear Bumper - Center Bullet..... **$314.99**
41107 53-55 Rear Bumper - Center Horizontal..... **$782.99**
27305 56-57 Rear Bumper Block and Bushing Set - 4 pc..... **$26.99**
27306 56-57 Rear Bumper Center Brace..... **$75.99**
27348 53-57 Rear Bumper Brace to Body Seals - pr..... **$23.99**
25323 56-57 Rear Exhaust Chrome - 6 pc set..... **$636.99**
25321 56-57 Rear Exhaust Chrome - Center..... **$121.99**
25322 56-57 Rear Exhaust Chrome - Lower..... **$153.99**
25320 56-57 Rear Exhaust Chrome - Upper..... **$72.99**
28645 56-57 Rear License Bracket - T **$29.99**
27304 56-57 License Lamp Assemblies - pr..... **$116.99**
27318 56-60 Rear License Bracket Mount Kit **$10.99**
27586 56-57 Tailpipe Retainers - Mount in Exhaust - Chrome... **$67.99**

800-458-3475
CorvetteAmerica.com

WARNING: Cancer and Reproductive Harm — www.P65Warnings.ca.gov

1956-1957 REAR EXHAUST CHROME

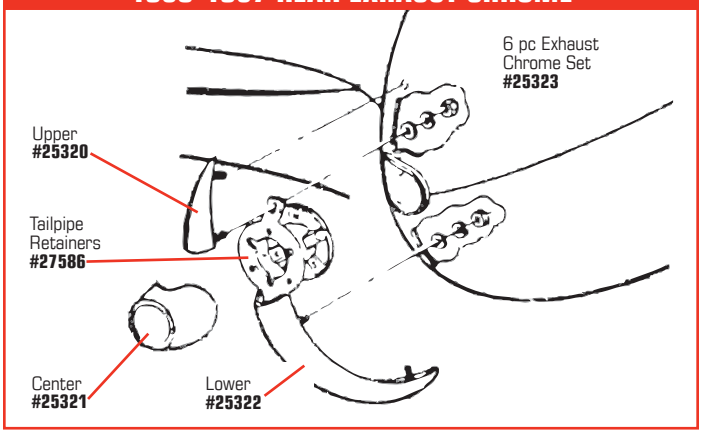

1956-1957 REAR BUMPER

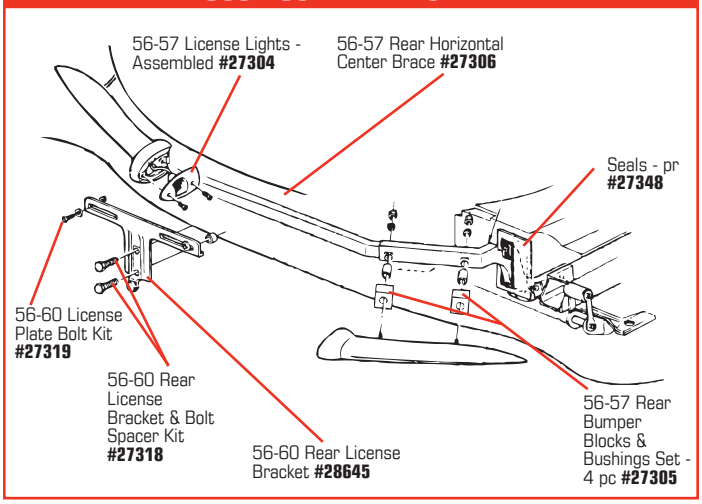

1958-1962 FRONT BUMPER

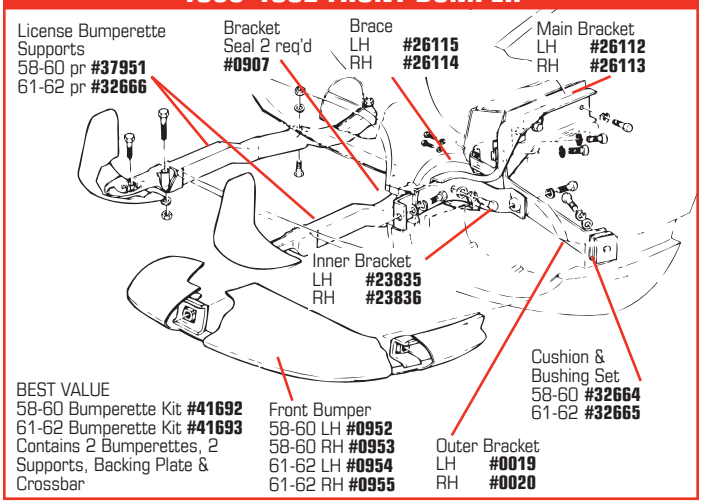

Front Bumpers & Hardware

26106	58-62	Front Bumper "M" Headmark Bolts - pr	$8.99
26108	58-62	Front Bumper Bolt Kit.	$28.99
K1459	58-62	Front Brackets to Bumper Bolt Kit - 16 pc set	$45.99
26107	58-62	Front License Bumper Bolt Kit	$12.99
0952	58-60	Bumper - Front - LH	$672.99
0953	58-60	Bumper - Front - RH	$636.99
0954	61-62	Bumper - Front - LH	$690.99
0955	61-62	Bumper - Front - RH	$690.99
26115	58-62	Bumper Bracket, Front Brace, LH	$22.99
26114	58-62	Bumper Bracket, Front Brace, RH	$22.99
23835	58-62	Bumper Bracket, Front Inner, LH	$22.99
23836	58-62	Bumper Bracket, Front Inner, RH	$22.99
26112	58-62	Bumper Bracket, Front Main, LH	$68.99
26113	58-62	Bumper Bracket, Front Main, RH	$68.99
0019	58-62	Bumper Bracket, Front Outer, LH	$42.99
0020	58-62	Bumper Bracket, Front Outer, RH	$42.99
0907	58-62	Bumper Bracket Seal, Front - 2 req'd	$9.99
32664	58-60	Bumper Mounting Cushion & Bushing Set - Front & Rear	$32.99
32665	61-62	Bumper Mounting Cushion & Bushing Set - Front Only	$15.99
43733	58-62	Bumper Mounting Shim Kit	$3.99
27312	58-60	Bumper Bracket - Inner	$62.99
27311	58-60	Bumper Bracket - Outer LH	$37.99
27641	58-60	Bumper Bracket - Outer RH	$37.99
27313	58-60	Bumper Bracket to Frame Brace	$81.99
32664	58-60	Bumper Mounting Cushion & Bushing Set - Front & Rear	$32.99
X2496	58-60	Bumper Rear Seal - 4 req'd	$12.99
41692	58-60	Bumperette Kit - includes LH Front Bumper, RH Front Bumper, Backing Plate, Cross Bar, LH & RH Supports & Bolt Kit	$387.99
41693	61-62	Bumperette Kit - includes LH Front Bumper, RH Front Bumper, Backing Plate, Cross Bar, LH & RH Supports & Bolt Kit	$387.99
49475	58-62	Front License Bumpers	$213.99
37951	58-60	License Bumperette Supports - pr	$86.99
32666	61-62	License Bumperette Supports - pr	$86.99
0032	58-62	License Assembly Backing Plate	$60.99
0033	58-62	License Assembly Cross Bar	$35.99
27319	58-62	License Plate Mount Kit	$2.99
32668	58-62	License Plate Rubber Bumper - Front	$5.99
0871	58-62	Bumper Cushion	$2.99
30419	58-60	Bumperette - LH	$381.99
30420	58-60	Bumperette - RH	$381.99
27314	58-60	License Lamp Assemblies - pr	$116.99
27319	56-60	License Plate Mount Kit	$2.99
27320	56-60	License Plate Rubber Bumper	$1.99
27321	61-62	License Plate Rubber Bumper	$1.99
41113	58-60	Rear Bumper Bolt Kit - Correct 46 pc	$42.99
41114	61-62	Rear Bumper Bolt Set - "WB" 30 pc	$20.99
K1254	58-60	Rear Bumper Mount Bolt Kit - 52 pc - Replace.	$26.99
K1255	61-62	Rear Bumper Mount Bolt Kit - 74 pc - Replace.	$17.99
43733	58-62	Rear Bumper Mount Shim Kit - 4 pc	$3.99
41111	58-60	Rear Bumper Nut Set - Marsden 8 pc	$5.99
41112	58	Rear Bumper Seals - In Trunk - pr	$63.99
28645	58-60	Rear License T Bracket	$29.99
27318	56-60	Rear License Bracket Mount Kit	$10.99
27309	58-60	Rear Vertical Bumper Bracket - 2 req'd	$73.99
27587	58-60	Tailpipe Retainers - Mount in Bumper	$105.99
27310	58-60	Vertical Bumper Bracket to Crossmember Bolt Kit	$8.99

1958-1960 REAR BUMPER

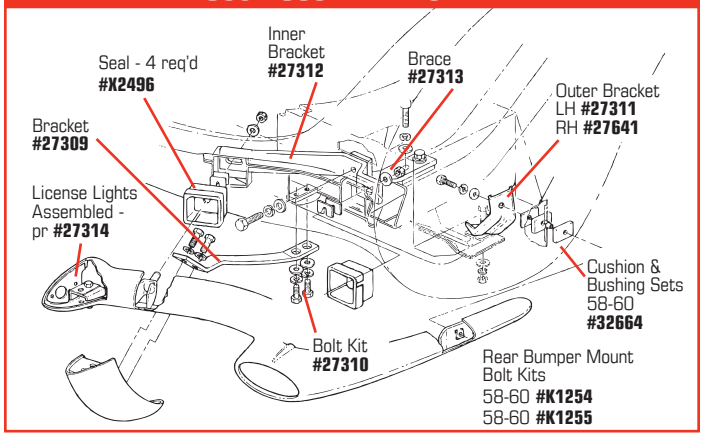

License Bumper Kits
58-60 **#41692**
61-62 **#41693**

#4068

#4075

#42527

#43774

LICENSE PLATES

4068	53-62	Chrome Letters	$14.99
4075	53-62	Chrome Letters & Border	$14.99
42527	53-62	Black w/ Mirrored Crossflags	$30.99
43774	53-62	Mirrored w/ Black Crossflags	$30.99

#27342

#27343

#0052

#0047

#0048

CONSOLE

23035	53-60	Ashtray - 60 Early - Small Snuffer w/o Holder	$43.99
23036	60-62	Ashtray - 60 Late - Large Snuffer w/ Holder	$43.99
35367	56-62	Ashtray Knob	$14.99
27344	56-62	Ashtray Retainer Clips w/ Screws - pr	$11.99
25818	56-62	Circuit Breaker - Power Window/Power Top	$22.99
K1053	58-62	Console Molding Screws - Upper & Lower - 10-pc set	$4.99
23040	58-62	Console Trim - Lower	$53.99
27347	58-62	Console Upper Molding on Dash	$52.99
0047	56-62	Console Plate (Exc 59-62 4 Speed)	$36.99
0048	59-62	Console Plate (4 Speed only)	$36.99
0045	55-62	Shift Boot (Exc 59-62 4 Speed)	$23.99
23029	59-62	Shift Boot (4 Speed only)	$20.99
27339	56-62	Shift Console Plate Retainer Nuts - pr	$4.99
K1058	56-62	Shift Console Screws - pr	$1.99
27342	56-57	Shift Indicator Plate - Automatic	$17.99
0661	58-61	Shift Indicator Plate - Automatic	$17.99
27343	62	Shift Indicator Plate - Automatic	$17.99
27341	56-62	Shift Indicator Plate - 3 Speed	$17.99
0052	59-62	Shift Indicator Plate - 4 Speed	$17.99
K1057	56-62	Shift Indicator Plate Screws - pr	$3.99
0794	56-62	Shifter Knob, White	$9.99
43508	58-62	Shifter Knob w/ 4 Speed Pattern	$9.99

1953-1962 CONSOLE

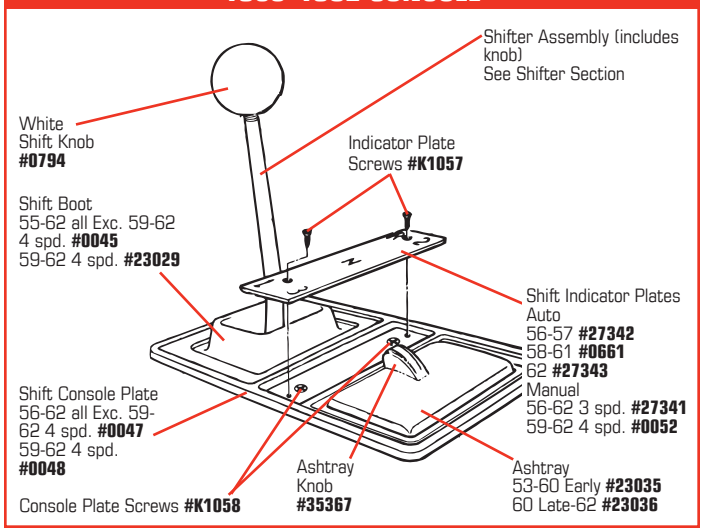

800-458-3475
CorvetteAmerica.com

WARNING: Cancer and Reproductive Harm — www.P65Warnings.ca.gov

BRASS/COPPER RADIATORS

Our Brass/Copper Replacement Radiators are manufactured to increase cooling capacity without increasing costs. The result is a more efficient cooling system that doesn't empty your wallet.

3 Row Core
14 1/8" x 23 3/4" x 2"

X2210 55-60 Early .. **$421.99**

4 Row Core
16 1/2" x 18 3/4" x 2 5/8"

0970 60 Late - 61 Early **$505.99**

4 Row Core
16 1/2" x 18 1/2" x 2 5/8"

X2211 61 Late - 62..... **$473.99**

REPRODUCTION RADIATORS

Stacked Aluminum Design. Original Look. Better Performance.

Reproduced to exact specifications with the stacked aluminum design, these Aluminum Radiators maintain the look of original equipment but perform better – guaranteed to run at least 20 degrees cooler than any aftermarket copper/brass replacement. Backed by a 5-year manufacturer's warranty. Specify build date or VIN # when ordering.

41886 60-61 Radiator w/ Top Tank #3151116 ..... **$1249.99**
41887 61 Radiator w/ Cast Neck w/ Boss **$1089.99**
41888 62 Radiator w/ Cast Neck 2589 w/o Boss **$1089.99**

#52014

#52000

#52015

#52001

DIRECT-FIT ALUMINUM RADIATORS

Our Direct Fit Aluminum Radiators fit the factory hoses and original supports – no cutting, bending or installing different hoses. Each core features a double row of wide, high-quality tubes, louvered fins and press-formed end tanks. Cores are furnace brazed for the ultimate tube-to-header welds without epoxy. Best of all, they cost much less than other Aluminum Radiators. Three-year Manufacturer's Warranty.

Standard Direct-Fit Radiators feature 1" tubes, while High Performance (HP) Direct-Fit Radiators feature 1.25" tubes.

44270 55-60 Direct Fit Aluminum Radiator **$689.99**
44272 61-62 Direct Fit Aluminum Radiator **$579.99**
52000 55-60 Direct Fit Aluminum Radiator w/ Black Ice **$794.99**
52001 61-62 Direct Fit Aluminum Radiator w/ Black Ice **$729.99**
52014 55-60 Direct Fit HP Aluminum Radiator **$859.99**
52015 61-62 Direct Fit HP Aluminum Radiator **$709.99**
52028 55-57 Radiator Module System - SB Manual **$989.99**
52029 58-60 Radiator Module System - SB Manual **$969.99**
52030 61-62 Radiator Module System - SB Manual **$889.99**
43581 55-62 Black Ice Coating **$60.99**

Add **43581** to have your radiator coated with **Black Ice.** This special epoxy will adhere to the natural aluminum and never peal or flake. It is only 3-5 mils thick and it will NOT affect the radiator's ability to dissipate heat. The semi-gloss finish resembles the older enamels used on copper/brass radiators and it will give your engine compartment an OEM look.

#25740

#25742

#25744

#25741

#25743

RADIATOR CAPS

25740 55-57 Radiator Cap - w/ "SM" Logo **$40.99**
25741 58-61 Radiator Cap - "AC-549, 7# RC-1" **$40.99**
25742 60-61 Radiator Cap - Aluminum "AC-362, 13#"..... **$50.99**
25743 61 Radiator Cap - Aluminum "AC-306, 13#"..... **$50.99**
25744 61-62 Radiator Cap - "AC-307, 13#"..... **$40.99**
51147 57-62 Radiator Cap w/ FI - 7 PSI Replacement **$5.99**
51148 55-62 Radiator Cap w/o FI 13 PSI Replacement **$5.99**

WARNING: Cancer and Reproductive Harm — www.P65Warnings.ca.gov

#44645

#27392

#27396

#K1303

#1106

#25333

#27362

#27642

Radiator Fan

27391	56-57	Fan (Correct) Early 57 - 4 Blade	$95.99
27392	57-60	Fan (Correct) Late 57 - 4 Blade	$94.99
1106	60-62	Fan - 5 Blade - 60 FI, all 61-62	$113.99
27393	53-60	Fan Blade Bolt Set - 4 pc	$6.99
44645	60-62	Fan Clutch	$86.99
K1242	60-62	Fan-to-Clutch Nut & Washer Set	$2.99
K1303	60-62	Fan-to-Clutch Studs - 4 pc set	$12.99
27396	60-62	Fan Clutch to Water Pump Bolts - 4 pc	$10.99

1955-1962 FAN, FAN CLUTCH & RADIATOR HOSES

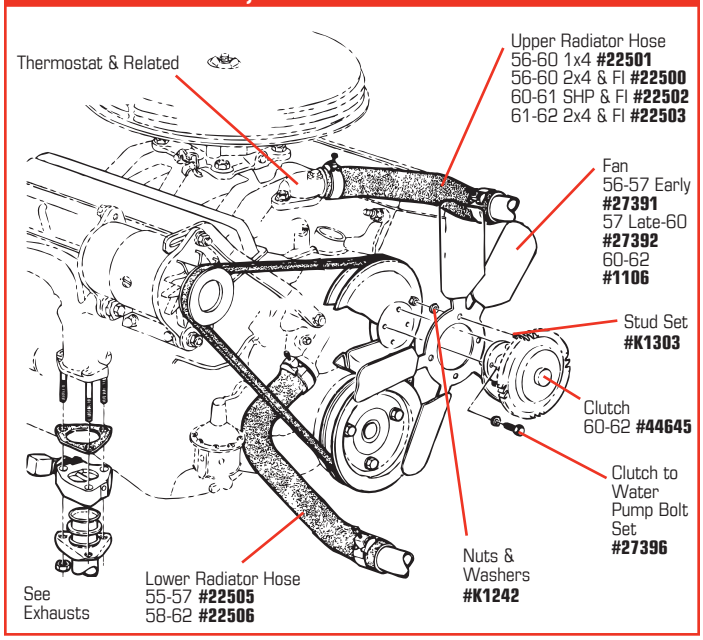

WaterWetter / Radiator Relief

Improves heat transfer to reduce temperature by as much as 30°F in modern aluminum, cast iron, copper, brass and bronze systems! It also protects against rust and corrosion.

40853		WaterWetter	$12.99

Radiator Core Supports

25330	53-57	Radiator Core Support	$352.99
25331	58-60	Radiator Core Support	$352.99
25332	60-61	Radiator Core Support w/ Top Tank Radiator	$384.99
25333	61-62	Radiator Core Support	$395.99
27362	58-62	Radiator Core Support Extension - LH	$70.99
27642	58-62	Radiator Core Support Extension - RH	$70.99
2670	53-62	Support Mount Kit	$20.99

#27368

Shrouds

27368	58-59	Complete Fan Shroud - Upper & Lower - 4 pc	$298.99
27394	56-57	Fan Shroud w/ Screws 4 pc Upper / Lower	$298.99
27374	58-59	Fan Shroud Upper Wide	$212.99
27371	56-62	Fan Shroud & Core Support Bolt Set	$9.99
27370	55-59	Lower Fan Shroud w/ Screws	$106.99
41746	60-62	Lower Fan Shroud - LH	$64.99
41747	60-62	Lower Fan Shroud - RH	$64.99
K1297	58-62	Lower Fan Shroud to Frame Bolts - 4 pc set	$3.99
35358	56-59	Lower Fan Shroud Screws - 9 pc set	$8.99
K1302	60-62	Lower Fan Shroud Screws - 5 pc set	$4.99
42560	55	Upper Fan Shroud	$234.99
27369	56-57	Upper Fan Shroud - Wide	$218.99
27373	60-62	Upper Fan Shroud	$215.99

WARNING: Cancer and Reproductive Harm — www.P65Warnings.ca.gov

Radiator Mount & Drain

27354	60-62	Aluminum Radiator Draincock	$17.99
27355	60-62	Aluminum Radiator Drain Pipe	$13.99
27356	60-62	Aluminum Radiator Drain Pipe Connector	$10.99
27353	56-62	Brass Radiator Draincock - Replacement	$3.99
1041	61-62	Expansion Tank	$209.99
27406	61-62	Expansion Tank - Pressed in Tubes - Dated - Specify build date or VIN# when ordering	$229.99
27407	61-62	Expansion Tank Aluminum Tube Set - 3 pc	$24.99
25743	61	Expansion Tank Cap - "AC, 306, 13#"	$50.99
25744	61-62	Expansion Tank Cap - "AC, 307, 13#"	$40.99
0057	61-62	Expansion Tank Cap - Replacement	$20.99
0575	61-62	Expansion Tank Hose & Clamp Set	$83.99
30911	61-62	Expansion Tank Hose Clamps - 2 pc set	$5.99
32990	56-62	Expansion Tank Overflow Hose	$10.99
35364	61-62	Expansion Tank Overflow Hose Bracket	$4.99
27410	61-62	Expansion Tank Support Bracket to Manifold	$94.99
27411	61-62	Expansion Tank Support Mount Stud	$2.99
27408	61-62	Expansion Tank Strap	$11.99
27409	61-62	Expansion Tank Strap to Bracket Bolt	$2.99
35365	61-62	Expansion Tank to Radiator Hose	$6.99
35366	61-62	Expansion Tank to Water Pump Hose	$6.99
27363	58-62	Lower Radiator Baffle - Fiberglass	$108.99
37364	53-55	Lower Radiator Baffle	$213.99
37390	56-57	Lower Radiator Baffle	$162.99
27364	56-57	Lower Radiator Baffle to Support Bracket	$49.99
27365	58-60	Lower Radiator Baffle to Support Bracket	$49.99
41119	53-55	Lower Radiator Baffle Seal	$51.99
27361	61-62	Lower Radiator Support Bracket w/ Cups	$79.99
27350	56-60	Radiator Drain Petcock w/ Drain Hose	$10.99
27357	61-62	Radiator Mounting Bracket with Cushion & Retainer - Top	$59.99
27358	61-62	Radiator Mounting Cushion - 3 req'd	$2.99
32990	56-62	Radiator Overflow Hose	$10.99
27366	58-62	Radiator Support Seal Set - 3 pc	$10.99
27367	58-62	Radiator Support Side Seals - Hi-Perf - pr	$12.99
27360	60-61	Top Tank Aluminum Radiator Brackets - pr	$204.99
35357	60-61	Top Tank Radiator Sight Hole Plug - Correct	$47.99

Look for our name on the box!

We provide many of our products to other Corvette parts suppliers.

1953-1962 RADIATOR

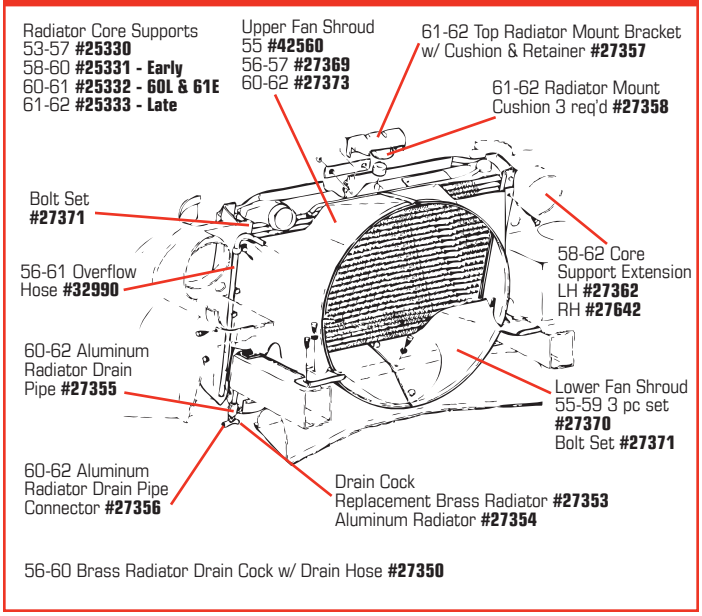

Radiator Hoses

22505	55-57	Lower Radiator Hose	$34.99
22506	58-62	Lower Radiator Hose	$28.99
22501	56-60	Upper Radiator Hose - 1x4	$36.99
22504	61-62	Upper Radiator Hose - 1x4	$28.99
22500	56-60	Upper Radiator Hose - 2x4 & FI - 60 Early	$28.99
22502	60-61	Upper Radiator Hose - SHP & FI - Top Tank - 61E	$31.99
22503	61-62	Upper Radiator Hose - 2x4 & FI - 61 Late	$32.99

1961-1962 RADIATOR EXPANSION TANK

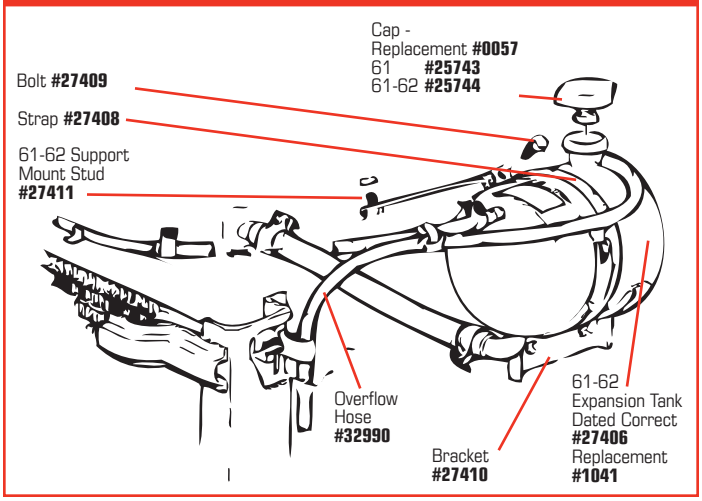

COOLING SYSTEM HOSE CLAMP KITS

All the clamps you need for your radiator, heater, expansion tank and bypass hoses. Identical to originals.

0007	56-57	Hose Clamp Kit - All V-8	$12.99
0010	58-59	Hose Clamp Kit - Early 59	$12.99
0012	59-60	Hose Clamp Kit - Late 59	$22.99
0013	61-62	Hose Clamp Kit - 283 & 327	$22.99
35362	53-62	Spring Ring Hose Clamp Pliers	$30.99

WATER PUMP & RELATED

27383	58-62	Generator Brace/Water Pump Mount Stud	$13.99
27389	56-62	Heater Hose Fitting Adapter - NPT* - 1/2"- 3/8"	$3.99
27390	61-62	Heater Hose Fitting Adapter - NPT* - 3/4"-1/2"	$6.99
27387	56-62	Heater Hose Fitting on Intake 3/8"	$8.99
27388	59-62	Heater Hose Fitting on Intake 1/2"	$7.99
27385	56-58	Lower Water Pump Fitting - Curved 5/8"	$18.99
27386	59-62	Lower Water Pump Fitting - Curved 3/4"	$16.99
27401	56-62	Aluminum Thermostat Housing Stud Set	$8.99
27400	58-62	Cast Aluminum Thermostat Housing, Hi-Perf	$66.99
27397	55-62	Cast Iron Thermostat Housing (Correct)	$62.99
27399	58-62	Cast Iron Thermostat Housing Bolt Kit	$8.99
33643	56-57	Temperature Sending Unit	$26.99
27403	53-62	Thermostat -160 Degree	$7.99
27404	53-62	Thermostat -180 Degree	$5.99
27405	58-62	Thermostat -195 Degree	$5.99
50916	53-62	Thermostat - 205 Degree	$5.99
51099	55-62	Thermostat Housing - Chrome	$15.99
27402	53-62	Thermostat Housing Gasket	$2.99
27384	61-62	Top Water Pump Fitting - 90 Degree	$21.99
35361	59-62	Water Pump Heater Delete Plug - Intake	$3.99
27376	55	Water Pump - Rebuilt - #911 w/o Boss	$88.99
51050	61-62	Water Pump - #608 - Remanufactured	$142.99
51051	55-62	Water Pump - #609 - New	$43.99
41120	56-62	Water Pump Backplate Screw Set - 6 pc	$3.99
27381	55-57	Water Pump Bolt Set - 4 pc	$6.99
27382	58-62	Water Pump Bolt Set - 3 pc	$7.99
27380	56-62	Water Pump Mount Gasket	$1.99
41173	53-54	Water Pump Pulley, 6 Cyl	$90.99
27550	55-56	Water Pump Pulley, Single Groove - 56E	$61.99
27551	56-58	Water Pump Pulley (#974) - 56L - 58E	$115.99
27552	58-62	Water Pump Pulley (#816) - 58L	$101.99
27553	62	Water Pump Pulley, Dual w/ Idler	$356.99
51097	55-62	Water Pump Pulley - Dual w/ Idler - Chrome	$114.99
27554	58-62	Water Pump Pulley Reinforcement (58 Late)	$3.99
27379	56-62	Water Pump Rebuild Kit	$71.99

*NPT = National Pipe Thread

FAST Shipping!

Fast Service & Delivery!

Most orders are processed & shipped the same day!

DASH & GAUGES

#27805

#27807

#23041

#35067

HEATER/DEFROSTER CONTROL COMPONENTS

27804	58-60	Air Inlet Control Cable w/ Knob	$71.99
27806	61-62	Air Inlet Control Cable w/ Knob	$71.99
27812	58-60	Air Inlet/Temperature Control Knob	$24.99
27813	61-62	Air Inlet/Temperature Control Knob	$24.99
27345	58-62	Center Radio/Heater Console, Fiberglass	$244.99
27801	56-62	Defroster Outlet Duct - Nozzle Under Dash	$98.99
23041	58-62	Heater Control/Clock Panel	$96.99
31170	58-62	Heater / Defroster Control Switch Sleeve	$6.99
27808	58	Heater Switch & Defroster Control Knob	$24.99
27838	53-57	Heater Switch Assembly w/ Cable	$213.99
27839	58-62	Heater Switch Assembly w/ Cable	$201.99
25796	56-57	Heater Switch Assembly w/ Cable - Repro	$223.99
25797	58-62	Heater Switch Assembly w/ Cable - Repro	$223.99
27809	59-60	Heater Switch & Defroster Control Knob	$24.99
27810	61-62	Heater Switch & Defroster Control Knob	$34.99
27811	58-62	Heater Switch Nut	$16.99
35067	56-62	Nut Wrench - Heater Cable/Headlight & Wiper Switch	$13.99
27805	58-60	Temperature Control Cable w/ Knob	$71.99
27807	61-62	Temperature Control Cable w/ Knob	$71.99

Look for our name on the box!

We provide many of our products to other Corvette parts suppliers.

1958-1962 HEATER / DEFROSTER CONTROL

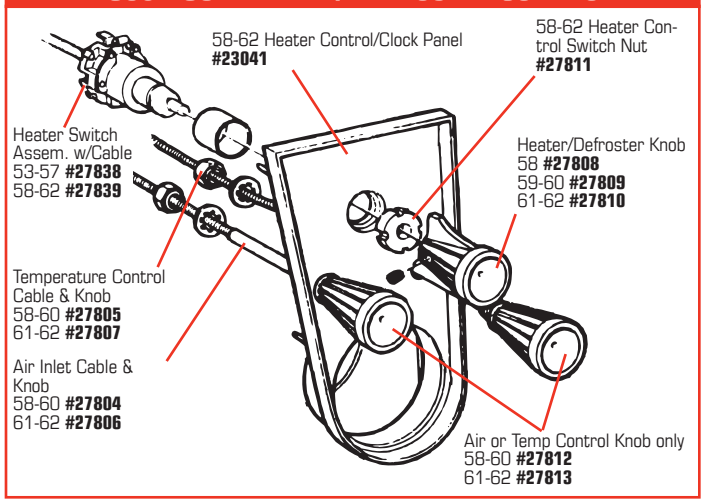

800-458-3475
CorvetteAmerica.com

WARNING: Cancer and Reproductive Harm — www.P65Warnings.ca.gov

#35375

#27430

#0675

#28719

#28649

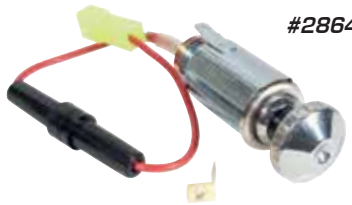

#29124

Dash Knobs, Bezels & Indicators

28650	56-57	Cigarette Lighter w/ Element	$23.99
27430	58-60	Cigarette Lighter w/ Element	$38.99
27432	61-62	Cigarette Lighter w/ Element	$34.99
28640	56-60	Cigarette Lighter Housing	$23.99
27431	58-60	Cigarette Lighter Chrome Spacer	$8.99
27433	58-62	Cigarette Lighter Element Only	$7.99
32404	53-62	Cigarette Lighter Element Bulb Shade	$17.99
27434	58-62	Cigarette Lighter Housing in Dash	$35.99
28649	56-57	Cigarette Lighter w/ Wiring & Housing	$46.99
35380	55-62	Cigarette Lighter Lamp w/ Shield	$19.99
28719	56-62	Cowl Vent Knob	$19.99
28720	58-62	Cowl Vent Lever Link - Riveted to Door	$69.99
28646	61-62	Dash Bezels, Aluminum - 3 pc	$52.99
32746	53-57	Dash Bulb Filter - 2 Green - 1 Red	$10.99
K1298	58-62	Dash Cluster Housing to Dash Screws - 4 pc	$3.99
0675	58-60	Dash Indicators - 4 pc	$43.99
35375	58-60	Dash Knob Set w/o Washers - 3 pc - Headlight, Wiper & Lighter	$96.99
42804	58-62	Dash Support Rods - pr	$12.99
35370	56-57	Emergency Brake Flasher Chrome Plug	$6.99
41122	53-57	Emergency Brake Jewel Spring	$9.99
28652	56-57	Headlight Knob & Rod	$33.99
28653	58-60	Headlight Knob & Rod	$32.99
28654	61-62	Headlight Knob & Rod	$35.99
27418	58-60	Headlight Switch Nut	$14.99
27419	61-62	Headlight Switch Nut	$14.99
42561	56-57	Headlight Switch Spacer - Behind Dash	$11.99
25560	56-57	Ignition Bezel w/ Chrome Backplate (57E)	$16.99
25561	57	Ignition Bezel w/o Backplate (57L)	$12.99
0671	58-62	Ignition Indicator Bezel	$16.99
27413	56-59	Ignition Switch Nut	$9.99
27415	60-62	Ignition Switch Nut	$13.99
34927	56-62	Ignition Switch Nut Wrench	$11.99
27414	58-62	Ignition Switch Spacer/Ferrule	$15.99
35373	56-57	Power Top Switch Knob w/ Shaft	$35.99
25589	56-57	Radio Indicators w/ Bezels - 4 pc set	$33.99
25588	56-57	Radio Indicators Volume/Selector - pr	$26.99
0053	57-58	Shift Indicator Light - 4 Speed	$17.99
35372	58-62	Speedo to Dash Cluster Fasteners - 3 pc set	$3.99
35369	53-57	Steering Column Bezel - Chrome	$67.99
29124	56-57	Wiper Knob	$27.99

Firewall Insulation w/ Fasteners

28714	56-57	Firewall Insulation Standard Trans & Heater	$189.99
28715	59-61	Firewall Insulation - w/o FI, w/ Heater 59L-61 Standard Trans, Heater & Carb	$189.99
28716	58-59	Firewall Insulation - w/ Heater 59E Standard Trans & Heater	$189.99
28717	58-59	Firewall Insulation - w/ FI, w/ Heater 59E Standard Trans & Heater	$189.99
28718	62	Firewall Insulation - w/ Heater Standard Transmission	$222.99
40011	53-54	Firewall Insulation Set	$189.99
40012	55	Firewall Insulation Set - V8	$189.99
40026	56	Firewall Insulation Set w/ Fasteners 56E Standard Trans & Heater	$189.99
40028	56-57	Firewall Insulation Set w/ Fasteners Standard Transmission, no Heater - 56 Late	$222.99
40027	56-57	Firewall Insulation Set w/ Fasteners Auto Trans & Heater - 56 Late	$189.99
40016	58-59	Firewall Insulation Set w/ Fasteners & FI 59E Standard Trans, no Heater	$222.99
40015	58-59	Firewall Insulation Set w/ Fasteners & FI 59E Auto Trans & Heater	$189.99
40029	58-59	Firewall Insulation Set w/ Fasteners 59E Auto Trans & Heater	$189.99
40031	58-59	Firewall Insulation Set. W/Fasteners Standard Transmission, No Heater	$222.99
40033	58-59	Firewall Insulation Set. W/Fasteners Automatic Transmission, No Heater	$222.99
40038	59-60	Firewall Insulation Set w/ Fasteners	$222.99
40044	59-61	Firewall Insulation Set w/ Fasteners & FI Auto Trans, no Heater	$222.99
40037	59-61	Firewall Insulation Set w/ Fasteners Standard Transmission, no Heater	$222.99
40036	59-61	Firewall Insulation Set w/ Fasteners & FI Auto Trans & Heater	$189.99
40032	59-61	Firewall Insulation Set w/ Fasteners & FI Standard Transmission & Heater	$189.99
40030	59-61	Firewall Insulation Set w/ Fasteners w/o FI L59-61 Auto Trans & Heater	$189.99
40022	59-61	Firewall Insulation Set w/ Fasteners & FI Standard Transmission, no Heater	$222.99
40045	61	Firewall Insulation Set w/ Fasteners & FI Standard Transmission & Heater	$189.99
40017	61	Firewall Insulation Set w/ Fasteners w/o FI Standard Transmission & Heater	$189.99
40024	62	Firewall Insulation Set w/ Fasteners & FI Standard Transmission, no Heater	$222.99
40023	62	Firewall Insulation Set w/ Fasteners & FI Standard Transmission & Heater	$189.99
40047	62	Firewall Insulation Set w/ Fasteners Auto Trans & Heater	$189.99
40046	62	Firewall Insulation Set w/ Fasteners Standard Transmission, no Heater	$222.99
40021	58-61	Firewall Insulation Set 3 pc	$49.99

1956-1962 FIREWALL INSULATION

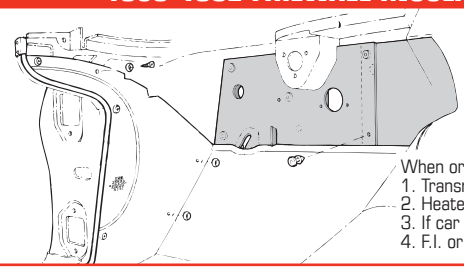

When ordering, specify:
1. Transmission type
2. Heater or No Heater
3. If car has windshield washers
4. F.I. or Carb.

WARNING: Cancer and Reproductive Harm — www.P65Warnings.ca.gov

#0567

#25307

#0809

#25565

CLOCK

25307	58-62	Clock	$142.99
25306	58-62	Clock Bezel	$30.99
0829	53-55	Clock Chrome Bezel	$60.99
25565	56-57	Clock Chrome Bezel	$60.99
0567	53-57	Clock Face w/ Numbers	$29.99
25300	58-62	Clock Face w/ Numbers	$24.99
25308	58-62	Clock Knob	$12.99
27337	58-62	Clock Lock Washer/Grounding Ring	$8.99

LENSES

32748	58-62	Brake / Beam & Turn Signal Lens 3 Piece Set	$30.99
0658	53-57	Clock Lens	$15.99
25567	53-58	Gauge Lens, Small - 4 pc set	$18.99
25568	59-62	Gauge Lens, Small - 4 pc set	$20.99
25571	53-54	Instrument Lens Set - includes Speedo Face (2 pc), Tachometer Face & Lens, Gauge Lens Set (4 pc) and Clock Face & Lens	$167.99
25572	55-57	Instrument Lens Set - includes Speedo Face (2 pc), Tachometer Face & Lens, Gauge Lens Set (4 pc) and Clock Face & Lens	$167.99
25573	58	Instrument Lens Set - includes Speedo Face, Tachometer Face (Lo RPM) & Lens, Gauge Lens Set (4 pc) and Clock Face	$152.99
25574	59-62	Instrument Lens Set - includes Speedo Face, Tachometer Lens, Gauge Lens Set (4 pc) and Clock Face	$104.99
0744	53-57	Speedometer Face w/ Numbers - 2 pc set	$50.99
0850	58-62	Speedometer Lens w/ Numbers	$43.99
0745	53-62	Tachometer Lens	$14.99
32745	53-62	Tachometer Lens Seal	$5.99

Product photos, descriptions and diagrams at:

www.CorvetteAmerica.com

#0810

#46632

#50550

#50558

#50556

#50551

#25580

#25566

SMALL GAUGES

25564	53-58	Amp Gauge Face	$41.99
50551	60	Amp Gauge	$91.99
50555	61-62	Amp Gauge	$91.99
25566	53-58	Fuel Gauge Face	$41.99
50550	60	Fuel Gauge	$91.99
50554	61-62	Fuel Gauge	$91.99
0920	53-55	Inner Tachometer Face w/ Dots	$36.99
37633	53-62	Instrument Panel Bulb Socket	$4.99
25578	53-58	Oil Gauge Face	$41.99
50552	60	Oil Pressure Gauge	$91.99
50556	61-62	Oil Pressure Gauge	$91.99
50553	60	Temperature Gauge	$91.99
25580	53-58	Temperature Gauge Face	$41.99
33640	56	Temperature Sending Unit	$26.99
33643	57-62	Temperature Sending Unit	$26.99
50557	61-62	Temperature Gauge 220	$91.99
50558	61-62	Temperature Gauge 240	$91.99
0810	53-62	Twin Gauge Chrome Bezel	$40.99

800-458-3475
CorvetteAmerica.com

WARNING: Cancer and Reproductive Harm — www.P65Warnings.ca.gov

Speedometer

46307	53-62	Clip - Speedo Cable to Inner Fender - 1 1/4"- 6 pc	$18.99
35559	53-62	Clip - Speedo Cable to Inner Fender - 1 5/8"- 6 pc	$19.99
27328	53-62	Firewall Grommet - 7/8" - for Speedo Cable - 9 pc	$20.99
35562	53-62	Mounting Cushions - Speedo/Tach - pr	$2.99
44632	53-62	Odometer	$67.99
1604	53-62	Odometer Gear - Plastic	$12.99
35548	53-62	Speedometer Cable - 53-55 All, 56-59 Auto, 56-62 Muncie - w/ Steel Case	$37.99
35549	56-59	Speedometer Cable - 3-Speed- w/ Steel Case - 60"	$37.99
35550	56-59	Speedometer Cable - 4-Speed- w/ Steel Case - 62"	$37.99
35551	60-62	Speedometer Cable - 60-62 Speedo Exc. Muncie, 60-61 Tach - Gray Case - 61"	$42.99
37242	58-62	Speedometer Cable - 4-Speed	$35.99
41226	53-62	Speedometer Cable Repair Kit - Inner	$8.99
0828	53-57	Speedometer Chrome Bezel	$91.99
0809	58-62	Speedometer Chrome Bezel	$91.99
35372	58-62	Speedometer to Dash Cluster Screws - 3 pc set	$3.99
44643	59-62	Speedometer Needle	$23.99
32828	61-62	Speedometer Drive Gear - 18 Tooth Brown	$7.99
32829	61-62	Speedometer Drive Gear - 20 Tooth Blue	$10.99
32830	61-62	Speedometer Drive Gear - 21 Tooth Red	$8.99
32831	61-62	Speedometer Drive Gear - 22 Tooth Gray	$8.99
32832	61-62	Speedometer Drive Gear - 24 Tooth Yellow	$9.99

Tachometer Drive

35552	53-55	Tachometer Cable - 6 cyl - w/ Steel Case	$44.99
35553	55-57	Tachometer Cable - 55 8 cyl - w/ Steel Case	$36.99
35554	58-59	Tachometer Cable - w/ Steel Case	$37.99
35555	58-61	Tachometer Cable - w/ Firewall Seal - F.I. w/ Steel Case	$87.99
35563	58-61	Tachometer Cable Gen. Driven 70" w/o FI	$24.99
35551	60-62	Tachometer Cable - Gray Case - 61"	$42.99
41427	62	Tachometer Cable - Gray Case - 33" - w/ Boot	$54.99
41226	53-62	Cable Repair Kit - Inner	$8.99
35560	62	Tachometer Cable Boot & Retainer	$24.99
35561	62	Tachometer Cable Boot Retainer	$7.99
27328	58-62	Tachometer Cable Firewall Grommets - 9 pc set	$20.99
27682	56-61	Tachometer Drive Assembly Less Gears	$122.99
35567	56-61	Tachometer Drive Unit Housing Gasket	$5.99
27685	56-61	Tachometer Drive Unit Nylon Gear - improved replacement for Fiber Gear	$19.99
27684	56-61	Tachometer Drive Unit Repair Kit (shaft & gasket)	$32.99
K1397	56-61	Tachometer Drive Unit to Generator Bolts - pr	$2.99

Cable Adapters

The Cable Adapter eliminates the 90° bend in your speedometer or tachometer cable and all the wear it causes. Small grease fitting for easy maintenance.

X2521 Speedo / Tach Cable Adapter $40.99

New products always added!

Corvette America.com

NEW

#22302

#46294

Tachometer

22300	53-55	Tachometer - 5000 RPM Dist. Drive - 6 cyl.	$478.99
22301	55-57	Tachometer - Generator Drive	$478.99
22302	58	Tachometer - 6000 RPM Generator Drive	$478.99
22303	58	Tachometer - 8000 RPM Generator Drive	$478.99
22304	58	Tachometer - 8000 RPM Distributor Drive	$478.99
46272	59	Tachometer - 5300 RPM Generator Drive	$427.99
46273	59	Tachometer - 6500 RPM Generator Drive	$427.99
46274	59	Tachometer - 6500 RPM Distributor Drive	$427.99
46275	60	Tachometer - 5300 RPM Generator Drive	$427.99
46276	60	Tachometer - 6500 RPM Generator Drive	$427.99
46277	60	Tachometer - 6500 RPM Distributor Drive	$427.99
46278	60-61	Tachometer - 5300 RPM Generator Drive	$427.99
46279	60-61	Tachometer - 6500 RPM Generator Drive	$427.99
46280	60-61	Tachometer - 6500 RPM Distributor Drive	$427.99
46281	61	Tachometer - 5300 RPM Generator Drive	$427.99
46282	61	Tachometer - 6500 RPM Generator Drive	$427.99
46283	61-62	Tachometer - 6500 RPM Distributor Drive	$427.99
46284	62	Tachometer - 5300 RPM Distributor Drive	$427.99
40503	59	Tachometer - Electronic Low RPM	$407.99
40504	59	Tachometer - Electronic Hi RPM	$407.99
40505	60	Tachometer - Electronic Low RPM	$407.99
40506	60	Tachometer - Electronic Hi RPM	$407.99
40507	60-61	Tachometer - Electronic Low RPM	$407.99
40508	60-61	Tachometer - Electronic Hi RPM	$407.99
40509	61-62	Tachometer - Electronic Low RPM	$407.99
40510	61-62	Tachometer - Electronic Hi RPM	$407.99
46288	53-62	Tachometer Bezel Retainer	$40.99
0827	53-62	Tachometer Chrome Bezel	$50.99
47353	53-58	Tachometer Inner Bezel	$60.99
46287	59-62	Tachometer Inner Bezel	$70.99
47354	53-58	Tachometer Face Backplate	$66.99
47355	58	Tachometer Face Backplate - 8000 RPM	$67.99
0919	53-54	Tachometer Face w/ Numbers	$37.99
0918	55-57	Tachometer Face w/ Numbers - 6000 RPM	$37.99
0916	55-58	Tachometer Face (Inner) w/ Dots - 6000 RPM	$30.99
25579	58	Tachometer Face (Inner) w/ Dots - 8000 RPM	$39.99
0917	58	Tachometer Face w/ Numbers - 6000 RPM	$50.99
0951	58	Tachometer Face w/ Numbers - 8000 RPM	$50.99
46289	59	Tachometer Face - 5300 RPM	$60.99
46290	59	Tachometer Face - 6500 RPM	$60.99
46291	60	Tachometer Face - 5300 RPM	$60.99
46292	60	Tachometer Face - 6500 RPM	$60.99
46293	60-61	Tachometer Face - 5300 RPM	$60.99
46294	60-61	Tachometer Face - 6500 RPM	$60.99
46295	61-62	Tachometer Face - 5300 RPM	$60.99
46296	61-62	Tachometer Face - 6500 RPM	$60.99
46298	53-57	Tachometer Housing	$111.99
46286	58-62	Tachometer Housing	$101.99
35562	53-62	Tachometer / Speedo Mounting Cushions - pr	$2.99
35568	53-62	Tachometer / Speedo Mounting Screw - 2 req'd	$3.99
47352	53-58	Tachometer Pointer	$19.99
46285	59-62	Tachometer Pointer	$19.99
46297	53-58	Tachometer Rev. Counter	$45.99

WARNING: Cancer and Reproductive Harm — www.P65Warnings.ca.gov

DECALS

0294	58-61	Air Cleaner, FI Instructions	$4.99
0295	62	Air Cleaner, FI Instructions	$7.99
0183	56-61	Battery Warranty Card	$4.99
35392	53	Blue Flame Six Valve Cover Decal	$5.99
0510	53-57	Clock Instruction	$4.99
35385	58-62	Clock Instructions Card	$2.99
35388	54-55	Convertible Top Instruction Decal	$6.99
0652	56-60	Engine Break-in Card	$4.99
35386	58-62	Fuel Gauge Warning Decal on Back of Gauge	$3.99
0343	62	Gas Filter Decal	$4.99
0344	53-62	Generator Tag	$4.99
0345	58-61	Glove Box Paint Notice Decal	$4.99
0352	61-62	Harrison Radiator Decal	$4.99
35390	60-62	Harrison Radiator Metal Plate - Blank - 62E	$21.99
35391	62	Harrison Radiator Metal Plate - Blank - 62L	$11.99
41118	60-62	Harrison Radiator Metal Plate Screws - pr	$2.99
35381	56-62	Heater Core Housing Inspection Approval #124 Decal	$2.99
35389	58-62	Heavy Duty Brakes Instruction Decal - On Spare Tire Board	$39.99
0355	53-60	Jacking Instructions	$4.99
0356	61-62	Jacking Instructions	$4.99
0369	55-58	Oil Filler Cap	$4.99
0363	59-62	Oil Filler Cap	$4.99
0364	56-57	Oil Filter	$4.99
0365	58-62	Oil Filter	$4.99
35383	62	PCV Tag - "CV-590"	$3.99
35387	61-62	PCV Tag - Hangs from Mirror	$31.99
0366	57-58	Positraction Warning	$4.99
0367	59-62	Positraction Warning	$4.99
0370	55-62	Radiator Caution - 55-57 Radiator, 61-62 Expansion Tank	$4.99
0371	58-62	Radiator Caution - 58-60 RH Radiator, 61-62 LH Radiator & Top of Expansion Tank	$4.99
41115	53-60	Radiator ID Plate - Brass Dated	$53.99
0792	53-57	Radio Instruction Sheet	$4.99
0375	58-62	Radio Instructions - Wonderbar	$4.99
0394	62	Valve Cover - Chevrolet 327 Turbo Fire - Foil Replacement - pr	$4.99
35395	62	Valve Cover - Chevrolet 327 Turbo Fire - Correct Metal - pr	$10.99
35394	57	Valve Cover - 220 hp - pr	$4.99
0784	58-61	Valve Cover - 230 hp - pr	$4.99
0381	57-59	Valve Cover - 250 hp - pr	$4.99
0380	57-61	Valve Cover - 245 hp - pr	$4.99
0387	62	Valve Cover - 250 hp - pr	$4.99
0382	57-61	Valve Cover - 270 hp - pr	$4.99
0383	59-61	Valve Cover - 275 hp - pr	$4.99
0384	57	Valve Cover - 283 hp - pr	$4.99
0385	58-59	Valve Cover - 290 hp - pr	$4.99
0388	62	Valve Cover - 300 hp - pr	$4.99
0386	60-61	Valve Cover - 315 hp - pr	$5.99
0389	62	Valve Cover - 340 hp - pr	$4.99
0390	62	Valve Cover - 360 hp - pr	$4.99
35384	62	Warranty Decal - 12 mo./12,000 mile	$23.99
35382	58-62	Washer Bottle Dry Cycle Adjust Decal	$3.99

#0355

#0383

#0386

#0356

#0390

#35384

#0389

#35417

DECAL SETS

Sets include generator tag, paint notice, jacking instructions, oil filter canister, oil filler cap, cooling system and valve cover decals as applicable. Order additional decals separately.

35396	56	Decal Set - All Cars - 5 pc	$18.99
35397	57	Decal Set - 220 hp - 8 pc	$18.99
35398	57	Decal Set - 245 hp - 8 pc	$18.99
35399	57	Decal Set - 250 hp - 8 pc	$18.99
35400	57	Decal Set - 270 hp - 8 pc	$18.99
35401	57	Decal Set - 283 hp - 8 pc	$18.99
35402	58-60	Decal Set - 230 hp - 8 pc	$18.99
35403	58-60	Decal Set - 245 hp - 8 pc	$18.99
35404	58-60	Decal Set - 250 hp - 8 pc	$18.99
35405	58-60	Decal Set - 270 hp - 8 pc	$18.99
35406	59-60	Decal Set - 275 hp - 8 pc	$18.99
35407	58-60	Decal Set - 290 hp - 8 pc	$18.99
35408	60	Decal Set - 315 hp - 8 pc	$18.99
35409	61	Decal Set - 230 hp - 8 pc	$18.99
35410	61	Decal Set - 245 hp - 8 pc	$18.99
35411	61	Decal Set - 270 hp - 8 pc	$18.99
35412	61	Decal Set - 275 hp - 8 pc	$18.99
35413	61	Decal Set - 315 hp - 8 pc	$18.99
35414	62	Decal Set - 250 hp - 9 pc	$18.99
35415	62	Decal Set - 300 hp - 9 pc	$18.99
35416	62	Decal Set - 340 hp - 9 pc	$18.99
35417	62	Decal Set - 360 hp - 9 pc	$18.99

FAST Shipping!

Fast Service & Delivery!

Most orders are processed & shipped the same day!

800-458-3475
CorvetteAmerica.com

WARNING: Cancer and Reproductive Harm — www.P65Warnings.ca.gov

#27486

#27485

DOOR COMPONENTS

41157	53-55	Ashtray	$42.99
41158	53-55	Ashtray Bezel	$13.99
27489	56-58	Door End Cap w/o Hole - 58E	$91.99
23146	58-59	Door End Cap w/ Hole	$89.99
27490	59-60	Door End Caps - w/ Ridge 59L - pr	$88.99
27491	59-60	Door End Cap w/ Ridge - LH - 59L	$45.99
27492	59-60	Door End Cap w/ Ridge - RH - 59L	$45.99
27493	61-62	Door End Caps w/ Screws & Nuts - pr	$96.99
27483	56-58	Door End Cap Mount Retainer - LH - 58E	$12.99
27484	56-58	Door End Cap Mount Retainer - RH - 58E	$12.99
27485	56-58	Door End Cap Mount & WS Retain - 58E - 6 pc	$24.99
27488	58-60	Door End Cap Mount & WS Retainer - 58L	$12.99
27494	61-62	Door End Cap Mount Kit	$7.99
42808	53-55	Door Panel Grommets - 20 pc	$19.99
23130	56-62	Door Posts - LH	$636.99
23131	56-62	Door Posts - RH	$636.99
K1226	56-62	Door Rod Retainers - pr	$1.99
41148	56-62	Door Rod Retainers - Wire - pr	$4.99
27472	56-57	Door Drip Rails - Metal - 57 E - pr	$124.99
27473	57-62	Door Drip Rails - Metal - 57 L - pr	$47.99
K1292	56-57	Door Drip Rail Screws - 6 pc	$2.99
K1296	57-59	Door Drip Rail Screws - 8 pc	$3.99
35432	60-62	Door Drip Rail Screws - 8 pc	$9.99
K1345	56-62	Door Screws - Multi-purpose - 6 pc	$4.99

WIN CORVETTE PRIZES!

Follow us for your chance to win.

1956-62 DOOR HINGES

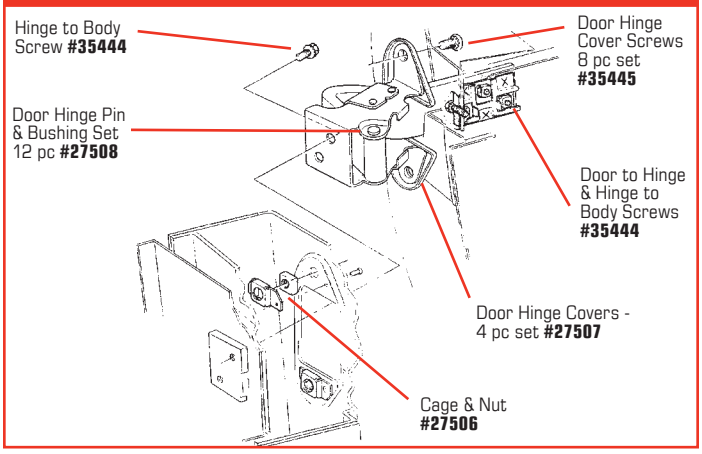

DOOR HINGES

27506	56-62	Door Hinge Cage & Nut Assembly	$5.99
35445	56-62	Door Hinge Cover Screws - 8 pc	$9.99
27507	56-62	Door Hinge Cover Set - 4 pc	$39.99
27508	56-62	Door Hinge Pin & Bushing Set - 4 pin/8 bushings	$21.99
41152	56-62	Door Hinge Tension Springs - 4 pc	$24.99
35444	56-62	Door-to-Hinge & Hinge-to-Body Bolts 10 pc - does one door	$16.99
41153	56-57	Door Hinge to Body Anchor Nut Retainer - LH	$23.99
41154	56-57	Door Hinge to Body Anchor Nut Retainer - RH	$23.99

DOOR MOLDINGS

27480	56-58	Inner Door Garnish Molding - pr	$104.99
27481	59-62	Inner Door Garnish Molding - pr	$104.99
K1212	56-62	Inner Door Garnish Molding Screw Set	$4.99
27474	56-58	Outer Door Reveal Molding - LH	$70.99
27475	56-58	Outer Door Reveal Molding - RH	$70.99
46838	56-58	Outer Door Reveal Moldings - pr	$138.99
27476	59-62	Outer Door Reveal Molding - LH	$68.99
27477	59-62	Outer Door Reveal Molding - RH	$68.99
27479	59-62	Outer Door Reveal Molding - pr	$138.99
27478	56-58	Outer Door Reveal Molding Retainers - pr	$52.99
K1222	59-62	Outer Door Reveal Molding Mount Kit	$5.99

1956-1962 DOOR

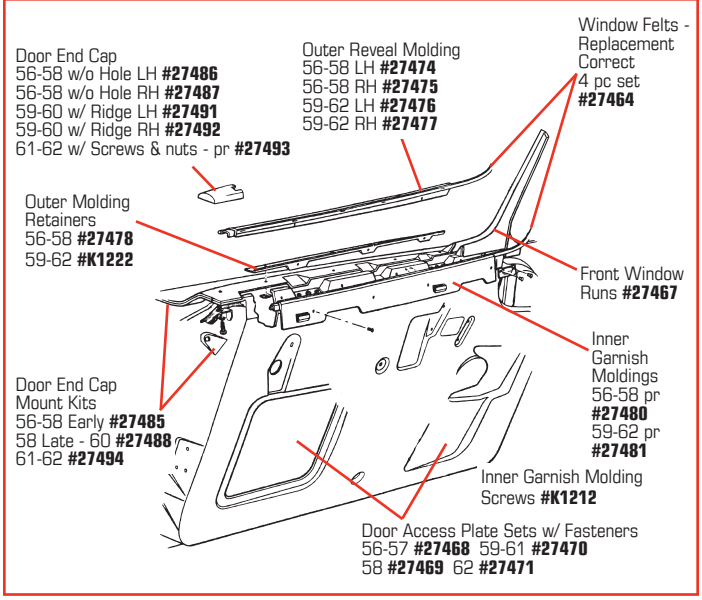

1956-1962 DOOR HARDWARE

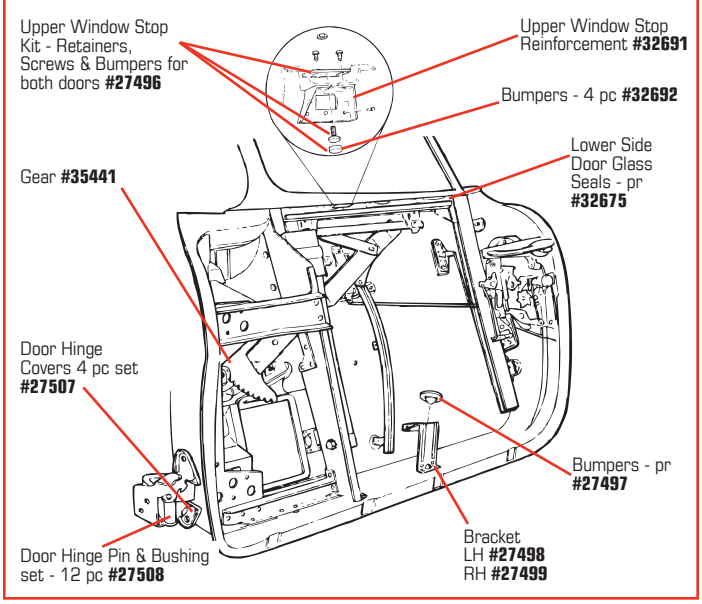

WARNING: Cancer and Reproductive Harm — www.P65Warnings.ca.gov

#28759

#23811

#27512

#20397

1956-1962 DOOR OPEN & LOCK CONTROLS

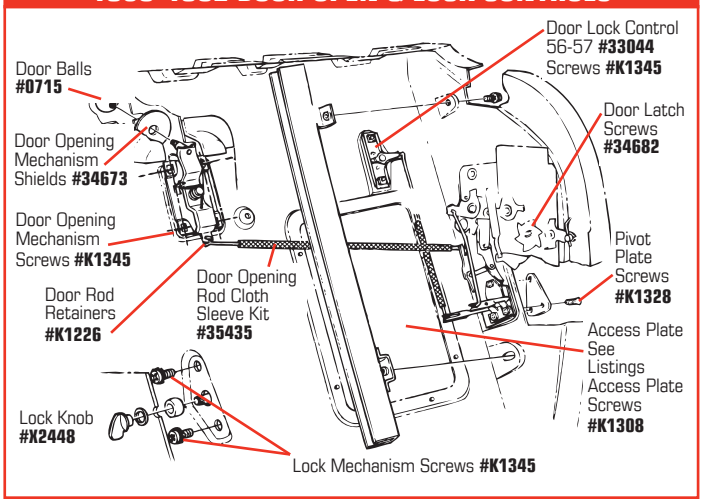

Door Locks & Opening Components

23810	56-58	Door Locks - pr	$40.99
23811	59-62	Door Locks - pr	$39.99
28759	56-62	Door Lock Bezel	$9.99
27504	56-62	Door Lock Cylinder Rod w/ Clip	$11.99
0713	56-62	Door Lock Gasket	$2.99
28758	56-62	Door Lock Retainer	$10.99
0715	53-62	Door Balls - White - pr	$9.99
34682	56-62	Door Latch Screws - 8 pc set	$6.99
27532	56-59	Door Latch Lock Mechanism	$197.99
27512	60-62	Door Latch Lock Mechanism	$174.99
33044	56-57	Door Lock Control	$32.99
46612	59-61	Door Lock Control	$32.99
46613	62	Door Lock Control	$32.99
X2448	56-62	Door Lock Knob - Inside	$13.99
41147	56-62	Door Lock Mechanism to Bellcrank Rod	$12.99
K1328	56-62	Door Lock Pivot Plate Screws - 6 pc set	$2.99
41146	56-62	Door Lock Pivot Retainer Plate - w/ Screws	$23.99
41144	56-58	Door Lock Rod - Stainless	$13.99
41145	59-62	Door Lock Rod - Stainless	$13.99
41156	53-55	Door Open Bezels - pr	$93.99
41149	53-62	Door Opening Mechanism - Inside	$75.99
34673	60-62	Door Opening Mechanism Shields - pr	$5.99
41140	56-62	Door Opening Mechanism Springs - pr	$5.99
41141	56-57	Door Opening Pull Rod - Stainless	$14.99
41142	58	Door Opening Pull Rod - Stainless	$13.99
41143	59-62	Door Opening Pull Rod - Stainless	$14.99
35435	56-62	Door Opening Rod Cloth Sleeve Kit	$9.99

Door Handle & Components

20397	56-62	Door Handle Assemblies* - Trim Parts - pr	$91.99
44887	56-62	Door Handle Assemblies*- Import - pr	$71.99
		*Door Handle Assemblies include handles, gaskets, screws, buttons,rods, guides, springs & retainers.	
0712	56-62	Door Handle Gasket Set - 4 pc	$3.99
32690	56-62	Door Handle Lever Rod Spring Kit	$5.99
0568	56-62	Door Handle Push Buttons - set	$38.99
42932	56-62	Door Handle Push Button Levers - pr	$26.99
35428	56-62	Door Handle Push Button O-Rings - pr	$1.99
35429	56-62	Door Handle Push Button Retainers - pr	$5.99
32688	56-62	Door Handle Push Button Rod & Pivot - LH	$14.99
32689	56-62	Door Handle Push Button Rod & Pivot - RH	$14.99
35427	56-62	Door Handle Push Button Springs - pr	$6.99
27495	56-62	Door Handle Reinforcement Plates - pr	$19.99
K1318	56-62	Door Handle Screw Set - 4 pc	$3.99

Door Access Plate

32676	56-57	Door Access Plate - Large	$33.99
32677	58	Door Access Plate - Large - LH	$46.99
32678	58	Door Access Plate - Large - RH	$46.99
32679	59-61	Door Access Plate - Large - LH	$46.99
32680	59-61	Door Access Plate - Large - RH	$46.99
32681	62	Door Access Plate - Large - LH	$46.99
32682	62	Door Access Plate - Large - RH	$46.99
32683	56-62	Door Access Plate - Small	$15.99
32684	56-62	Door Access Plate Caulk Strip	$7.99
K1308	56-62	Door Access Plate Screws - 10 pc set	$3.99
27468	56-57	Door Access Plate Set w/ Fasteners - 4 pc	$98.99
27469	58	Door Access Plate Set w/ Fasteners - 4 pc	$124.99
27470	59-61	Door Access Plate Set w/ Fasteners - 4 pc	$124.99
27471	62	Door Access Plate Set w/ Fasteners - 4 pc	$124.99

1956-1962 DOOR HANDLE & LOCK

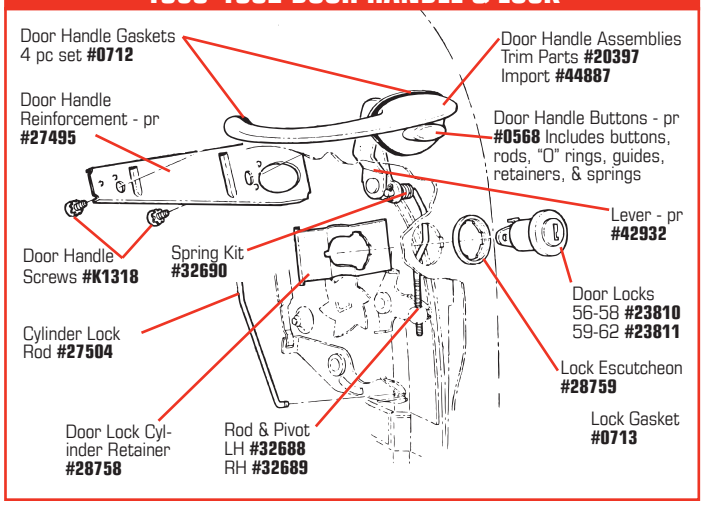

800-458-3475
CorvetteAmerica.com
WARNING: Cancer and Reproductive Harm — www.P65Warnings.ca.gov

#27461

Window Felts

27464	56-62	Window Felts - Inner & Outer - Correct - 4 pc set	$97.99
27462	56-58	Window Felt & Door Garnish Molding Set	$492.99
27463	59-62	Window Felt & Door Garnish Molding Set	$492.99
0654	53-62	Window Felt Staple Set - SS - 25 pc	$3.99
0662	56-62	Window Run Liner - Front - Replacement	$30.99
0898	56-62	Window Run Liner - Rear	$7.99
27461	56-62	Window Run & Felt Set - Correct	$209.99
49150	56-62	Window Run Rear - Left	$53.99
49151	56-62	Window Run Rear - Right	$53.99

#27496

#27499

Door Glass & Window Components

28843	56-62	Door Glass - Assembled Clear LH	$254.99
28844	56-62	Door Glass - Assembled Clear RH	$254.99
28845	56-62	Door Glass - Assembled Tinted LH	$254.99
28846	56-62	Door Glass - Assembled Tinted RH	$254.99
28847	56-62	Door Glass - Clear LH	$91.99
28848	56-62	Door Glass - Clear RH	$91.99
28849	56-62	Door Glass - Tinted LH	$91.99
28850	56-62	Door Glass - Tinted RH	$91.99
35437	56-62	Door Window Glass to Frame Tape	$21.99
K1300	56-62	Door Window Frame & Upper Track Screws	$5.99
27467	56-62	Front Window Run w/ White Stitching - pr	$89.99
35433	56-62	Front Window Run Mount Kit	$6.99
28859	57-62	Front Window Channel Guide - LH	$108.99
28860	57-62	Front Window Channel Guide - RH	$108.99
32675	56-62	Lower Door Glass Seals - pr	$31.99
27498	56-62	Lower Door Glass Stop Bracket w/ Rivet - LH	$24.99
27499	56-62	Lower Door Glass Stop Bracket w/ Rivet - RH	$24.99
27497	56-62	Lower Door Glass Stop Bumpers - pr	$13.99
32692	56-62	Upper Window Stop Bumpers - 4 pc	$9.99
32691	56-62	Upper Window Stop Reinforcement	$17.99
27466	56-58	Upper Window Stop w/ Rivets on Door Post - pr	$34.99
27496	56-62	Upper Window Stop Kit - Upper Bumpers, Screws & Retainer Plates for both doors	$42.99
35441	56-62	Window Regulator Gear	$26.99
28861	56-62	Window Regulator Guide Track - Left	$45.99
28862	56-62	Window Regulator Guide Track - Right	$45.99
35442	56-62	Window Regulator Set - Except PW	$203.99
46831	58-62	Window Sticker	$4.99

#29802

#41150

#41151

Power Window Motor & Switch

29802	56-62	Power Window Motor LH - Flat Style	$89.99
29803	56-62	Power Window Motor RH - Flat Style	$89.99
29177	56-62	Power Window Motor Retrofit Harness	$15.99
K1436	56-62	Power Window Motor Screws - 6 pc set	$4.99
41150	56-62	Power Window Switch - LH	$137.99
41151	56-62	Power Window Switch - RH	$80.99
43514	56-62	Power Window Switch Adapter	$19.99
32693	56-62	Power Window Conduits - pr	$69.99

#32697

#44891

1956-1962 DOOR STRIKER

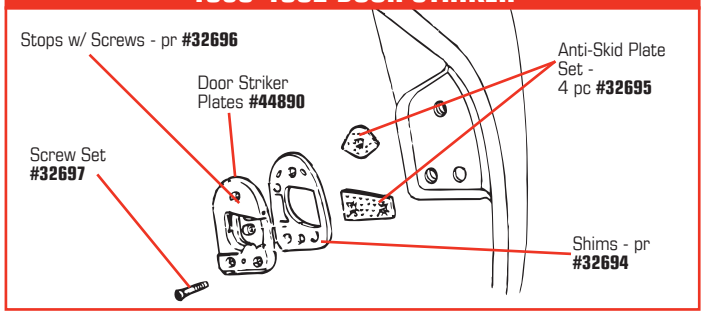

Door Striker

32695	56-62	Door Striker Anti-Skid Plates - 4 pc	$26.99
41133	56-62	Door Striker Nut Plate	$20.99
41155	53-55	Door Striker Plates - pr	$443.99
44890	56-59	Door Striker Plates - pr	$88.99
44891	60-62	Door Striker Plates - pr	$88.99
32697	56-62	Door Striker Screw Set - 6 pc	$6.99
32694	56-62	Door Striker Shims - pr	$20.99
32696	56-62	Door Striker Stops with Screws - pr	$6.99

WARNING: Cancer and Reproductive Harm — www.P65Warnings.ca.gov

#0722

#26610

#26600

#26685

#26609

#26604

#42839

#41681

#0092

#26608

#0620

#26601

#35446

EMBLEMS

0722	58-62	Emblem - Gold Reproduction - 58-60 Nose & 58-62 Rear	$75.99
26611	62	Emblem Backplate - Black Finish	$34.99
0094	58-62	Emblem Gasket - 58-60 Nose & 58-62 Rear	$1.99
0093	58-61	Emblem Backplate - Silver Finish	$32.99
0092	58-62	Emblem Bezel	$45.99
26610	58-61	Emblem Assembly w/ Gold Emblem, Gasket, Bezel & Silver Backplate	$129.99
27509	56-57	Emblem Bezel to Body Gasket - Nose & Rear - ea	$3.99
26607	56-57	Emblem Bezel - Nose & Rear - ea	$43.99
26601	56-57	Emblem - Nose & Rear - ea	$55.99
41681	57	Front Fender Crossflags FI - pr	$99.99
26605	58-60	Front Fender Crossflags - pr	$82.99
26606	62	Front Fender Crossflags - Trim Parts - pr	$64.99
42839	62	Front Fender Crossflags - Import - pr	$50.99
0620	61	Front Fender Side Bars - 4 pc set	$80.99
26608	61	Front Fender Emblems - "Corvette" - pr	$63.99
26609	61	Front Fender Emblem Set, 6 pc - 2 "Corvette" Emblems & 4 Side Bars	$132.99
26604	62	Front Fender Emblems - Fuel Injection - pr	$82.99
49972	58-61	Fuel Injection Script Emblem - Fender	$95.99
35448	57	Fuel Injection Emblem - Side or Rear - pr	$70.99
35453	57	Fuel Injection Emblem - Side or Rear - ea	$40.99
0720	61	Nose Emblem	$62.99
43509	62	Nose Emblem	$81.99
26600	53-55	Nose Emblem Assembly	$126.99
26603	61-62	Nose Letter Set	$60.99
26685	62	Rear Emblem Assembly w/ Gold Emblem, Bezel, Gasket & Black Backplate	$136.99
35446	53-55	Side Scripts - Chevrolet - pr	$220.99
35447	55	Side Script Gold V's - pr	$227.99
26989	58-62	Emblem & Bezel Speednut Set - Correct - 25 pc	$34.99

EMBLEM SPEEDNUTS

K1024	58	Emblem Speednut Kit - 60 pc	$9.99
K1025	59-60	Emblem Speednut Kit - 64 pc	$10.99
K1026	61	Emblem Speednut Kit - 97 pc	$14.99
K1027	62	Emblem Speednut Kit - 65 pc	$10.99
26990	58-62	Winged Speednut Fastening Tool	$33.99

800-458-3475
CorvetteAmerica.com

WARNING: Cancer and Reproductive Harm — www.P65Warnings.ca.gov

#27687

#27834

GENERATOR

27687	53-62	Delco Tags - Unstamped - 3 pc set	$16.99
27688	53-62	Delco Tag Rivets - 2 pc	$2.99
41230	53-54	Generator Adjusting Brace	$43.99
27770	55-57	Generator Adjusting Brace	$50.99
27771	58-62	Generator Adjusting Brace	$23.99
27383	58-62	Generator Brace/Water Pump Mount Stud	$13.99
27689	56-57	Generator Heat Shield	$19.99
27690	58-60	Generator Heat Shield	$19.99
27693	56-57	Generator Mount Bracket	$34.99
27694	58-61	Generator Mount Bracket, Exc FI	$34.99
27695	58-62	Generator Mount Bracket, FI & All 62 HP	$34.99
27697	58-62	Generator Mount Plate - 58L - 61 all & 62 FI	$12.99
27698	62	Generator Mount Plate - all w/o FI	$13.99
27836	56-62	Generator Mount Rubber Bushing	$8.99
27691	58-61	Generator Pivot Mount Bolt Kit - Exc FI - 56-57 All - 58-61 w/o FI	$4.99
27692	58-61	Generator Pivot Mount Bolt Kit - 58-61	$4.99
27832	56-57	Generator Pulley, 3 5/8", 2x4 or FI.	$154.99
27833	58-62	Generator Pulley 3 5/8" Exc FI or Hi-Lift Cam	$122.99
27834	58-62	Generator Pulley 4" FI & Hi-Lift Cam	$128.99
27835	53-62	Generator Pulley Nut w/ Washer	$5.99
35566	53-61	Generator Restoration Kit - 2 Terminal Posts, 2 Brushes, 1 Oiler Assembly, 2 Bearings, 2 Bushings & 2 Oil Caps	$69.99
27772	56-62	Generator Top Adjust Bolt w/ Washer	$2.99
K1458	58-61	Generator U-Bracket to Plate Bolt Kit	$9.99
41228	55-62	Regulator - Generator Harness Mount Kit	$4.99

Product photos, descriptions and diagrams at:

www.CorvetteAmerica.com

1953-1962 GENERATOR

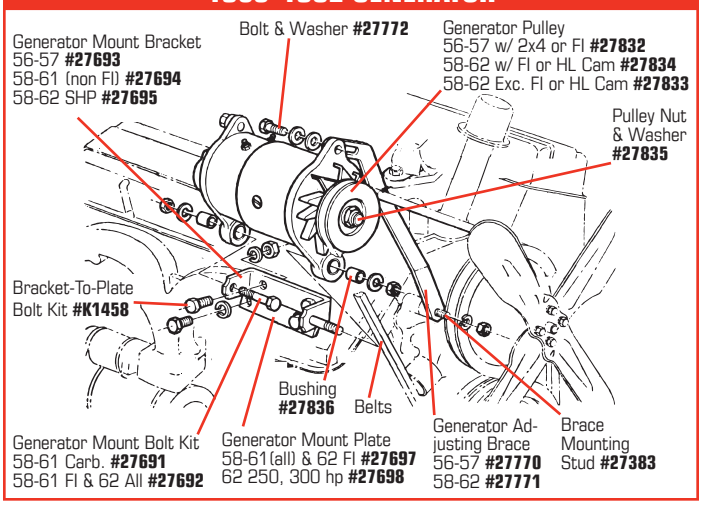

GENERATOR BELTS

22662	55-57	All - Exc 2x4 & FI	$15.99
22661	56-57	All - w/ 2x4 & FI	$27.99
22663	58-60	All - FI	$47.99
22660	58-62	All - Exc Hi-Lift Cam	$35.99
51560	58	All - Before 5/58 - Reproduction	$38.99
51561	58	All - FI - Before 4/58 - Reproduction	$38.99
51562	58-59	All - After 5/58 - Reproduction	$38.99
51563	58-59	All - FI - After 4/58 - Reproduction	$38.99
51564	61	w/ Hi-Lift Cam Reproduction - GM# 3779858	$38.99

REPRODUCTION BELTS — 1956-62 Original GM Belts were Wrapped design and included GM Emblem, GM Part Number, Broadcast Code (where applicable), Belt Size (where applicable), Manufacturer's Symbol & Construction Codes.

FENDER GRIPPERS

Protect your paint when you're under the hood. You'll be able to work in style knowing that your exterior is protected from those annoying scratches that might otherwise ruin your work of art. Made from a non-slip material. You can rest assured that your tools will not slip off the fender gripper. Remember, Fender Gripper is completely washable and impervious to motor oil, so clean up is a snap!

46491	C1 Logo Fender Gripper	$27.99
46493	C2 Logo Fender Gripper	$30.99

In Stock & ready for shipping!

In addition to our regular delivery, we offer more options for getting your packages when you need them. Call our Sales Reps for details.

WARNING: Cancer and Reproductive Harm — www.P65Warnings.ca.gov

Delco Remy GENUINE PRODUCTS

DISTRIBUTOR

49476	59-62	Distributor Cap - Delco-Remy Reproduction	$75.99
41127	53-54	Distributor Cap	$21.99
27447	55-61	Distributor Cap - 55-57 all, 58-61 2x4 & HP	$21.99
27448	58-62	Distributor Cap - Exc 2x4 & HP - Replacement	$14.99
35421	58-62	Distributor Cap & Rotor Kit - Replacement	$40.99
50681	57-62	Distributor Points & Condensor Kit	$40.99
41131	53-54	Distributor Condensor	$9.99
37120	56-62	Distributor Felt Washer	$1.99
27458	55-62	Distributor Gear - Lower	$29.99
27459	55-62	Distributor Gear Washer - Under Gear	$4.99
41139	56-62	Distributor Gear Pin	$0.99
27443	56-62	Distributor Hold Down w/ Bolt	$11.99
27444	60-62	Distributor Hold Down Clamp w/ Bolt - wire	$14.99
41134	53-54	Distributor Lead Wire	$13.99
22120	55	Distributor Lead Wire - V8 Dist. #01110847	$29.99
51026	58-62	Distributor Lead Wire	$13.99
27455	62	Distributor Lead Wire	$7.99
37119	56-62	Distributor Lead Wire Grommet	$3.99
27446	55-62	Distributor Mount Gasket	$1.99
51207	56-62	Distributor Hold Down w/ Bolt	$7.99
41130	53-54	Distributor Points	$15.99
41129	53-54	Distributor Rotor	$8.99
27450	57-62	Distributor Rotor - Exc. Dual Point	$7.99
27449	58-61	Distributor Rotor - Dual Points Exc. F.I.	$11.99
41138	62	Distributor Base Plate	$27.99
42170	62	Distributor Cam Lubricant	$4.99
X2113	62	Distributor Shaft	$61.99
36510	62	Distributor Shaft - 300/340 hp	$73.99
27456	62	Distributor Shaft Bushings Set	$16.99
53310	62	Distributor Shaft Bushing - Upper	$8.99
53311	62	Distributor Shaft Bushing - Lower	$8.99
27457	62	Distributor Shaft Bushings Tool	$9.99
27460	55-62	Distributor Shim Kit - 5 pc	$8.99
41137	62	Distributor Shaft Sleeve	$1.99
29079	62	Distributor Small Parts Kit	$13.99
27445	58-62	Distributor Spacer - FI	$41.99
34930	56-62	Distributor Spring & Weight Kit	$16.99
42169	62	Distributor Spring Clip	$5.99
35423	56-62	Distributor Tune-up Kit - Rotor, Standard Points & Condensor	$29.99
33569	59-62	Distributor Vacuum Advance	$24.99
K1378	62	Distributor Vac Adv Mount Screw & Washer	$1.99
X32672	62	Distributor Side Gear - Tach Drive	$30.99
X2557	62	Distributor Side Gear Button - Bronze	$6.99
X2556	62	Distributor Side Gear Coupler	$16.99
32673	62	Distributor Side Gear Washer	$1.99
X2601	62	Gear, Coupler, Washer & Button Set - Stock	$40.99
X2521	62	Tachometer Cable Adapter - Eliminates 90° bend in cable, dramatically reducing wear	$40.99
51337	62	Distributor Delco-Remy ID Tag	$30.99
35425	59-62	F.I. Coil Condensor Mount Bracket	$9.99
35418	58-62	F.I. Distributor Deluxe Rebuild Kit - Gaskets, Seals & Fasteners	$56.99
27453	58-62	Ignition Condenser - Exc. Dual Point	$10.99
27454	58-61	Ignition Condenser - Dual Point	$10.99
K1434	56-62	Ignition Condenser Screw	$1.99
27440	56-61	Ignition Point - Dual Point	$19.99
27451	58-62	Ignition Point - Exc. Dual Point	$22.99
K1435	56-62	Ignition Point Screws - pr	$1.99
34925	56-62	Ignition Switch Nut Wrench	$10.99

MADE BY Corvette America

TACH DRIVE GEAR ASSEMBLIES

Stainless steel or bronze couplings with gear and permanently lubricated needle bearings. Outlasts originals by years!

1596	62	Bronze Drive Gear Assembly	$81.99
1595	62	Stainless Steel Drive Gear Assembly	$81.99

1956-1962 NON F.I. DISTRIBUTOR ('62 SHOWN)

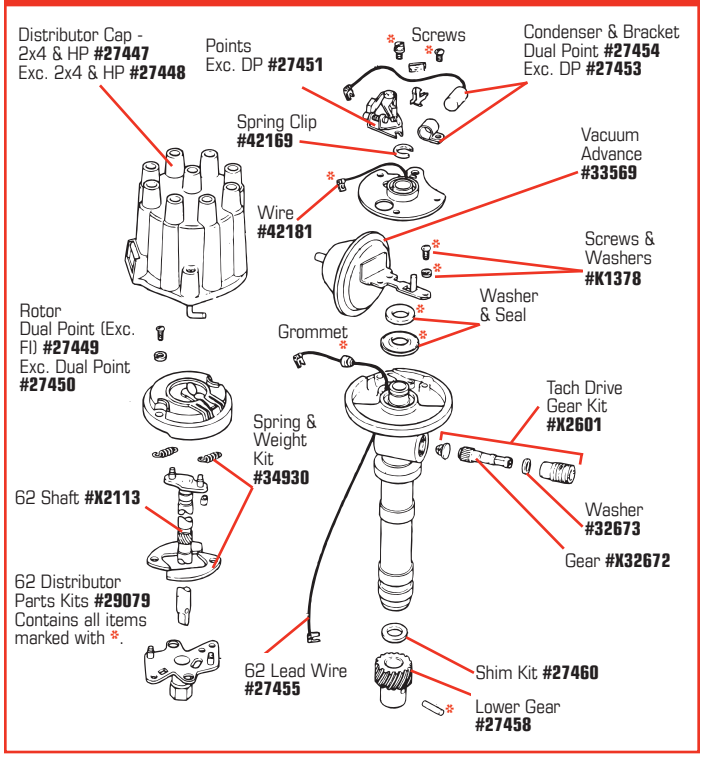

800-458-3475
CorvetteAmerica.com

WARNING: Cancer and Reproductive Harm — www.P65Warnings.ca.gov

#32671

#41124

#51497

Tach Drive Distributor

40874	62	Distributor - Tach Drive - Rebuilt - Requires Core Charge #40875	$305.99
40875	62	Distributor Core Charge	$305.99
32671	62	Distributor - Tach Drive - Dual Point	$468.99
29940	62	Distributor - Tach Drive - Single Point	$473.99
41126	57-61	Distributor - Rebuilt #891-57 220, 245 & 270 hp, 58-61 245 & 270 hp	$494.99
41124	58	Distributor - Rebuilt 230 hp #890	$309.99
41125	59-61	Distributor - Rebuilt 230 hp #946	$284.99
51497	62	Distributor - HEI Upgrade - Tach Drive	$102.99

Performance Distributor & Ignition

Mallory components are carefully developed and thoroughly tested to deliver serious power to your ignition system so you get the maximum performance from your Corvette. Mallory Ignition components boost your ignition's performance with better timing accuracy, higher output and efficiency, and even a boost in RPM. Please Note: Not for sale or use in California on pollution-controlled vehicles.

22121	55	Mallory Distributor Lead Wire Condenser to Coil.	$29.99
22122	55	Mallory Distributor Lead Wire Condenser to Dist.	$14.99

Electronic Tachometer Conversion Kit

An electronic conversion kit that can be utilized with your factory Corvette tachometer face. Simply remove your Corvette's factory tachometer from the dash or cluster and mount the new electronic module on the back of your original tachometer face.

28841	53-62	Electronic Tachometer Conversion Kit	$176.99

Breakerless SE Ignition Kit

Convert any GM V8 breaker point distributor to a reliable, solid-state electronic ignition and keep the stock appearance! Features an integrated trigger and power module contained inside the distributor and over-current protection. No additional wires protrude from the distributor. Three-year manufacturer's warranty.

41508	57-62	Breakerless SE Ignition Kit	$171.99

#27543

#33058

#27544

#27542

#35455

Ignition Coil

51289	53-55	Coil to Coaxial Condenser Leadwire	$13.99
35455	55-62	Coil/Ballast Resistor	$8.99
37144	56-62	Coil/Ballast Resistor	$30.99
35456	55-60	Coil/Ballast Resistor Clutch Head Screw	$2.99
35457	61-62	Coil/Ballast Resistor to Firewall Screw	$1.99
41170	53-54	Coil Bracket	$37.99
27544	56-57	Coil Bracket, Figure "8"	$114.99
27545	57-62	Coil Bracket, FI	$16.99
35082	57-62	Coil Bracket Bolts - FI - pr	$5.99
K1253	56-62	Coil Bracket Screw & Washer	$2.99
42203	62	Coil Terminal Nut, Washer & Retainer Kit	$10.99
41168	53-55	Ignition Coil - 6V Correct #394	$273.99
27542	56-62	Ignition Coil - Carb #091	$101.99
27543	57-62	Ignition Coil - FI #107	$91.99
50685	54	Ignition Coil - Replacement	$45.99
33058	56-62	Ignition Coil - Replacement	$75.99

WARNING: Cancer and Reproductive Harm — www.P65Warnings.ca.gov

#51139

#51112

#51107

#51109

Performance Ignition Components from Accel

Accel Ignition Coils and Distributor Components are designed to make your Corvette's ignition perform reliably and efficiently. Accel's innovations in ignition wire and distributor technology have earned the trust of auto and performance enthusiasts everywhere. Accel delivers a better spark and more MPG's. Get started with Accel.

Note: Not for sale or use in California on pollution-controlled vehicles.

51111 58-62 Accel Distributor Cap & Rotor $35.99
51139 58-62 Accel Distributor Point Eliminator Kit $95.99
51108 58-62 Accel Distributor Rotor - exc. Dual Point $26.99
51107 58-62 Accel Ignition Point - exc. Dual Point $35.99
51109 58-62 Accel Super Coil Ignition Coil - Exc. TI..... $112.99
51112 58-62 Accel Super Stock Ignition Coil - Chrome $62.99

Performance Plug Wires from Accel

Accel Spark Plug Wires are designed to make your Corvette's ignition perform reliably and efficiently. Note: Not for sale or use in California on pollution-controlled vehicles.

51113 58-62 Accel Super Stock Spiral Spark Plug Wires..... $64.99

#23090

Economy Spark Plug Wire Sets

With genuine Packard® wiring and stock-like boots, these sets fit better and are cosmetically closer to original than GM replacement sets. Sets do not feature date-coding but it's a small sacrifice for such high-quality, low-cost replacements. For all except FI.

23090 58-62 Economy Spark Plug Set - Exc FI..... $41.99

Reproduction Spark Plug Wire Sets

When the details are important and you need the perfect fit & appearance, Reproduction Spark Plug Wire Sets provide 100% correct boots, terminals & cables. 1961-62 wires feature correct factory script.

22000 53-55 Spark Plug Wires - 6 Cylinder $56.99
22001 55 Spark Plug Wires - 8 Cylinder $169.99
22002 56-57 Spark Plug Wires..... $77.99
22003 57 Spark Plug Wires - FI $77.99
22004 58 Spark Plug Wires..... $77.99
22005 58 Spark Plug Wires - FI $77.99
22006 59-61 Spark Plug Wires - 61 Early..... $77.99
22007 61 Spark Plug Wires - 61 Late $77.99
22008 62 Spark Plug Wires - 62 Early..... $77.99
22009 62 Spark Plug Wires - 62 Late $77.99

Spark Plugs

ACDelco

50647 53-62 Spark Plug - Delco R43 ..... $2.99
50648 56-62 Spark Plug - Delco R45S $2.99
51985 56-62 Spark Plugs - Non Resistor #43 w/Green Strip - 8 pc set..... $60.99
51986 56-62 Spark Plugs - Non Resistor #44 w/Green Strip - 8 pc set..... $60.99
51987 56-62 Spark Plugs - Non Resistor #45 w/Green Strip - 8 pc set..... $60.99
52065 56-62 Spark Plugs - Resistor #43S W/Green Strip 8 pc set..... $60.99
52066 56-62 Spark Plugs - Resistor #44S W/Green Strip 8 pc set..... $60.99
52067 56-62 Spark Plugs - Resistor #45S W/Green Strip 8 pc set..... $60.99

WARNING: Cancer and Reproductive Harm — www.P65Warnings.ca.gov

#41172

#33654

#27546

#36526

Starter & Electrical

35459	53-62	Engine Compartment Wire Harness Clips & Screws - 20 pc set	$48.99
40378	58-62	Fuse Block Repair Kit	$126.99
41172	57-62	Starter Motor - 62 Manual	$115.99
36526	62	Starter Motor - 327 Reconditioned	$115.99
33087	53-62	Starter Bolt Shim Kit - 5 pc	$6.99
K1327	56-62	Starter Bolts - 3 pc set	$4.99
27548	57-62	Starter Motor Brace	$13.99
27549	62	Starter Motor Brace - Automatic	$13.99
50684	53-54	Starter Solenoid	$91.99
33654	55-62	Starter Solenoid	$53.99
K1333	56-62	Starter Solenoid Terminal Nuts & Lockwashers Set	$5.99
41171	53-54	Voltage Regulator - Replacement	$91.99
27546	55-61	Voltage Regulator - Delco Replacement	$106.99
27547	62	Voltage Regulator - Delco Replacement	$89.99
35458	56-62	Voltage Regulator Mount Screws - 3 pc	$3.99

Tune-Up Kits

Engine Tune-Up Kits include air cleaner element (where applicable), oil filter, distributor cap and rotor, spark plugs and wires.

41165	55-57	Engine Tune-up Kit	$152.99
41166	58-62	Engine Tune-up Kit - 58-61 Exc HP - 62 All	$126.99
41167	58-61	Engine Tune-up Kit - Dual Point - w/o FI	$142.99

Intake Manifolds

These Manifolds Do Not Have A Provision For An Oil Filler Tube So They Require Use With Valve Covers With An Oil Filler Hole. Holley Spreadbore carb will not work with this manifold.

41760	57-62	Intake Manifold - Small Block - Polished	$274.99
41761	57-62	Intake Manifold - Small Block - Satin	$203.99

#0583

#27578

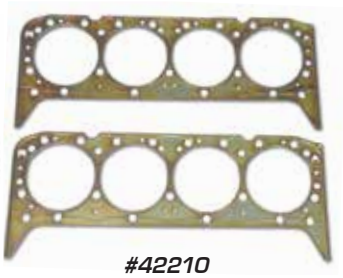

#42210

Gaskets & Seals

Our Engine Compartment Seal Kits contain all the seals commonly replaced in each application listed below. All are correct reproductions of the original seals.

0580	58-62	Engine Compartment Seal Kit - 1 x 4	$103.99
0581	58-61	Engine Compartment Seal Kit - 2 x 4	$119.99
0582	58-62	Engine Compartment Seal Kit - FI	$111.99
0583	60-61	Engine Compartment Seal Kit - 2 x 4 (Tank Top Radiator)	$111.99
0585	61	Engine Compartment Seal Kit - 1 x 4 (Tank Top Radiator)	$106.99
27585	57-62	Engine Gasket Set	$47.99
27577	56-57	Firewall & Body Grommet Set - 20 pc	$54.99
27578	58-62	Firewall & Body Grommet Set - 25 pc	$64.99
32942	56-62	Firewall Grommet - Heater Hose	$4.99
35468	56-62	Firewall Grommet - 1 3/8"	$5.99
27328	53-62	Firewall Grommets - 7/8" - 9 pc	$20.99
35469	53-62	Firewall Grommet - 4 Hole	$5.99
42210	55-62	Head Gaskets - pr	$27.99
42207	55-62	Head Gasket - Small Block	$12.99
27579	56-62	Intake Manifold Gasket Set exc. FI	$23.99
27580	57-62	Intake Manifold Gasket Set, FI	$39.99

WARNING: Cancer and Reproductive Harm — www.P65Warnings.ca.gov

Ignition Shielding Sets

Typical set includes:

- 1 Top Shield
- 3 Top Shield Hex Bolts
- 2 Top Shield Brackets - LH & RH
- 2 Vertical Shields - LH & RH
- 1 Ignition Shield Bracket - Lower LH
- 2 Spark Plug Shields - LH & RH
- 4 Spark Plug Shield Brackets
- 8 Wing Nuts
- 4 Spark Plug Wire Grommets

Complete the Kit with **X2582** Heat Shield Set

6180	56-59	Ignition Shield Set - Carbureted	$655.99
6181	60	Ignition Shield Set - Carbureted	$579.99
6182	61	Ignition Shield Set - Carbureted	$579.99
6183	62	Ignition Shield Set - Carbureted	$579.99
6184	57	Ignition Shield Set - FI	$675.99
6185	58-59	Ignition Shield Set - FI	$629.99
6186	60	Ignition Shield Set - FI	$533.99
6187	61	Ignition Shield Set - FI	$561.99
6188	62	Ignition Shield Set - FI	$619.99

1956-1962 IGNITION SHIELDING

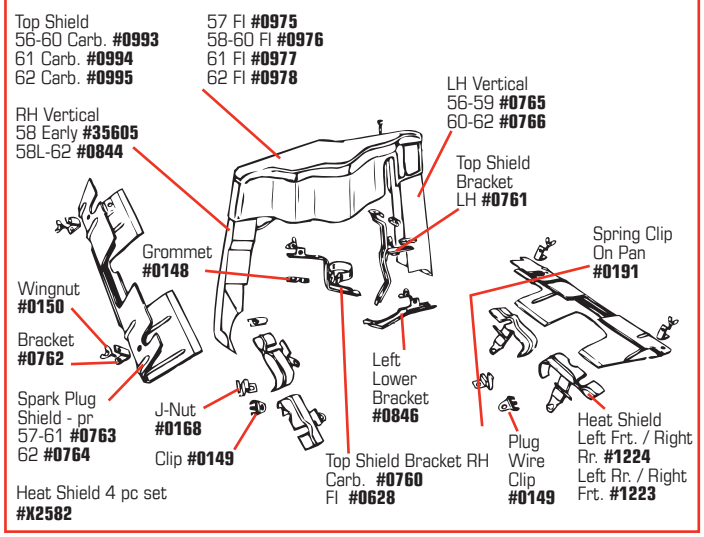

Ignition Shielding Components

1224	57-62	Heat Shield - LF/RR (2 req'd)	$9.99
1223	57-62	Heat Shield - LR/RF (2 req'd)	$9.99
X2582	57-62	Heat Shield Kit - Does both sides - 4 pc	$30.99
0168	56-62	J-Nut - RH Vertical	$0.99
0765	56-59	LH Vertical Shield	$46.99
0766	60-62	LH Vertical Shield	$33.99
35605	56-58	RH Vertical Shield - 58 Early - has round lower mount hole	$88.99
0844	58-62	RH Vertical Shield - 58 Late	$88.99
37401	57-62	Ignition Shield Bracket/Heat Shield Bracket Bolt	$5.09
0763	57-61	Spark Plug Shields - pr	$136.99
0764	62	Spark Plug Shields - pr	$136.99
0762	56-62	Spark Plug Shield Bracket	$3.99
0149	56-62	Spark Plug Wire Clip - On Block	$4.99
0191	56-62	Spring Clip - On Oil Pan	$3.99
0148	56-62	Spark Plug Wire Grommet - Oval	$2.99
35603	56-57	Spark Plug Wire Lower "U" Heat Shields w/ Grommets - pr	$35.99
35606	62	Spark Plug Wire Support - Lower RR - four holes on one side - 62 w/ PCV	$17.99
0846	56-62	Spark Plug Wire Support Bracket - LH	$14.99
0993	56-60	Top Shield - Carbureted	$251.99
0994	61	Top Shield - Carbureted	$251.99
0995	62	Top Shield - Carbureted	$251.99
0975	57	Top Shield - FI	$255.99
0976	58-60	Top Shield - FI	$276.99
0977	61	Top Shield - FI	$276.99
0978	62	Top Shield - FI	$274.99
0979	56-61	Top Shield Bolt (3 req'd)	$1.09
0276	62	Top Shield Bolt	$1.99
0761	56-62	Top Shield Bracket - LH	$29.99
0760	56-62	Top Shield Bracket - RH	$31.99
0628	57-62	Top Shield Bracket - FI - RH	$24.99
0150	56-62	Wingnut	$1.99

1955-1962 ENGINE

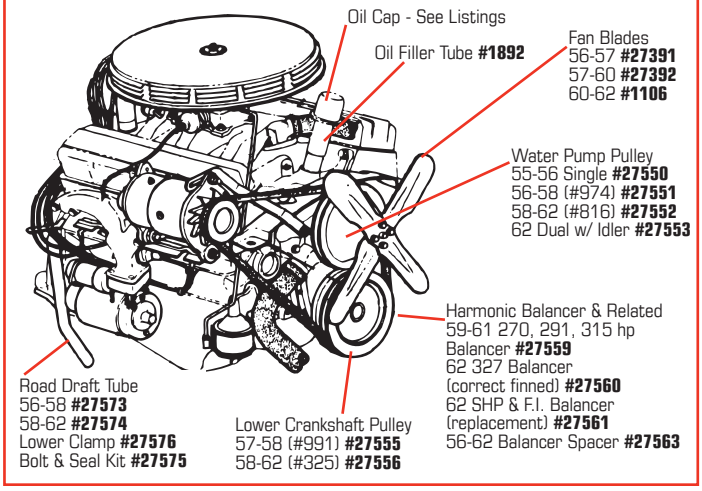

FAST Shipping!

Fast Service & Delivery!

Most orders are processed & shipped the same day!

800-458-3475
CorvetteAmerica.com

WARNING: Cancer and Reproductive Harm — www.P65Warnings.ca.gov

#32539

#32546

#34962

#34963

Timing

35464	55-62	Dowel Pins for Timing Chain Cover - pr	$2.99
32539	57-62	Timing Chain & Gears - Double Roller Set	$35.99
32546	62	Timing Chain & Gears Set	$45.99
34962	55-62	Timing Chain Cover - Exc 62 340/360 hp	$79.99
34963	62	Timing Chain Cover w/ Tab - 327 Hi-Perf.	$79.99
37168	57-62	Timing Chain Cover - 327 Chrome	$21.99
51096	57-62	Timing Chain Cover Kit - 327 Chrome	$26.99
33089	56-62	Timing Chain Cover Gasket Set	$17.99
K1312	55-61	Timing Chain Cover Screws - 10 pc	$5.99
32535	62	Timing Chain Cover Bolts - 12 pc	$8.99
35463	57-62	Timing Chain Cover Tab w/ 8" Balancer	$7.99
32536	62	Timing Chain Cover Tab - 340 HP	$15.99

#27559

#27560

#27561

Pulleys & Balancers

27559	59-61	Engine Crankshaft Balancer - 270,290,315 hp	$305.99
27560	62	Engine Crankshaft Balancer - 327 (Correct Finned)	$466.99
27561	62	Engine Crankshaft Balancer - SHP & FI - Repl	$104.99
27562	62	Harmonic Balancer Bolt Kit, SP/SHP	$10.99
K1381	60-62	Harmonic Balancer Pulley Mount Bolts - Exc SHP	$2.99
35462	58-62	Harmonic Balancer Rebuild Kit	$47.99
27563	56-62	Harmonic Balancer Spacer	$7.99
27565	62	Idler Pulley w/ Bracket, Hi-Performance	$137.99
27566	62	Idler Pulley Mount Stud Kit, Hi-Performance	$12.99
27555	57-58	Lower Crankshaft Pulley - #991 - 58E	$122.99
27556	58-62	Lower Crankshaft Pulley - #328 - 58L	$104.99
27570	62	Lower Crankshaft Pulley - Replacement	$68.99

#27573

#32538

Crankcase Ventilation

32538	55-62	Crankcase Ventilator Can-Mounts Inside Engine	$55.99
27573	56-58	Road Draft Tube - 58 Early	$113.99
27574	58-62	Road Draft Tube - 58 Late	$109.99
27575	56-62	Road Draft Tube Bolt & Seal Kit	$2.99
27576	56-62	Road Draft Tube Lower Clamp	$12.99

#27572

#23025

Engine Mount & Cushions

23026	53-62	Engine Mount Bolt Kit - "UR" Headmark	$16.99
27572	56-62	Engine Mount Brackets - pr	$419.99
32496	56-62	Engine Mount Bracket Bolts - 8 pc	$12.99
23028	53-62	Engine Mount Cushions - 4 pc	$45.99
35465	55-62	Frame to Engine Mount Brackets - Weld On - pr	$60.99
23025	58-60	Front Engine Mount Bracket	$177.99
0102	61-62	Front Engine Mount Bracket	$165.99

1953-1962 ENGINE MOUNT

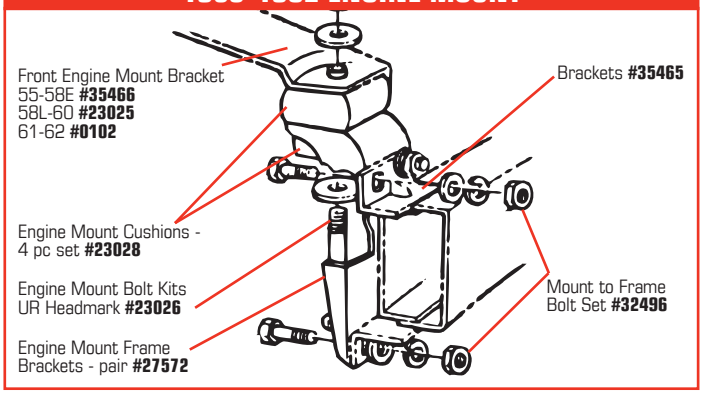

Engine - Miscellaneous

32509	56-62	Aluminum Intake Manifold Washer Set - 12 pc	$3.99
K1382	56-62	Engine Comp. Phillips Head Screws - 10 pc set	$3.99
1598	56-62	Engine Paint - Orange	$10.99
27581	57-62	Freeze Plug	$4.99
35479	55-62	Head Bolt Set - Does one head	$42.99
32499	55-62	Intake Manifold Bolt Set - 12 pc	$16.99

WARNING: Cancer and Reproductive Harm — www.P65Warnings.ca.gov

#40181

#42221

#37142

#37141

#27515

#2335

#27516

#27517

#2338

#27539

#27537

Valve Covers

32497	56-60	Temperature Wire Brackets on Valve Cover 60 Early - pr	$9.99
32498	60-62	Temperature Wire Brackets on Valve Cover 60 Late - pr	$7.99
1915	56-59	Valve Cover - 2x4 and FI	$79.99
40181	59-61	Valve Cover - 2x4 and FI - w/ Flaw (Correct)	$86.99
42221	59-62	Valve Cover - 2x4, FI & SHP - w/o Flaw	$163.99
37142	62	Valve Covers - 327 Chrome - pr	$137.99
37141	62	Valve Covers - 327 Steel Orange Paint - pr	$111.99
41160	53-55	Valve Cover Bolts w/ Reinforcements - 8 pc	$5.99
K1261	56-59	Valve Cover Bolts - Alum. Covers - 8 pc set	$3.99
K1272	60-62	Valve Cover Bolts - Alum. Covers - 8 pc set	$4.99
K1268	55-62	Valve Cover Bolts - Steel Covers - 8 pc set	$3.99
32495	55-62	Valve Cover Bolt Reinf.- Steel Covers - 8 pc set	$5.99
27514	56-59	Valve Cover Gaskets Cork - 59 Early - pr	$11.99
27515	59-62	Valve Cover Gaskets Cork - 59 Late - pr	$12.99
41159	56-57	Valve Cover Stencil	$16.99

Oil System

2334	57-62	Dip Stick - Black	$24.99
2335	58-62	Dip Stick Tube Chrome	$11.99
27531	56-62	Dip Stick Tube, Lower (In Motor) 283/327	$20.99
27541	57-62	FI Distributor Oil Line Kit (Use w/ #27540)	$35.99
41162	53-54	Oil Cap - Painted 54 Early	$23.99
41163	54	Oil Cap - Chrome 54 Late	$32.99
41164	55	Oil Cap - V8 Black Painted	$34.99
27517	57-58	Oil Cap - Unvented, Solid Lifter & HP	$62.99
27519	59-61	Oil Cap - Unvented w/ Solid Lifter 61E	$60.99
27521	61-62	Oil Cap - Unvented w/ Solid Lifter 61L, 62E	$60.99
27523	62	Oil Cap - Unvented w/ Solid Lifter - Chrome 62L	$70.99
27516	56-58	Oil Cap - Vented w/ Hydraulic Lifter 56L	$60.99
27518	59-61	Oil Cap - Vented w/ Hydraulic Lifter 61E	$60.99
27520	61-62	Oil Cap - Vented w/ Hydraulic Lifter 61L, 62E	$60.99
27522	62	Oil Cap - Vented w/ Hydraul Lifter 62L - Chrome	$67.99
27538	57-62	Oil Drain Plug	$4.39
27539	53-62	Oil Drain Plug Gasket	$8.99
27537	53-62	Oil Drain Plug w/ Gasket, Magnetic	$5.99
1892	56-62	Oil Filler Tube, Silver	$17.99
27527	56-62	Oil Filter Bypass Valve w/ Gasket	$37.99
K1259	56-62	Oil Filter Bypass Valve Bolts - pr	$1.99
35454	56-62	Oil Filter Bypass Valve Gasket	$3.99
27525	58-62	Oil Filter Canister w/ Decal (PF-141)	$104.99
34959	56-62	Oil Filter Canister Gasket	$4.99
27524	56-57	Oil Filter Cartridge (PF-131)	$13.99
27526	58-62	Oil Filter Cartridge (PF-141)	$8.99
27529	57-62	PF 25 Oil Filter - Spin On	$5.99
27530	57-62	Oil Filter Conversion Kit - Spin On	$18.99
41161	53-55	Oil Line Kit	$17.99
27540	53-62	Oil Line Kit - Steel - includes 1/16" diameter tube w/ 2 brass compressions & 1 brass pipe fitting	$17.99
27534	56-62	Oil Line Fitting In Block	$2.99
33616	56-62	Oil Pan Replacement	$89.99
27535	56-62	Oil Pan Bolt Set - 18 pc	$12.99
27536	56-62	Oil Pan Gasket Set - Not for Replacement Pan	$17.99
41734	56-62	Oil Pan Gasket Set - 3/8" - For Replacement	$18.99
27582	56-62	Oil Pump - Standard	$35.99
27583	57-62	Oil Pump - High Pressure	$45.99
42562	58-62	Oil Pickup Screen	$46.99
35478	59-62	Oil Pump Shaft	$37.99

800-458-3475
CorvetteAmerica.com

WARNING: Cancer and Reproductive Harm — www.P65Warnings.ca.gov

1956-1962 OIL FILTER

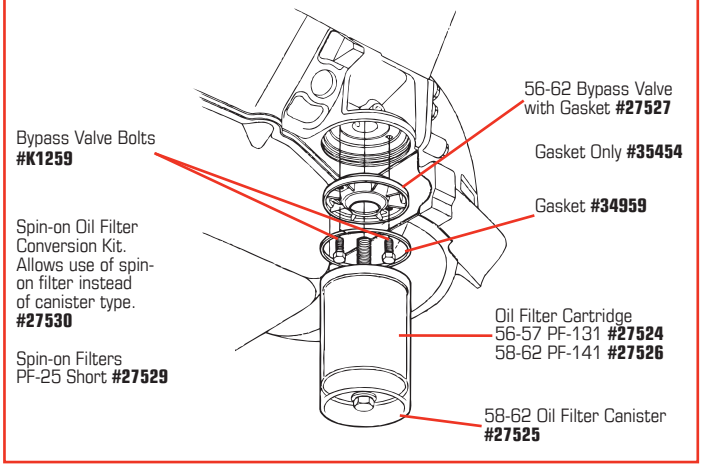

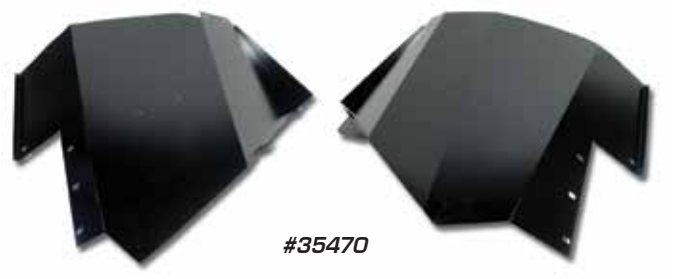

#35470

Splash Shields

35477	58-62	Inner Fender Reinforcement Screws - 48 pc	$17.99
41176	56-57	Lower Inner Fender - Cowl Reinforcements - pr	$54.99
35476	58-62	Lower Inner Fender to Cowl Reinf. - Metal - pr	$59.99
41174	53-55	Splash Shields w/ Hardware Set	$131.99
41191	55	Splash Shields 6 Cylinder	$124.99
41193	55	Splash Shields V8	$121.99
37391	56	Splash Shields - Front - pr	$75.99
37392	57	Splash Shields - Front - 4 pc set	$98.99
35470	58-62	Splash Shields - Front - pr	$99.99
37393	56-57	Splash Shield Mount Kit - Front - 68 pc	$17.99
35471	58-60	Splash Shield Mount Kit - 52 pc	$16.99
35472	61-62	Splash Shield Mount Kit - 48 pc	$16.99
35473	53-62	Splash Shield Weatherstrips - pr	$20.99
41175	56-57	Upper Inner Fender to Cowl Reinforcements - pr	$54.99
35474	58-59	Upper Inner Fender to Cowl Reinforcements - Metal - to 4/59 - pr	$59.99
35475	59-62	Upper Inner Fender to Cowl Reinforcements - Metal - after 4/59 or 59 Late - pr	$59.99

Gift Certificates

*Delivered **FREE** via First-Class Mail.*

A Great Gift for any Corvette Enthusiast!

GC025	$25 Certificate	**$25**
GC050	$50 Certificate	**$50**
GC100	$100 Certificate	**$100**
GC200	$200 Certificate	**$200**
GC300	$300 Certificate	**$300**
GC400	$400 Certificate	**$400**
GC500	$500 Certificate	**$500**

Gift Certificates are Non-Transferable and Non-Refundable.

CORVETTES at CARLISLE® PRESENTED BY Corvette America

We are proud to be the presenting sponsor of the world's largest Corvette event! Corvettes at Carlisle features more than 5,000 Corvettes of all generations.

August 22-25, 2019 • CarlisleEvents.com

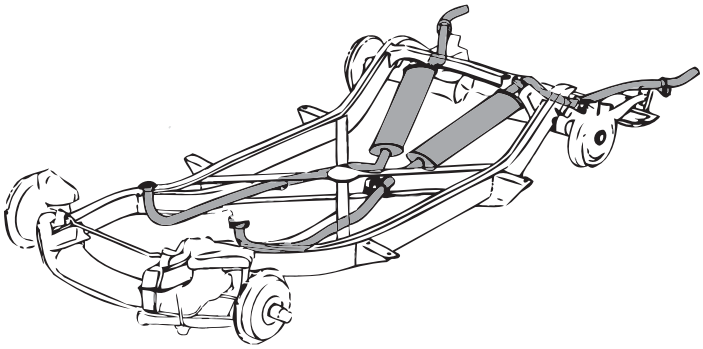

Exhaust Pipes & Mufflers

Corvette America's Complete Exhaust Systems give you convenience and flexibility with everything you need (pipes, mufflers, flanges, sleeves, donuts and clamps as required), or just the pipes and mufflers you want. Manufactured of aluminized steel to OEM specifications with the correct fit, look and sound. Round mufflers were used on high-performance engines, ovals on low horsepower ones. Glass Pack mufflers are an economical alternative. All come with welded header pipes as original.

System with Glass Pack Mufflers

35490 61-62 Low hp 1x4 - 2" **$397.99**

Systems with Round Mufflers

35483 56-57 w/o Crossover **$397.99**
35484 56-58 w/ Crossover **$463.99**
35485 59-60 w/ Crossover **$437.99**
35486 61-62 w/ Crossover - 2" **$457.99**
35487 62 w/ Crossover - 2 1/2" - HP **$457.99**

Systems with Oval Mufflers

41177 53-55 Exhaust System - 6 Cyl - No flanges included **$454.99**
41178 55 Exhaust System - V8 ..... **$428.99**
35491 56-58 Low hp 1x4 ..... **$397.99**
35492 56-58 High hp w/ Crossover **$437.99**
35493 59-60 Low hp 1x4 ..... **$398.99**
35494 59-60 High hp w/ Crossover **$436.99**
35495 61-62 Low hp 1x4 - 2" **$398.99**
35496 61-62 High hp w/ Crossover - 2" **$457.99**
35497 62 High hp - 2 1/2" w/ Crossover **$457.99**

Exhaust Pipes - Aluminized Steel

22402 59-60 Exhaust Pipes - 1x4 w/o Crossover - 2" **$239.99**
22403 59-60 Exhaust Pipes - HP, SHP - 2x4 - FI w/ Crossover - 2" **$281.99**
22404 61-62 Exhaust Pipes - 1x4 w/o Crossover - 2" **$259.99**
22405 61 Exhaust Pipes - HP, SHP - 2x4 - FI w/ Crossover - 2" **$284.99**
22406 62 Exhaust Pipes - HP, SHP w/ Crossover - 2 1/2" .. **$289.99**

Exhaust Bezels

41187 53-55 Exhaust Bezels **$182.99**

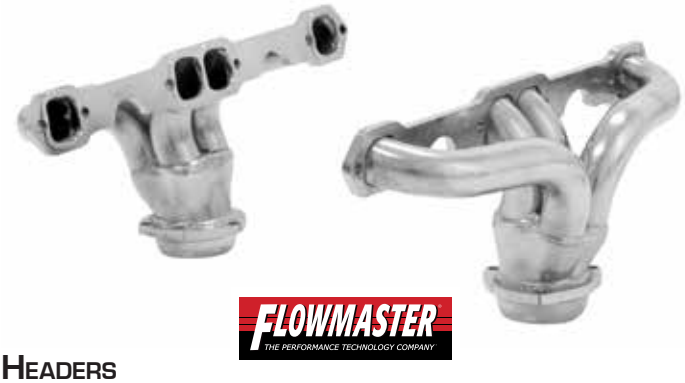

Headers

53001 57-62 Headers 409S - Flowmaster Universal Center Dump Shorty - 327/350 V8, Block Hugger - High Temp Ceramic Coating - 2.50" Ball/Socket Flange Out - Pair **$193.99**

Mufflers - Aluminized Steel

41949 56-62 Aluminized Steel Mufflers - Oval - pr **$244.99**
41950 56-62 Aluminized Steel Mufflers - Round - pr **$242.99**

Hot Stuff Manifold Dressing

Withstands temperatures up to 2400° and restores your manifold to like-new condition.

1000 Hot Stuff Manifold Dressing **$14.99**

800-458-3475
CorvetteAmerica.com
WARNING: Cancer and Reproductive Harm — www.P65Warnings.ca.gov

#20857

#20873

#29361

#27595

#27596

Exhaust Manifolds

Original production dates available where indicated.

20850	56	Manifold LH 2" - Dated - cast #3731557	$296.99
20851	56	Manifold RH 2" - Dated - cast #3731558	$356.99
20852	57	Manifold LH 2" - Dated - cast #3733975	$336.99
20853	57	Manifold RH 2" - Dated - cast #3733976	$250.99
20854	57	Manifold RH 2" FI - Dated - cast #3733976	$249.99
20855	58-62	Manifold LH 2" 283, 327 - cast #3749965	$209.99
20857	58-62	Manifold RH 2" 283, 327 - cast #3750556	$266.99
20856	58-61	Manifold RH 2" 283 FI - Dated	$226.99
20870	62	Manifold LH 2.5" 327 - cast # 3797901	$234.99
20860	62	Manifold RH 2.5" 327 - cast # 3797902	$279.99
20859	62	Manifold RH 2.5" 327 FI	$274.99
20872	62	Manifold LH 2.5" 327 - Replacement	$101.99
20873	62	Manifold RH 2.5" 327 - Replacement	$101.99
41184	55	Manifold Bolt/Washer Set - V8	$24.99
27596	57-62	Manifold Bolt Set - 12 pc	$16.99
27597	57-62	Manifold Bolt Washers - 8 pc	$6.99
27592	57-62	Manifold Choke Tube - Exc FI - SS	$18.99
29361	57-62	Manifold Gasket Set	$12.99
41183	56	Manifold Heat Shields - pr	$111.99
27595	56-62	Manifold Lock Set, Stainless Steel	$15.99

#0771

#27586

#27587

#0770

Exhaust Hangers & Retainers

35500	56-62	Exhaust Clamp - 1 3/4"	$5.99
35501	56-62	Exhaust Clamp - 1 7/8"	$6.99
35502	56-62	Exhaust Clamp - 2"	$4.99
32550	56-62	Exhaust Clamp - Stainless Steel - 1 3/4"	$12.99
32552	56-62	Exhaust Clamp - Stainless Steel - 2"	$9.99
0770	56-60	Exhaust Hanger Kit - Car Set	$148.99
0771	61-62	Exhaust Hanger Kit - Car Set	$252.99
32548	56-62	Exhaust Hanger Kit - Center at X-Frame	$59.99
32551	56-62	Exhaust Hanger Bracket - Center At X-Frame	$18.99
41179	56-60	Exhaust Hanger U-Bolt Kit - Low Perf - Fine Thread - 10 pc	$22.99
41180	56-60	Exhaust Hanger U-Bolt Kit - HP - Fine Thread - 12 pc	$26.99
41181	61-62	Exhaust Hanger U-Bolt Kit - Low Perf - Fine Thread - 8 pc	$12.99
41182	61-62	Exhaust Hanger U-Bolt Kit - HP - Fine Thread - 10 pc	$23.99
K1438	58-60	Exhaust Retainer Support Bracket Screws - 16 pc set	$4.99
32547	53-60	Muffler Hanger Kit - Over Rear Axle	$60.99
32549	61-62	Muffler Hanger Kit - Over Rear Axle	$89.99
27589	61-62	Tailpipe Hanger Kit	$65.99
27590	61-62	Tailpipe Hanger Frame Brackets - pr	$24.99
27591	56-62	Tailpipe L- Bracket to Frame Bolts - 4 pc	$3.99
27586	56-57	Tailpipe Retainers - Mount in Exhaust - Chrome	$67.99
27587	58-60	Tailpipe Retainers (in Bumper) - set	$105.99

WARNING: Cancer and Reproductive Harm — www.P65Warnings.ca.gov

1956-1962 HEAT RISER

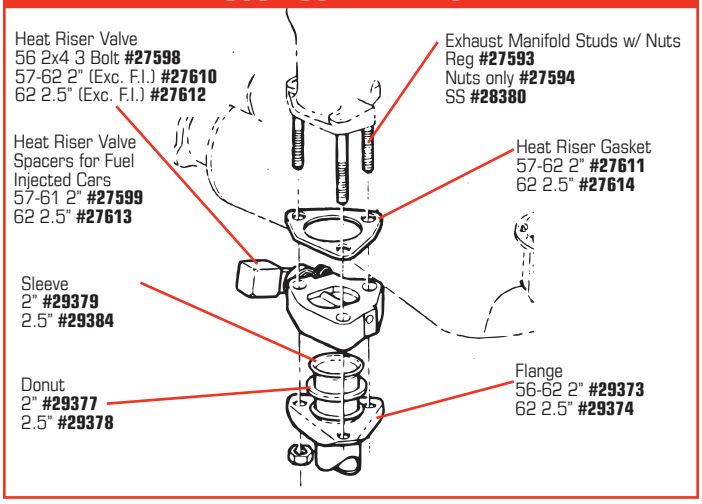

#27610

#41185

HEAT RISER

29377	57-62	Exhaust Donut - 2"	$3.99
29378	62	Exhaust Donut - 2.5"	$3.99
41185	53-55	Exhaust Pipe Flange - Cast Iron	$169.99
29373	56-62	Exhaust Pipe Flange - 2"	$7.99
29374	62	Exhaust Pipe Flange - 2.5" - Flat Type	$9.99
33739	53-62	Exhaust Pipe Sealer - 6 oz. Tube	$4.99
29379	53-62	Exhaust Sleeve - 2"	$7.99
29384	53-62	Exhaust Sleeve - 2.5"	$8.99
27598	56	Heat Riser Valve - 2x4 - 3 Bolt	$167.99
27610	57-62	Heat Riser Valve - 2" exc FI	$65.99
27612	62	Heat Riser Valve - 2.5" exc FI	$68.99
27611	57-62	Heat Riser Valve Gasket - 2"	$2.99
27614	62	Heat Riser Valve Gasket - 2.5"	$2.99
27599	57-61	Heat Riser Valve Spacer - 2" w/ FI	$47.99
51322	62	Heat Riser Valve Spacer - 2" w/o FI	$42.99
27613	62	Heat Riser Valve Spacer - 2.5" w/ FI	$50.99
23122	61-62	Exhaust Pipe Clamp - 2 Inch Flat Top U-Bolt	$20.99
27593	57-62	Manifold Studs w/ Nuts - 12 pc	$12.99
28380	57-62	Manifold Studs w/ Nuts - SS - 12 pc	$30.99
27594	56-62	Manifold Nut Set - Replacement	$7.99
35499	56-62	Manifold Nuts - Correct - Top Lock Style - 6 pc	$7.99

IN STOCK & READY FOR SHIPPING!

In addition to our regular delivery, we offer more options for getting your packages when you need them. Call our Sales Reps for details.

#25585

#25582

#0170

#43412

EXTERIOR TRIM

22556	58-62	Fender Scoop - Reproduction	$218.99
0180	58-62	Fender Top Moldings - pr	$305.99
22555	58-62	Fender Top Molding Reinforcement	$139.99
K1019	58-62	Fender Top Molding Speednut Set - 22 pc	$5.99
0156	61-62	Headlight Ring - Unpainted	$75.99
25582	61-62	Headlight Ring Extensions - pr	$46.99
27615	56-57	Headlight Ring	$154.99
27616	56-57	Headlight Ring Gaskets - pr	$11.99
K1448	62	Rocker Panel Screws - 52 pc set	$11.99
43412	62	Side Cove Molding - pr	$540.99
41189	62	Side Cove Molding Mount Kit	$5.99
0042	56-61	Side Molding Bolt - 36 req'd	$1.99
43797	56-57	Side Molding Bolt Kit - 36 pc	$36.99
43798	58-61	Side Molding Bolt Kit - 44 pc	$42.99
35504	56-57	Side Molding Car Set - 12 pc	$560.99
35506	58-61	Side Molding Car Set - 10 pc	$503.99
0986	56-61	Side Molding Door End - 2 req'd	$21.99
9019	56-61	Side Molding Door Lower - LH	$46.99
9020	56-61	Side Molding Door Lower - RH	$46.99
9017	56-61	Side Molding Door Upper - LH	$46.99
9018	56-61	Side Molding Door Upper - RH	$46.99
9022	56-61	Side Molding Fender Lower - LH	$50.99
9023	56-61	Side Molding Fender Lower - RH	$46.99
24017	56-57	Side Molding Fender Upper - Front - pr	$69.99
40564	56-57	Side Molding Fender Upper - Rear - LH	$98.99
40565	56-57	Side Molding Fender Upper - Rear - RH	$98.99
27623	58-61	Side Molding Fender Upper - LH	$135.99
27624	58-61	Side Molding Fender Upper - RH	$135.99
27622	56-61	Side Molding Mount Kit w/ Nut & Washer	$72.99
0256	56-61	Side Molding Retainer - 4 req'd	$3.99
K1338	56-57	Side Molding Screws - Fender Upper - 4 pc	$1.99
X2066	58-61	Side Spear Set - 6 pc	$203.99
25312	58-61	Side Spear - Center LH	$40.99
25313	58-61	Side Spear - Center RH	$40.99
25314	58-61	Side Spear - Lower LH	$40.99
25315	58-61	Side Spear - Lower RH	$40.99
25310	58-61	Side Spear - Upper LH	$45.99
25311	58-61	Side Spear - Upper RH	$40.99
X2067	58-61	Side Spear Backplates - pr	$14.99
32553	58-61	Side Spear Reinforcement Plates - SS - set	$37.99
K1020	58-61	Side Spear Speednut Set - 18 pc	$3.99
25585	58-60	Rear Reflector Kit - 2 Refl., 2 Bezels & Mnt Kit	$87.99
28620	58-60	Rear Reflector - Red	$23.99
0170	58-60	Rear Reflector Bezel - Chrome	$24.99
41190	58	Trunk Spear Speednuts - 6 pc - 2 req'd	$16.99

800-458-3475
CorvetteAmerica.com

WARNING: Cancer and Reproductive Harm — www.P65Warnings.ca.gov

#X2066 *Save with the Complete Set!*

1956-1962 EXTERIOR TRIM

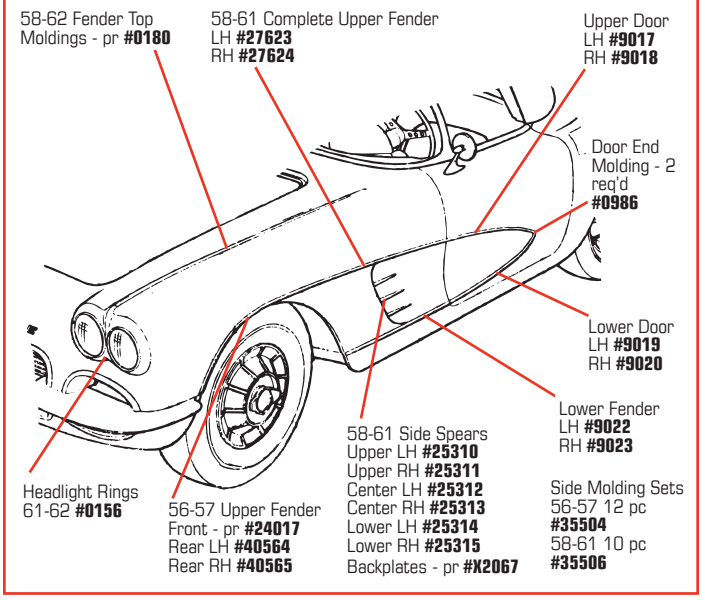

1958-1961 SIDE SPEARS

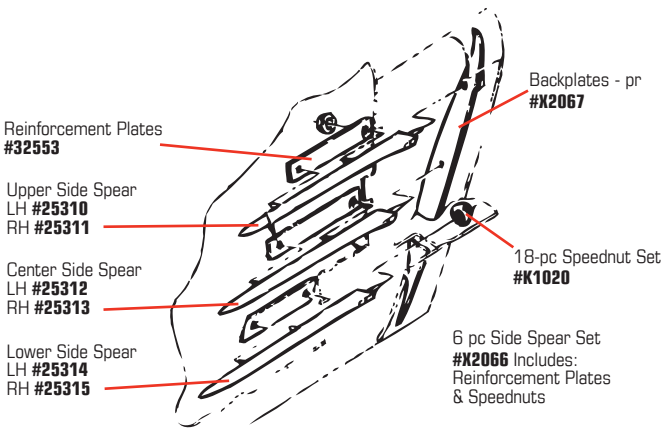

Rocker Panels

This part runs from the middle of the rear wheel well to the front of the door.

43515 61-62 Rocker Panel - LH - w/ Rear Qrt Panel Front **$356.99**
43516 61-62 Rocker Panel - RH - w/ Rear Qrt Panel Front..... **$356.99**

WARNING: Cancer and Reproductive Harm — www.P65Warnings.ca.gov

TOP FLIGHT ACCOUNT

For the Corvette owner Restoring a Classic!

Hundreds of customers have taken advantage of the exclusive offers and special pricing by enrolling in Corvette America's Top Flight Program. Whether you work on one car or multiple Corvettes, our Top Flight Program will help you complete your projects. Your projects will fly with Corvette America's TOP FLIGHT ACCOUNT Program!

800-458-3475 or 717-667-3004

Serving the Corvette Community Since 1977.

1958-1962 FRONT END

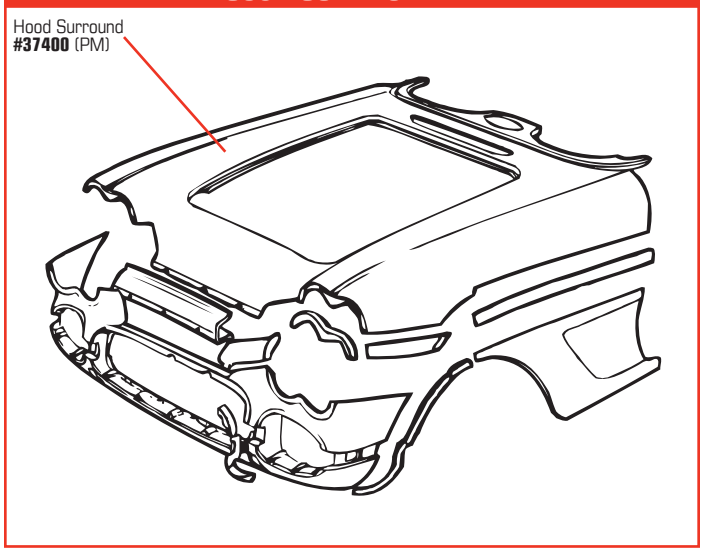

1956-1960 REAR BODY

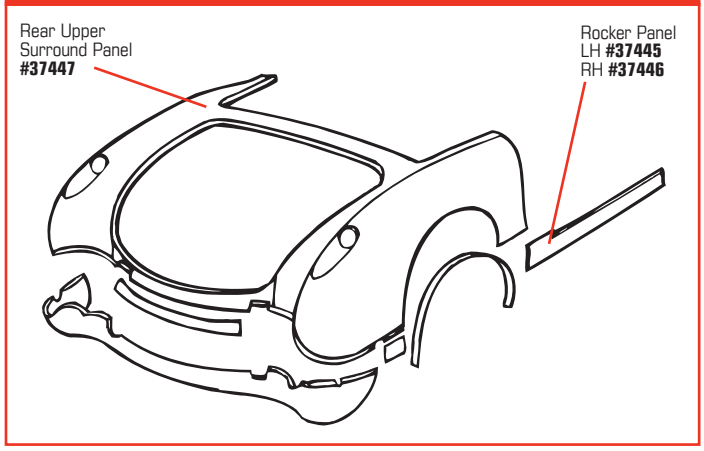

1956-1960 Rear Body Components

🚚 **37445**	56-60	Rocker Panel - LH - Press Molded	$310.99
🚚 **37446**	56-60	Rocker Panel - RH - Press Molded	$310.99
🚚 **37447**	56-60	Rear Upper Surround Panel	$1223.99
🚚 **25625**	56-60	Gas Filler Panel	$162.99

1958-1962 Front End Components

37424	58-62	Front Lower Panel to Inner Skirt Bonding Strip - LH - Press Molded	$60.99
37425	58-62	Front Lower Panel to Inner Skirt Bonding Strip - RH - Press Molded	$60.99
0040	56-57	Hood	$697.99
🚚 **0120**	58	Hood	$697.99
🚚 **0179**	59-60	Hood	$652.99
37374	53-57	Lower Dash Panel - Fiberglass	$303.99
🚚 **37375**	56-57	Hood Surround with Upper Dash - PM	$1376.99
🚚 **37400**	58-62	Hood Surround with Upper Dash - PM	$1376.99
🚚 **25244**	58-62	Inner Skirt - LH	$310.99
🚚 **25245**	58-62	Inner Skirt - RH	$310.99
35474	58-59	Inner Skirt to Cowl Reinforcement Upper - pr	$59.99
35475	59-62	Inner Skirt to Cowl Reinforcement Upper - pr	$59.99
35476	58-62	Inner Skirt to Cowl Reinforcement Lower - pr	$59.99
35477	58-62	Inner Skirt Reinforcement Screw Set - 48 pc	$17.99
37433	58-62	Nose Panel Headlight Harness Clip Set - 4 pc	$18.99
37430	58-62	Nose Support Rod	$23.99
37431	58-62	Nose Support Rod Bracket w/ Rivets - set	$13.99
37432	58-62	Nose Support Rod Bolts - 2 pc	$7.99
37391	56	Splash Shields - pr	$75.99
37392	57	Splash Shields - 4 pc set	$98.99
37393	56-57	Splash Shield Mount Kit - 68 pc	$17.99
35473	56-57	Splash Shield Weatherstrip - pr	$20.99
35470	58-62	Splash Shields - pr	$99.99
35471	58-60	Splash Shield Mount Kit - 52 pc	$16.99
35472	61-62	Splash Shield Mount Kit - 48 pc	$16.99
35473	58-62	Splash Shield Weatherstrip - pr	$20.99

🚚 = Shipped by truck freight. **PM** = Press Molded

Transmission Tunnels

37397	53-55		$376.99
37398	56-60		$315.99

Body Assembly Rivets

K1319	53-62	Roundhead Rivet Set - 25 pc (1/8" x 1/2")	$5.99
K1449	53-62	Countersunk Flathead Rivet Set - 25 pc (3/16" x 1/2")	$6.99

Corvette America

Serving the Corvette Community Since '77

800-458-3475 • CorvetteAmerica.com

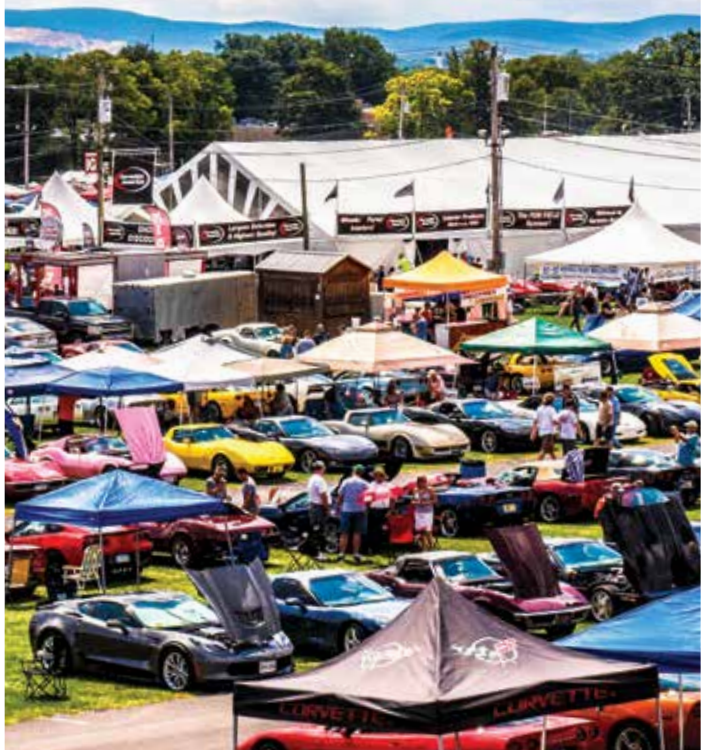

800-458-3475
CorvetteAmerica.com

WARNING: Cancer and Reproductive Harm — www.P65Warnings.ca.gov

FRAME & BODY COMPONENTS

27635	53-62	Frame Crossmember Front Extension Rail - RH	$222.99
27280	53-62	Frame Crossmember Front Extension Rail - LH	$222.99
25344	53-60	Frame Crossmember - Over Rear Axle	$336.99
25349	61-62	Frame Crossmember - Over Rear Axle	$483.99
25345	53-55	Frame Crossmember - Rear	$450.99
25486	56-62	Frame Crossmember - Rear - Exc. 58-60	$498.99
27281	53-62	Front Body Mount Bracket - Side Frame	$55.99
25347	53-62	Front Crossmember Support Bracket - LH	$57.99
25346	53-62	Front Crossmember Support Bracket - RH	$87.99
27282	53-62	Rear Body Mount Bracket - Side Frame - LH	$79.99
27636	53-62	Rear Body Mount Bracket - Side Frame - RH	$83.99
22162	56-62	Frame Stencil	$30.99

1953-1962 FRAME

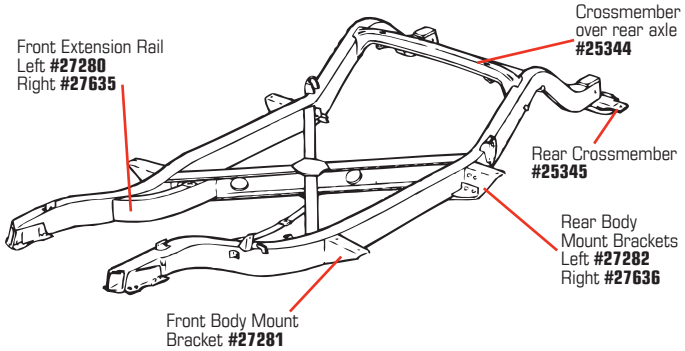

CHASSIS RESTORATION KIT

Includes stencils, paints, markers, tape and bulletins for 100% correct chassis restoration. Specify VIN for correct frame stencils.

22150	56-62	Chassis Restoration Kit	$142.99

1956-1962 BODY REINFORCEMENTS

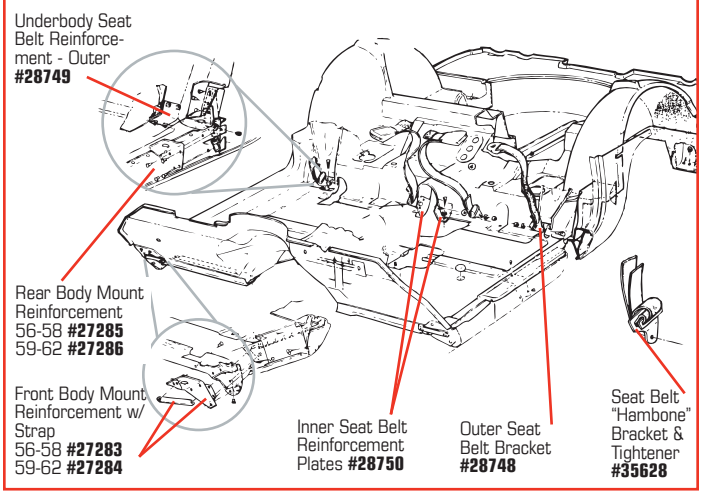

BODY REINFORCEMENTS

35748	56-62	Driveshaft Underbody Metal Scatter Shield	$44.99
27283	56-58	Front Body Mount Reinforcements w/ Strap - Aluminum - pr	$79.99
27284	59-62	Front Body Mount Reinforcements w/ Strap - Steel - pr	$84.99
25763	56-62	Body Mount Reinforcement - Steel	$58.99
28750	56-62	Inner Seat Belt Reinforcement Plates - pr	$45.99
28748	56-62	Outer Seat Belt Bracket	$35.99
28749	56-62	Outer Seat Belt Underbody Reinforcement	$20.99
27285	56-58	Rear Body Mount Reinforcements - Alum - pr	$66.99
27286	59-62	Rear Body Mount Reinforcements - Steel - pr	$49.99
35628	56-62	Seat Belt Floor "Hambone" Bracket and Tightener	$32.99
40491	62	Seat Belt "D" Ring Only - Late 62	$21.99
35516	56-60	Underbody Retainer Plates - 22 pc set - includes seat hold down, trunk hinge, gas tank strap plates, gas tank strap retainer & outer seat belt plates	$117.99
35517	61-62	Underbody Retainer Plates - 18 pc set	$111.99
K1314	53-62	Body Assembly Rivets - Aluminum - Round Head - 3/16" x 1/2" - 25 pc set	$7.99
35511	56-62	Body Mount Bolts - "TR" - 10 pc set	$24.99
35509	53-62	Body Mount Cardboard Shims - 10 pc set	$23.99
2660	53-57	Body Mount Kit	$81.99
2661	58-62	Body Mount Kit	$81.99
35508	53-62	Body Mount Metal Shims - 10 pc set	$29.99
35510	53-62	Body Mount Rubber Pads - Ribbed - 8 pc set	$16.99
22176		Frame Paint - Quart	$31.99

1956-1962 BODY MOUNTS

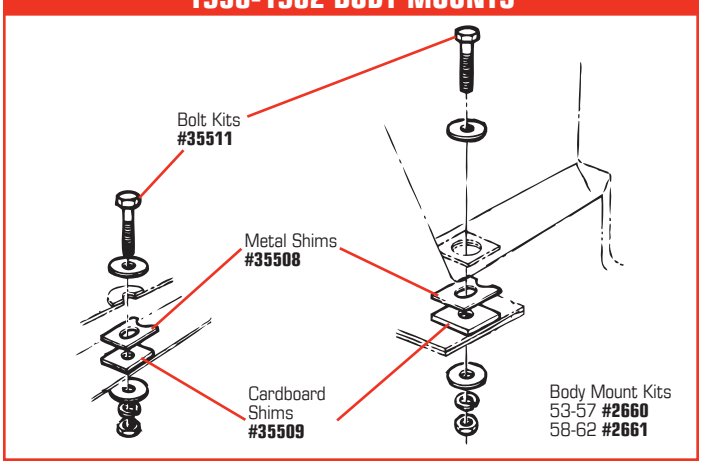

WARNING: Cancer and Reproductive Harm — www.P65Warnings.ca.gov

#27667

#27673

GAS CAPS & GAS FILLER NECK

51149	53-62	Gas Cap - Aftermarket Replacement	$5.99
51150	53-62	Gas Cap - Metal Locking w/ 2 Keys	$14.99
27667	53-62	Gas Cap - Locking - Black w/ 2 Keys	$15.99
35543	53-62	Gas Cap - Replacement	$28.99
32562	61-62	Gas Door Spring - 62 E	$8.99
32557	62	Gas Door Spring - 62 L	$8.99
32556	53-60	Gas Door Stops & Screws - pr	$5.99
27321	61-62	Gas Door Stop	$1.99
27672	56-60	Gas Filler Neck	$66.99
27673	61-62	Gas Filler Neck	$66.99
27675	53-62	Gas Filler Neck Connector Hose w/ Clamps	$44.99
27674	53-62	Gas Filler Neck Grommet	$9.99

#X2625

GAS TANK SENDING UNITS

X2625	56-61	Gas Tank Sending Unit	$61.99
X2626	61-62	Gas Tank Sending Unit	$61.99
42840	56-62	Gas Tank Sending Unit Float	$8.99
35542	53-62	Gas Tank Sending Unit Gasket	$4.99
32555	53-62	Gas Tank Sending Unit Screws - 5 pc set	$5.99
33139	53-62	Gas Tank Sending Unit Strainer	$8.99

1956-1962 GAS TANK

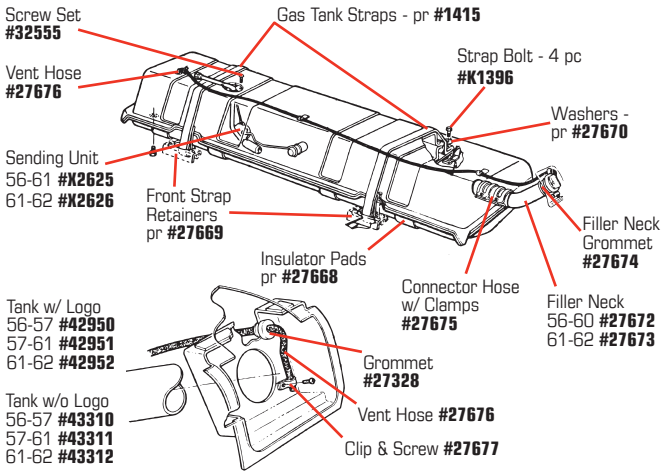

#42951

#35543

#43311

MADE BY Corvette America

GAS TANKS

Our Reproduction Gas Tanks are manufactured with corrosion-resistant steel and have the same shape, indents, welds and connections as the original tanks. For true reproduction accuracy, we now offer tanks stamped with the O. L. Anderson Logo, manufacturer of the original Corvette tanks! #42951 and #43311 include Vent. #42952 and #43312 include Vent and Baffles.

42950	56-57	Gas Tank - 57E - w/ O.L. Anderson Logo	$279.99
43310	56-57	Gas Tank - 57E - w/o Logo	$213.99
42951	57-61	Gas Tank - 57L-61E - w/ O.L. Anderson Logo	$279.99
43311	57-61	Gas Tank - 57L-61E - w/o Logo	$184.99
42952	61-62	Gas Tank - 61L - w/ O.L. Anderson Logo	$279.99
43312	61-62	Gas Tank - 61L - w/o Logo	$256.99
35544	56-62	Gas Tank Filler Drain Hose	$5.99
28411	56-62	Gas Tank Filler Drain Hose Nipple	$3.99
28641	56-62	Gas Tank Fiberglass Cover	$203.99
32684	53-62	Gas Tank Cover Caulk Strip	$7.99
41224	53-55	Gas Tank Cover Felt - Tan	$89.99
32846	56-62	Gas Tank Fiberglass Cover Felt	$48.99
K1379	53-61	Gas Tank Cover Screw & Nut Set - 54 pc	$15.99
35696	61-62	Gas Tank Cover Screw & Nut Set - 45 pc	$15.99
27668	53-62	Gas Tank Mount Insulator Pads - pr	$7.99
1415	53-62	Gas Tank Straps - pr	$24.99
1418	53-62	Gas Tank Strap.	$11.99
K1396	53-62	Gas Tank Strap Mount Bolts - 4 pc	$2.99
32554	56-62	Gas Tank Strap Rear Underbody Nut Plate	$9.99
27669	53-62	Gas Tank Strap Retainers - Front - pr	$13.99
27670	56-62	Gas Tank Strap Retainer Washers - Rear - pr	$7.99
27676	57-62	Gas Tank Vent Hose	$9.99
27677	57-62	Gas Tank Vent Hose Clip w/ Screw	$4.99
27328	57-62	Gas Tank Vent Hose Grommet - 9 pc set	$20.99

Discounts & Coupons Emailed!
Enter your email address on CorvetteAmerica.com

WARNING: Cancer and Reproductive Harm — www.P65Warnings.ca.gov

1956-1962 FUEL SUPPLY

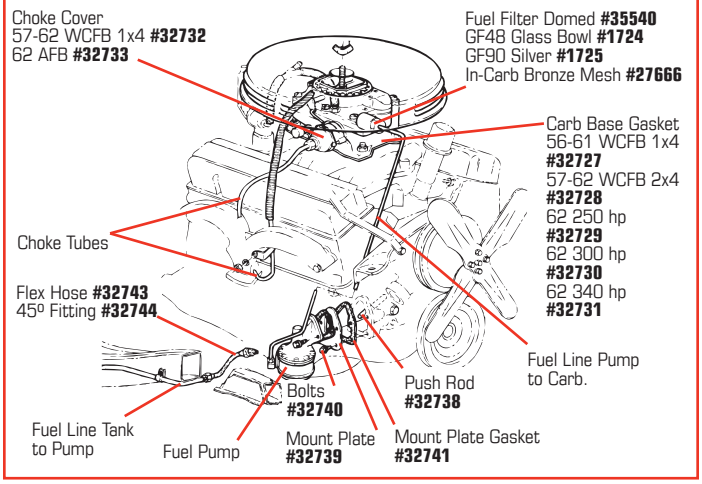

Fuel Supply

35520	55	Carburetor ID Tag - 2351S	$15.99
35525	57	Carburetor ID Tag - WCFB 4 BBL	$15.99
35526	57	Carburetor ID Tag - 2505S - 1x4	$8.99
33146	62	Carburetor Baffle Plate - 300 hp - Stainless Steel	$11.99
41202	57-61	Carb Fast Idle Assembly - WCFB	$71.99
35538	62	Carburetor Inlet Fitting - AFB - 3/4 Hex Brass	$10.99
33147	62	Carburetor Insulator Spacer - 300 hp	$31.99
K1250	56-62	Carburetor to Intake Mounting Stud w/ Nut Kit (exc. 62 300 hp)	$6.99
K1249	62	Carb to Intake Mounting Stud & Nut Kit - 300 & 340 hp	$6.99
41200	53-55	Carb Rebuild Kit - 6 Cyl	$42.99
27644	55-62	Carburetor Kit - WCFB 1x4 & 2x4	$40.99
27645	62	Carburetor Kit - AFB	$55.99
41195	53-55	Carburetor Spacer - 6 Cyl	$44.99
35535	56-61	Carburetor Vent Tube - Brass - 2x4 Front	$18.99
35536	56-61	Carburetor Vent Tube - Brass - 2x4 Rear	$18.99
33158	62	Choke Clean Air Tube	$43.99
35008	62	Choke Clean Air Tube Hose	$2.99
33160	62	Choke Clean Air Tube Stud to Manifold	$6.99
41205	55-61	Choke Cover w/ Spring - WCFB 55-56 1x4, 56-61 2x4	$40.99
32732	57-62	Choke Cover - WCFB 1x4	$61.99
32733	62	Choke Cover - AFB	$61.99
35003	55-62	Choke Cover Gasket - WCFB & AFB	$2.99
33153	59-62	Choke Cover Retainer w/ Screws - WCFB 1x4	$8.99
35001	55-62	Choke Cover Screws - WCFB & AFB - 3 pc set	$2.99
33154	57-62	Choke Disc-Internal w/ Retainer & Spring-WCFB	$70.99
K1380	59-62	Choke Housing Mounting Screws - WCFB - 3 pc	$1.99
35005	62	Choke Housing Mounting Screws - AFB - 3 pc	$2.99
35539	55-62	Choke Internal Spring WCFB 1x4	$21.99
35006	55-62	Choke Rod w/ Clips - WCFB	$9.99
35007	62	Choke Rod w/ Clips - AFB	$9.99
35002	59-62	Choke Slotted Plate - WCFB & AFB	$10.99
32734	56-61	Choke Tube - 2x4	$12.99
32736	59-62	Choke Tube - Bottom - WCFB - 230, 250 hp	$14.99
32735	57-58	Choke Tube - Top - WCFB - 220, 230 hp	$12.99
41192	57-58	FI Pump Drive Cable - Inner Only - 6 5/16" Long	$27.99
41194	58-62	FI Pump Drive Cable - Inner Only - 6 3/4" Long	$27.99
35540	53-58	Fuel Filter - Domed Cap	$40.99
51155	53-62	Fuel Filter - GF-48 Paper Filter	$5.99
1724	53-62	Fuel Filter - GF-48 Glass Bowl w/ Paper Filter	$41.99
1725	62	Fuel Filter - GF-90 Silver	$27.99
44206	62	Fuel Filter - GF-90 Silver w/ Red Letters	$70.99
27666	59-62	Fuel Filter in Carb - Bronze Mesh - 230 & 250 hp	$3.99
43734	58-62	Fuel Float Lever - FI - Brass	$15.99
35541	58-62	Fuel Line to Frame Clips - 4 pc set	$7.99
27591	56-62	Fuel Line Clip to Frame Bolts - 4 pc set	$3.99
41222	54	Fuel Line Flex Hose	$27.99
41223	55-56	Fuel Line Flex Hose - V8 5/16"	$27.99
32743	56-62	Fuel Line Flex Hose	$22.99
32744	57-62	Fuel Line Flex Hose 45° Fitting	$15.99
0908	61-62	Fuel Line Hose Kit	$34.99
8010	56	Fuel Line To Tank Meter Adapter	$5.99
39944	59-62	Fuel Pump - Replacement	$142.99
41216	55-62	Fuel Pump - Rebuilt Kit	$58.99
41210	54	Fuel Pump - Rebuilt #4132	$335.99
41211	55	Fuel Pump - Rebuilt #4150 55E	$182.99
41212	55-56	Fuel Pump - Rebuilt #4262 55L-56E	$182.99
41213	56-57	Fuel Pump - Rebuilt #4346 56L	$308.99
41214	58	Fuel Pump - Rebuilt #4445 58E	$308.99
41215	58-62	Fuel Pump - Rebuilt #4656 58L	$182.99
32742	56-62	Fuel Pump Bolts - pr	$3.99
33141	57-62	Fuel Pump Gasket	$2.99
32739	55-62	Fuel Pump Mount Plate	$9.99
32740	57-62	Fuel Pump Mount Plate Bolts - pr	$3.99
32741	57-62	Fuel Pump Mount Plate Gasket	$2.99
32738	55-62	Fuel Pump Push Rod	$14.99
41095	56	Brake/Gas Line Clip - Double 5/16	$5.99
41096	56-58	Brake/Gas Line Clip - Double 3/8	$6.99
41217	53-57	Gas Line Connector Fitting - Tank to Pump	$4.99
41219	57-61	Gas Line Connector Fitting - Tank to Pump	$4.99
49933	58-62	Gas Line Fitting - To Fuel Pump	$6.99
32727	56-61	Gasket - Carburetor to Intake - WCFB 1x4	$2.99
32728	57-62	Gasket - Carburetor to Intake - WCFB 2x4-2 req'd	$4.99
32729	62	Gasket - Carburetor to Base - 250 hp	$3.99
32730	62	Gasket - Carburetor to Base - 300 hp	$7.99
32731	62	Gasket - Carburetor to Base - 340 hp	$12.99
35537	59-62	Vacuum Advance Hollow Stud & Hose Kit - 230-300 hp	$9.99
41206	53-54	Vacuum Advance Line	$54.99
41207	53-54	Vacuum Line - Fuel Pump to Wiper Motor	$50.99
41208	53-54	Vacuum Line - Fuel Pump to Intake	$50.99
41196	53-57	Vacuum Fitting - Rear Carb	$11.99
41197	55-57	Vacuum Plug - Front Carb Slotted	$6.99
41198	58-62	Vacuum Plug - Front Carb Hex	$6.99
41199	58-61	Vacuum Fitting - Rear Carb & FI	$11.99

WARNING: Cancer and Reproductive Harm —
www.P65Warnings.ca.gov

STEEL - AS ORIGINAL - TANK TO PUMP

8115	53	All	$77.99
8117	54	All	$52.99
8119	55	All	$81.99
8137	56	5/16"	$52.99
8138	56-57	3/8"	$63.99
8186	58-60	All	$52.99
8187	61-62	All	$48.99
41218	57-61	Tank Line - Top - 61E	$27.99
25690	61-62	Tank Line - Top	$27.99

STEEL - AS ORIGINAL - PUMP TO CARBURETOR

8006	53	All	$57.99
8007	54	All	$20.99
8008	55-56	195, 210 hp	$39.99
8162	56-58	2x4	$71.99
0735	57-58	FI	$60.99
8160	57-58	220, 230 hp	$42.99
8009	59-61	FI	$48.99
8163	59-61	2x4	$42.99
8161	59-62	230, 250 hp	$24.99
0741	62	FI	$20.99
8164	62	300, 340 hp	$48.99

STAINLESS STEEL - TANK TO PUMP

9993	53	All	$75.99
9994	54	All	$75.99
9995	55	All	$99.99
9996	56	5/16"	$70.99
9997	56-57	3/8"	$70.99
9870	58-60	All	$72.99
9871	61-62	All	$75.99

STAINLESS STEEL - PUMP TO CARBURETOR

9600	53	All	$97.99
9604	54	All	$97.99
9605	55-56	195, 210 hp	$41.99
9827	56-58	2x4	$71.99
9625	57-58	FI	$60.99
9825	57-58	220, 230 hp	$43.99
9630	59-61	FI	$48.99
9828	59-61	2x4	$71.99
9826	59-62	230, 250 hp	$32.99
9631	62	FI	$48.99
9829	62	300, 340 hp	$49.99

Product photos, descriptions and diagrams at:

www.CorvetteAmerica.com

ACCELERATOR

27651	58-62	Accelerator Arm at Firewall	$20.99
35014	56-62	Accelerator Arm Bolt, Nut & Washer Kit	$2.99
27664	56-61	Accelerator Linkage Set - 2x4	$58.99
27648	58-62	Accelerator Pedal Pivot at Firewall	$18.99
27646	58-62	Accelerator Pedal Pivot Rod	$34.99
27649	58-62	Accelerator Pedal Pivot Rod & Swivel Assembly	$50.99
27647	56-62	Accelerator Pedal Rod Seal	$12.99
27650	58-62	Accelerator Pivot Nut Plate	$10.99
27654	55-60	Accelerator Spring, Return Spring - 1x4 Black	$12.99
27655	61-62	Accelerator Return Spring - 1x4 Green	$12.99
27656	62	Accelerator Return Spring - 340 hp	$7.99
27657	56-61	Accelerator Return Spring - 2x4 - Front	$10.99
27658	56-61	Accelerator Return Spring - 2x4 - Rear	$11.99
27653	56-61	Accelerator Return Spring Bracket - 1x4	$7.99
27659	57-61	Accelerator Return Spring Bracket - 2x4	$9.99
27661	62	Accelerator Return Spring Bracket - Exc 340 hp	$12.99
27660	62	Accelerator Return Spring Bracket 340 hp	$7.99
27662	55-62	Accelerator Rod, 1x4 (Correct Thread)	$15.99
31094	55-62	Accelerator Rod Bushings w/ Insert - pr	$6.99
31109	55-62	Accelerator Rod Bushing w/ Insert	$3.99
27663	56-62	Accelerator Rod Installation Kit	$7.99
31095	55-62	Accelerator Rod Swivel	$3.99
41203	53-54	Carburetor Linkage Kit - 2nd Design	$108.99
25562	55-62	Carburetor Linkage Bushing - 10 required	$2.99
25563	55-62	Carburetor Linkage Bushings - 10 pc	$26.99
41266	53-54	Gas Pedal	$28.99
32558	56-57	Gas Pedal	$30.99
0600	58-62	Gas Pedal	$16.99
0004	58-62	Gas Pedal Studs - pr	$5.99

1955-1962 ACCELERATOR & LINKAGE

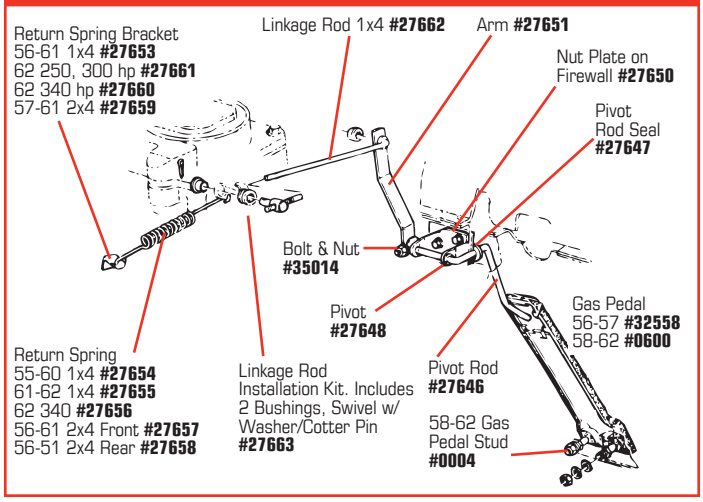

800-458-3475
CorvetteAmerica.com

WARNING: Cancer and Reproductive Harm — www.P65Warnings.ca.gov

Glove Box

Glove Box Components

28731	57-62	Deck Lid Open Push Button	$20.99
28732	56-62	Deck Lid Open Push Button Bezel	$20.99
46609	58-62	Glove Box Compartment Latch	$34.99
28755	56-62	Glove Box Lock w/ Case, Key & Retaining Nut	$53.99
35569	56-57	Glove Box Lock Catch - On Body	$15.99
35570	58-62	Glove Box Door Catch Screw	$10.99
28728	56-62	Glove Box Door Stop on Body - Rubber	$4.99
28606	56-62	Glove Box Door Molding - Upper LH	$34.99
28607	56-62	Glove Box Door Molding - Upper RH	$34.99
28608	56-62	Glove Box Door Molding - LH	$45.99
28609	56-62	Glove Box Door Molding - RH	$45.99
28711	56-62	Glove Box Door Molding - Retaining Clips & Screws - 4 pc	$12.99
28610	56-62	Glove Box Lower Molding - LH	$32.99
28611	56-62	Glove Box Lower Molding - RH	$32.99
28730	56-62	Glove Box Upper/Lower Molding Clip	$18.99
35571	56-62	Glove Box Upper/Lower - Molding Clip Screws - 24 pc	$6.99

1956-1962 GLOVE BOX

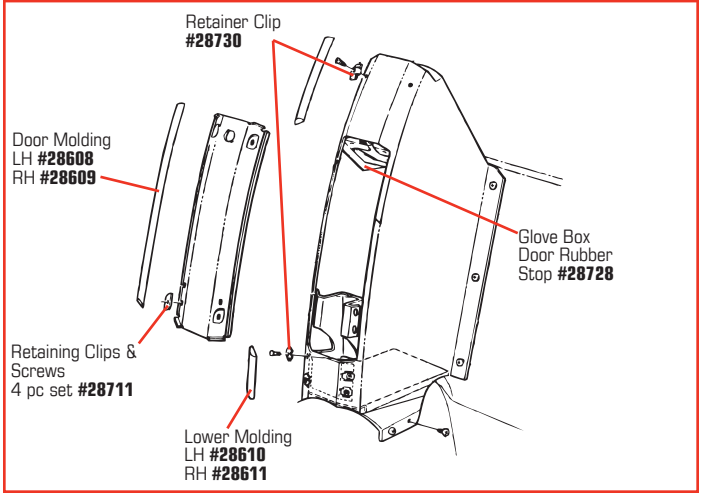

Grille

Grille Components

43567	62	Grille - Anodized Black	$854.99
41231	53-57	Grille Assembly - Complete - Includes Bar, Teeth, Studs, Backplate & Bar Mount Brackets	$611.99
41232	58-60	Grille Assembly - Complete - Includes Bar, Teeth, Studs, Backplate & Bar Mount Brackets	$407.99
1309	53-57	Grille Bar	$183.99
0631	58-60	Grille Bar	$121.99
0633	61-62	Grille Bar	$111.99
0632	58-60	Grille Bar End Brackets - pr	$19.99
K1230	58-60	Grille Bar to Bumper Nuts - 8 pc	$2.99
K1231	61-62	Grille Bar to Bumper Nuts - 4 pc	$1.99
1605	53-57	Grille Mount Brackets - 5 pc	$53.99
1302	53-57	Grille Oval	$1345.99
35572	53-57	Grille Oval Mount Retainer Plates - 10 pc	$35.99
1804	53-57	Grille Teeth - 13 pc set - w/ Mount Kit	$378.99
1805	58-60	Grille Teeth - 9 pc set - w/ Mount Kit	$299.99
0029	58-62	Grille Shell - Lower - LH	$79.99
0031	58-62	Grille Shell - Lower - RH	$79.99
0028	58-62	Grille Shell - Upper - LH	$79.99
0030	58-62	Grille Shell - Upper - RH	$79.99
9036	58-62	Grille Shell Lower Main	$693.99
9035	58-62	Grille Shell Upper Main	$671.99
K1210	58-62	Grille Shell Nut & Washer Kit - 84 pc	$8.99
1794	62	Grille Spacers - 8 pc set	$15.99
35573	53-57	Grille Tooth Mount Kit - 13 Backplates, 26 Studs	$58.99
35574	58-60	Grille Tooth Mount Kit - 9 Backplates, 18 Studs	$35.99
0934	53-60	Grille Tooth - Center - #424	$37.99
0935	53-60	Grille Tooth #425	$37.99
0936	53-60	Grille Tooth #427	$37.99
0937	53-60	Grille Tooth #428	$37.99
0938	53-57	Grille Tooth #429	$37.99
0629	53-60	Grille Tooth Bracket	$2.99
0630	53-60	Grille Tooth Stud	$1.99

WARNING: Cancer and Reproductive Harm — www.P65Warnings.ca.gov

Hardtop

Hardtop & Roof Panel Cart

This easy-to-use cart is the perfect way to store your Corvette's hardtop or roof panel when it's not in use. Sturdy aluminum construction and padded contact points offer stable and safe support, and the best part is you can roll it around the garage on four swivel casters. Some assembly required. Instructions included.

51000 Hardtop & Roof Panel Storage Cart $159.99

Premium Flannel Hardtop Covers

Our flannel hardtop cover protects the inside & outside of your hardtop like a security blanket during storage. Cover simply drapes over hardtop to provide protection and easy use.

26584 56-62 Premium Flannel Hardtop Cover $40.99

Hardtop Hoist Hand Winch

The Hoist Hand Winch, with its ratchet mechanism, 600 lb. capacity, and comfortable handle allows you to hoist your hardtop and manage the extra rope with ease.

X2585 Hardtop Hoist Hand Winch $18.99

Hardtop Hardware

K1276 56-62 Hardtop Anchor Jamb Nuts - pr $1.99
1864 56-58 Hardtop Screw Kit $24.99
27777 57-62 Hardtop Front Molding Retainer $96.99
0753 57-62 Hardtop Header Clip (Exterior) $19.99
27775 56-62 Hardtop Header Guide Pin - Front $11.99
28616 56-62 Hardtop Header Latch - LH $132.99
28615 56-62 Hardtop Header Latch - RH $132.99
28617 56-62 Hardtop Header Latch Backplates - pr $45.99
0118 56-62 Hardtop Hold-Down Bolts - Rear - pr $9.99
31110 56-62 Hardtop Hold-Down Bolt Gaskets - pr $1.99
1857 56-60 Hardtop Mount Kit - 6 pc $56.99
1858 61-62 Hardtop Mount Kit - 8 pc $74.99
0119 56-62 Hardtop Nut - Rear $4.99
0754 56-62 Hardtop Rear Clip (Interior) $6.99
41236 56-58 Hardtop Rear Window Lower Molding Retainer Strip $194.99
41239 59-60 Hardtop Rear Window Lower Molding Retainer Strip $263.99
41242 61-62 Hardtop Rear Window Lower Molding Retainer Strip - LH $144.99
41243 61-62 Hardtop Rear Window Lower Molding Retainer Strip - RH $144.99
27780 56-62 Hardtop Rear Window Outside 90-degree Molding $14.99
41234 56-58 Hardtop Rear Window Side Molding Retainer Strip - LH $36.99
41235 56-58 Hardtop Rear Window Side Molding Retainer Strip - RH $36.99
41237 59-60 Hardtop Rear Window Side Molding Retainer Strip - LH $36.99
41238 59-60 Hardtop Rear Window Side Molding Retainer Strip - RH $36.99
41240 61-62 Hardtop Rear Window Side Molding Retainer Strip - LH $36.99
41241 61-62 Hardtop Rear Window Side Molding Retainer Strip - RH $36.99
41233 56-62 Hardtop Rear Window Upper Molding Retainer Strip $105.99
41244 56-62 Hardtop Rear Window Retainer T-Bolt - 1/2" - 16 req'd $5.99
27778 56-58 Hardtop Rear Y Molding - LH $34.99
27779 56-58 Hardtop Rear Y Molding - RH $34.99
44678 56-60 Hardtop Rebuild Hardware Set - 85 pc* $51.99
1863 56-58 Hardtop Short Studs $3.99
1862 56-58 Hardtop Barrel Nuts $3.99
35578 61-62 Hardtop Rebuild Hardware Set - 85 pc * $51.99
*Includes All Necessary Rivets & Screws to Restore Your Hardtop. Does not include Barrel Nuts (#27787 - 18 required).
27787 56-62 Hardtop Rear Window Barrel Nuts - 6 pc $19.99
27617 56-57 Hardtop Receiver Moldings (57E) - pr $58.99
27618 57-58 Hardtop Receiver Moldings (57L) - pr $59.99
27619 59-60 Hardtop Receiver Moldings w/ Insert & Mount Kit - pr $254.99
27786 56-60 Hardtop Receiver Molding Mount Nuts - 2 pc $4.99
27620 59-60 Hardtop Receiver Rubber Inserts - pr $53.99
46830 58-60 Hardtop Receiver Mount Kit $7.99
20685 58-62 Hardtop Wrench $35.99

New products always added!
Corvette America.com

NEW

WARNING: Cancer and Reproductive Harm — www.P65Warnings.ca.gov

Hardtop Repair Kits

Make your original hardtop look new again with complete and accurate Hardtop Repair Kits for 1956-1962 Corvettes. When ordering: *Please supply either your V.I.N. or year and month of production; or ask an Account Representative to assist you with these numbers. Please indicate headliner color.

1956-1962 Hardtop Repair Kits contain:

1 Rear Window - Dated* • 2 Side Windows - Dated*
18 Stainless Steel Barrel Nuts • Rivet Kit and Screw Kit

Bottom Rear Molding Polycarbonate Retainers
(snap into stainless molding)

18 Specially Cut Stainless Steel Short Studs
(hold the Retainers and Rear Window in place)

40414 56-58 Hardtop Repair Kit $764.99
40415 59-60 Hardtop Repair Kit $764.99
40416 61-62 Hardtop Repair Kit $764.99
(Headliner not included with Hardtop Repair Kits)

1956-1960 HARDTOP RECEIVER MOLDINGS

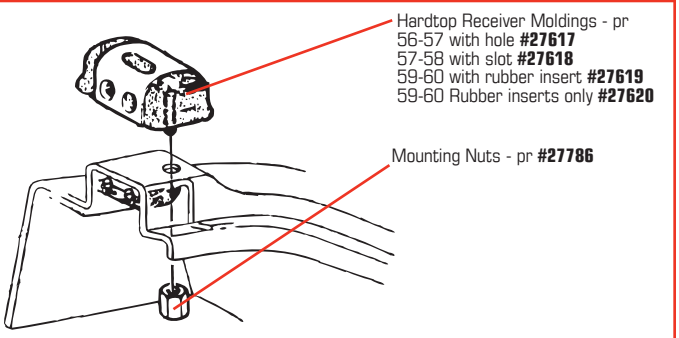

1956-1962 Hardtop Windows

Just like the originals, our 1956-62 Hardtop Rear Windows are made of clear plexiglass that, with today's cleaning products, will remain free of scratches for years. For 100% accuracy, we also offer Date Coding. There is an extra crating charge on all hardtop windows.

0890 56-60 Hardtop Rear Window - Dated $427.99
0891 61-62 Hardtop Rear Window - Dated $407.99
0795 56-60 Hardtop Rear Window $407.99
0796 61-62 Hardtop Rear Window $407.99
27787 56-62 Hardtop Rear Window Barrel Nuts - 6 pc $19.99
35577 56-62 Hardtop Rear Window Retainer T-Bolt - 16 req'd... $5.99
0757 56-60 Hardtop Side Windows - pr $86.99
48339 56-60 Hardtop Side Window - Dated $50.99
48340 61-62 Hardtop Side Window - Dated $40.99

Heater & AC

Heater & AC Components

4005 58-62 Air Conditioning Conversion System ** $1614.99
4008 58-62 Electric Fan Kit - Includes 2 Fans, Mounting Kit and Wire Harness $203.99

** Please Specify year of car, engine size, short (approx 5") or long (approx 7") water pump, driver or passenger side for compressor mounting. See part #4008 for Fan Kit.

28719 56-62 Cowl Vent Knob $19.99
28720 58-62 Cowl Vent Lever Link - Riveted to Door $69.99
35587 53-57 Cowl Vent & Mechanism Mount Kit - 32 pc $10.99
35588 58-62 Cowl Vent & Mechanism Mount Kit - 35 pc $10.99
35579 58 Heater Knobs - 3 pc - air, fan & temperature $68.99
35580 59-60 Heater Knobs - 3 pc - air, fan & temperature $68.99
35581 61-62 Heater Knobs - 3 pc - air, fan & temperature $80.99
41245 58-62 Heater Switch Spacer $6.99
27362 58-62 Core Support Extension - LH $70.99
27642 58-62 Core Support Extension - RH $70.99
27788 56-57 Defroster Box w/ Hose - Pressboard $288.99
27797 58-62 Defroster Box w/ Hose - Pressboard $209.99
41247 56-62 Defroster Box-Blower Housing Screw Set $3.99
0260 56-62 Defroster Hose - 2" - Cut to Length $37.99
32753 56-62 Defroster Hose Support Bracket on Defroster Box (not included w/ Box) $13.99
32750 53-57 Defroster Outlet Bezel - Chrome $19.99
27798 58-62 Defroster Outlet Bezel (Paint as required) $19.99
0255 56-62 Fresh Air Hose - 4" $55.99
32476 58-62 Fresh Air Hose Brackets - pr $16.99
27795 56-62 Fresh Air Hose Clamp - 2 req'd $9.99
28636 56-57 Fresh Air Inlet Screen $75.99
33186 56-62 Heater Blower Motor $121.99
0001 56-62 Heater Box Rebuild Kit $20.99
27791 56-62 Heater Box Studs w/ Nut Set $20.99
32755 58-62 Heater Cable Mount Kit - On Defroster Box $2.99
27799 58-62 Heater Control Valve $81.99
35582 56-57 Heater Control Valve - Correct $218.99
35583 56-57 Heater Control Valve Seal Kit $39.99
23041 58-62 Heater Control/Clock Panel $96.99
27800 58-62 Heater Control Valve to Core Hose $7.99
27789 56-62 Heater Core $203.99
K1304 56-62 Heater Core Mount Screws - 4 pc $4.99
41248 56-58 Heater Core Outlet 90° Elbow $15.99
32757 59-62 Heater Core Outlet 90° Elbow $15.99
0701 53-58 Heater Hose Set - 58E $47.99
40115 58-62 Heater Hoses - w/o Logo - 58L $28.99
40121 58-60 Heater Hoses - w/ GM Lettering $47.99
40122 61-62 Heater Hoses - w/ GM Lettering $49.99
0703 61-62 Heater Hose Set - w/o Logo $30.99
32758 58-62 Heater Hose Bracket on Generator $17.99
K1337 56-62 Heater Hose Clamps - Spring Ring - 5/8" - pr $1.99
K1421 56-62 Heater Hose Clamps - Spring Ring - 3/4" - pr $2.99
35362 Heater Hose Clamp Pliers - Spring Ring $30.99
27389 56-62 Heater Hose Fitting Adapter - National Pipe Thread - 1/2" - 3/8" $3.99
27390 61-62 Heater Hose Fitting Adapter - National Pipe Thread - 3/4" - 1/2" $6.99
27387 56-62 Heater Hose Fitting on Intake 3/8" $8.99
27388 59-62 Heater Hose Fitting on Intake 1/2" $7.99
32942 56-62 Heater Hose Grommet in Firewall $4.99

Continued on the next page.

WARNING: Cancer and Reproductive Harm — www.P65Warnings.ca.gov

Continued from the previous page.

41249	61-62	Heater Hose Tie Strap Kit - Aluminum - 10 pc	$21.99
32759	56-62	Heater Hose Y Bracket on Fender	$13.99
27838	53-57	Heater Switch Assembly w/ Cable	$213.99
27839	58-62	Heater Switch Assembly w/ Cable	$201.99
28635	56-62	Inlet Screen w/ Screws	$23.99
27385	56-58	Lower Water Pump Fitting - Curved 5/8"	$18.99
27386	59-62	Lower Water Pump Fitting - Curved 3/4"	$16.99
32752	56-62	Outer Heater Cover Adapter Plate	$34.99
27792	56-62	Outer Heater Cover w/ Flapper Door	$160.99
32751	56-62	Outer Heater Cover Flapper Door Repair Kit	$38.99
27384	61-62	Top Water Pump Fitting - 90 Degree	$21.99
27790	56-62	Underdash Heater Box (Fiberglass)	$150.99

1956-1962 HEATER

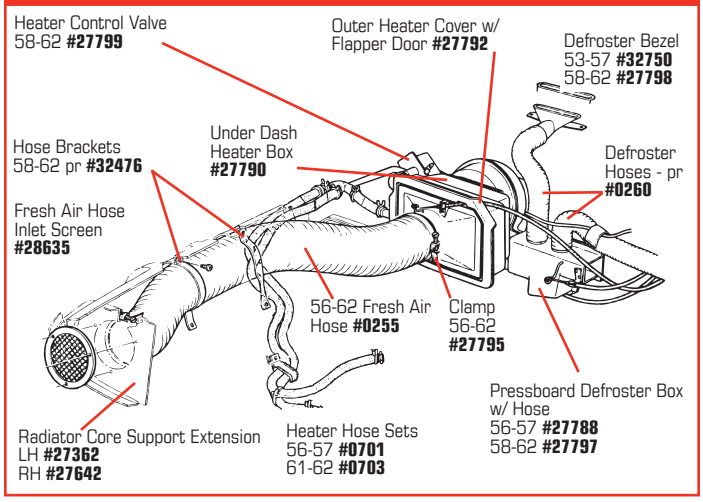

HOOD

HOOD COMPONENTS

32773	53-57	Female Hood Latch Assembly - LH	$96.99
32774	53-57	Female Hood Latch Assembly - RH	$96.99
27815	58-59	Female Hood Latch Assembly - LH or RH	$71.99
32775	53-57	Female Hood Latch Bolt Set - 8 pc	$21.99
32763	58-62	Female Hood Latch Bolt Set - 6 pc	$7.99
35589	53-57	Female Hood Latch Lever - LH	$35.99
35590	53-57	Female Hood Latch Lever - RH	$35.99
K1030	53-62	Hood Bumpers - Rubber	$2.99
35596	58-59	Female Hood Latch Lever	$24.99
35591	53-57	Female Hood Latch Repair Kit - Spring, Pin & Clip - repairs one lock	$11.99
35597	58-59	Female Hood Latch Repair Kit - Spring, Pin & Clip - repairs one lock	$11.99
32765	60-62	Female Hood Latch Tension Spring	$3.99
35593	53-59	Hood Bumper Screw, Nut & Washer Set	$5.99
35068	60-62	Hood Bumper Screw, Nut & Washer Set	$1.99
32761	58-59	Hood Cable Support w/ Clamp & Screw - Near Female Latch - LH	$18.99
32762	58-59	Hood Cable Support w/ Clamp & Screw - Near Female Latch - RH	$18.99
27818	59-60	Hood Front Rubber Seal (Air Dam)	$30.99
32770	53-57	Hood Hinges - pr	$347.99
3882	58-62	Hood Hinge, LH	$28.99
0126	58-62	Hood Hinge, RH	$28.99
32771	53-57	Hood Hinge to Hood Bolts - 4 pc set	$6.99
27820	58-62	Hood Hinge Bolt Set - 10 pc	$26.99
35598	58	Hood Latch Cable Support Brackets - 58 E - pr	$119.99
30541	60-62	Hood Lock Assembly Kit	$159.99
32772	53-57	Hood Pop-Ups - pr	$88.99
K1431	53-57	Hood Pop-Up Bolt Set - 8 pc	$2.99
23023	56-57	Hood Release Cable Assembly w/ Bracket	$145.99
3883	58-62	Hood Release Cable Assembly	$88.99
23024	53-57	Hood Release Cable Retainers - 4 pc set	$18.99
K1404	58-62	Hood Release Cable Assembly Retaining Nut w/ Washer	$2.99
0046	58-62	Hood Release Cable Grommet	$5.99
32766	58-62	Hood Release Cable Grommets - pr	$9.99
40572	53-62	Hood Release Cable Guide Screws - pr	$0.99
32767	53-62	Hood Release Cable Stop - Brass w/ Screw	$3.99
41252	58-59	Hood Release Cable-Latch Retainer w/ Screw Set - 4 pc	$14.99
35599	60-62	Hood Release Cable to Latch Retainers w/ Screws - 8 pc set	$14.99
K1030	53-62	Hood Rubber Bumpers - pr	$2.99
32777	56-57	Hood Stabilizer Blocks w/ Screws - pr	$23.99
32769	53-57	Hood Support	$80.99
35601	58	Hood Support - RH Mount - 58 E	$77.99
0133	58-62	Hood Support	$63.99
41250	53-57	Hood Support Bolt Kit - 8 pc	$4.99
32768	58-62	Hood Support Bolt Kit - 8 pc	$5.99
35602	53-62	Hood Support Pin - prevents accidental closing	$10.99
27819	60-62	Hood Support Reinforcement	$38.99
32776	53-57	Male Hood Lock	$45.99
51201	58-59	Male Hood Lock Pin	$15.99
27814	58-59	Male Hood Lock Assembly	$73.99
27817	60-62	Male Hood Lock Assembly w/ Plate - each	$73.99
28424	60-62	Male Hood Lock Assemblies - w/o Plate - pr	$55.99
32763	53-58	Male Hood Lock Bolt Set - 6 pc	$7.99
25778	59-62	Male Hood Lock Bolts - 6 pc	$17.99
35592	53-57	Male Hood Lock - Pin Only	$15.99
3888	60-62	Male Hood Lock - Pin Only	$15.99
35594	53-57	Male Hood Lock/Pop-up - Spring Only	$16.99
32764	60-62	Male Hood Lock Spring	$5.99
35071	60-62	Male Hood Lock Spring Retainer	$4.99
3889	60-62	Male Hood Lock Spring Seat	$9.99

#32769

1953-1962 HOOD

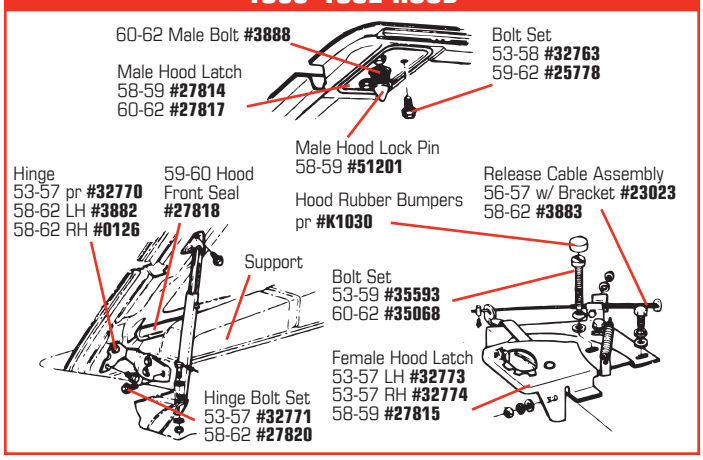

800-458-3475
CorvetteAmerica.com
WARNING: Cancer and Reproductive Harm — www.P65Warnings.ca.gov

Lamps, Lights & Lenses

#0156

#0162

#22532

Headlights

K1031	56-62	Headlight Adjuster w/ Screw	$3.99
K1240	56-62	Headlight Adjuster Screws - 8 pc set	$7.99
K1186	58-62	Headlight Adjuster & Mount Kit - 4 Adjusters & 2 Springs	$22.99
46847	56-57	Headlight Bucket	$116.99
32779	53-57	Headlight Bucket to Body Gaskets - pr	$8.99
32782	56-62	Headlight Bucket to Body J-Nut & Clutch Head Screw Kit - 29 pc	$35.99
35633	58-62	Headlight Bucket w/ Springs & Adjusters	$132.99
35630	53-57	Headlight Bucket Wiring Harness Grommet	$9.99
35468	58-62	Headlight Bucket Wiring Harness Grommet	$5.99
29516	58-62	Headlight Bulb Retaining Cup - Outer LH	$21.99
29517	58-62	Headlight Bulb Retaining Cup - Outer RH	$21.99
29518	58-62	Headlight Bulb Retaining Cup - Inner LH	$21.99
29519	58-62	Headlight Bulb Retaining Cup - Inner RH	$21.99
32780	56-57	Headlight Bulb Retaining Ring	$14.99
X2073	58-62	Headlight Bulb Retaining Ring	$9.99
K1047	58-62	Headlight Bulb Retaining Ring Screws - 6 pc set	$2.99
22532	60-62	Headlight Bulbs - T3 - set of 4	$126.99
32784	56-62	Headlight Capsule Tension Springs - Offset - pr	$5.99
X2236	58-62	Headlight Capsule Tension Spring - Straight	$1.99
0162	58-60	Headlight Ring - Chromed - pr	$157.99
0156	61-62	Headlight Ring - Unpainted	$75.99
32781	56-57	Headlight Ring Bracket Mount Kit	$45.99
32783	58-62	Headlight Ring Bracket Mount Kit	$38.99
25582	61-62	Headlight Ring Extensions - pr	$46.99
27616	56-57	Headlight Ring Gaskets - pr	$11.99
K1281	56-57	Headlight Ring Screws & J-Nuts - 12 pc set	$3.99
K1196	58-62	Headlight Ring Screws - 8 pc set	$3.99
K1510	58-62	Headlight Sealed Beam Retaining Ring Screws	$4.99
41259	53-55	Headlight Screens - pr	$222.99
35631	58-62	Headlight Wiring Harness Retaining Clips on Inner Fender - 4 pc set	$18.99

1958-1962 HEADLIGHT

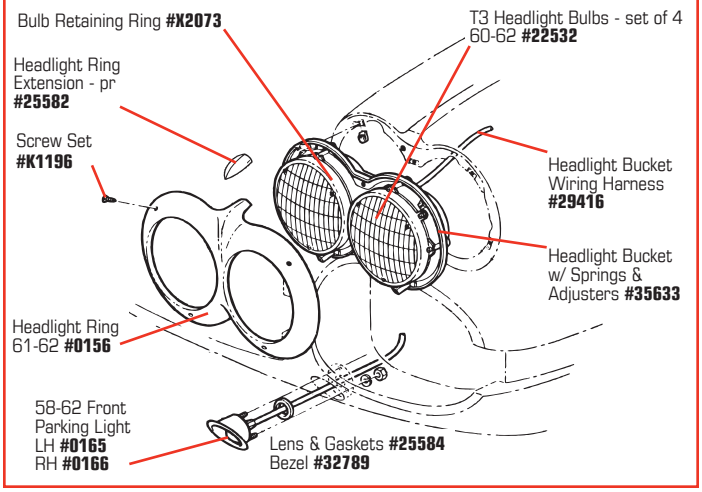

Parking Lights

32785	53-57	Park Lamp Housing U-Bracket	$17.99
25584	53-62	Park Lamp Lens with Gasket	$20.99
32786	53-57	Park Lamp Lens Bezel	$12.99
0856	53-57	Park Lamp Lens Bezel Barrel Nut	$12.99
35636	53-62	Park Lamp Lens Gaskets - pr	$3.99
0165	58-62	Park Light - LH	$112.99
0166	58-62	Park Light - RH	$112.99
41264	53-54	Park Light Sockets - w/ Wire - pr	$123.99
30023	58-62	Parking Brake Light Switch	$75.99
35637	58-62	Parking Lamp-to-Body Gaskets - pr	$3.99
25584	58-62	Parking Lamp Lens w/ Gasket	$20.99
32789	58-62	Parking Lamp Lens Bezel	$14.99
35636	53-62	Parking Lamp Lens Gaskets - pr	$3.99
K1260	58-62	Parking Lamp Lens Screws - 8 pc set	$4.99
35638	58-62	Parking Lamp Sockets w/ Wire - pr	$57.99
51296	53-55	Parking Light / Turn Signal Assembly	$268.99
51297	55-57	Parking Light / Turn Signal Assembly	$269.99
34743	53-57	Parking Light Body Gasket	$1.99
46846	53-62	Parking Light Gasket	$1.99

LED Lights

41439	58-60	LED Bulb - 2 High Power 1157 - White	$19.99
46844	53-62	LED Parking Light Lens - Amber	$32.99
46845	53-62	LED Parking Light Lens - Clear	$32.99
45000	56-57	LED Taillight - Red - 2 Required	$31.99
45061	61-62	LED Flasher - 2 Terminal	$9.99

1956-1957 HEADLIGHT & PARKING LAMP

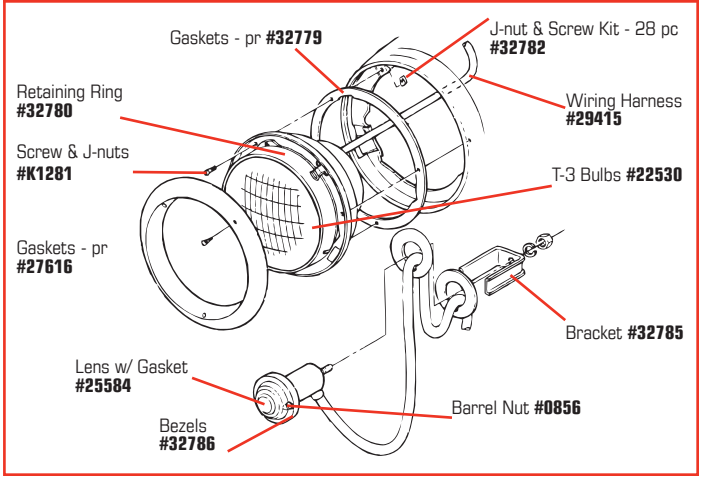

#27439

#27436

COURTESY LIGHTS

27439	58-62	Courtesy Light	$51.99
27436	53-57	Courtesy Light Assemblies - pr	$115.99
27442	58-62	Courtesy Light Assembly w/ Socket & Wire	$60.99
27437	53-57	Courtesy Light Bezels w/ Lenses - pr	$82.99
41257	55-62	Courtesy Light Bulb	$1.99
25581	58-62	Courtesy Light Lens	$11.99
27438	56-57	Courtesy Light Lenses - pr	$10.99
41258	58-62	Courtesy Light Mount Screws/Nuts	$2.99
27441	58-62	Courtesy Light Socket w/ Wire	$19.99

#0617

#27304

LICENSE LIGHTS

27304	56-57	License Lamp Assemblies w/ Fasteners - pr	$116.99
27314	58-60	License Lamp Assemblies w/ Fasteners - pr	$116.99
35646	61-62	License Light to Body Gasket	$6.99
35645	58-60	License Light to Bumper Nut Plates - pr	$34.99
25583	61-62	License Light Assembly	$111.99
0616	56-60	License Light Backplate	$8.99
35647	61-62	License Light Bulb	$1.99
K1368	56-60	License Light Housing Screws - 4 pc	$2.99
0617	56-60	License Light Lens	$11.99
0163	61-62	License Light Lens - Rear	$20.99
28752	56-60	License Light Lens Gaskets - pr	$3.99
34749	61-62	License Light Lens Gasket	$4.99
34750	61-62	License Light Lens Screws - 4 pc	$3.99
K1258	61-62	License Light Mount Screws, Washers & Nuts - 12 pc	$2.99

#25585

#0170

REAR REFLECTORS

25585	58-60	Rear Reflector Kit - includes 2 Reflectors, 2 Bezels & Mounting Kit	$87.99
28620	58-60	Rear Reflector - Red	$23.99
0170	58-60	Rear Reflector Bezel - Chrome	$24.99

#26800

#48719

#45001

#0174

TAILLIGHTS

21152	56-57	Taillights	$566.99
21154	58-60	Taillights	$579.99
35642	56-60	Taillight to Body Gaskets - pr	$3.99
34745	61-62	Taillight to Body Gaskets - 4 pc	$7.99
48717	61-62	Taillight Assembly - Inner LH	$91.99
48718	61-62	Taillight Assembly - Inner RH	$91.99
48715	61-62	Taillight Assembly - Outer LH	$91.99
48716	61-62	Taillight Assembly - Outer RH	$91.99
48719	61-62	Taillight Assemblies - 4 pc	$356.99
26800	61-62	Taillight Assemblies - Inner LH & RH - pr	$177.99
26801	61-62	Taillight Assemblies - Outer LH & RH - pr	$177.99
33923	56-62	Taillight Bulb - High Output	$2.99
35641	56-57	Taillight Housing Screws - 2 pc	$4.99
0176	58-60	Taillight Inner Lens - Clear Round	$13.99
34742	58-60	Taillight Inner Lens Drain Wicks - 4 pc	$5.99
32788	56-57	Taillight Lens	$24.99
0175	61-62	Taillight Lens - Red	$10.99
0172	56-57	Taillight Lens Gasket	$3.99
35639	56-57	Taillight Lens Gaskets - pr	$5.99
0177	58-62	Taillight Lens Gasket - 58-60 Inner	$1.99
K1373	56-60	Taillight Lens Screws - 58-60 Inner - 4 pc	$2.99
K1260	61-62	Taillight Lens Screws - 8 pc	$4.99
0174	58-60	Taillight Outer Lens - Red Long - 2 req'd	$51.99
0783	58-60	Taillight Outer Lens Gaskets - pr	$5.99
K1375	58-60	Taillight Outer Lens Screws w/ Washers Red Lens - 16 pc set	$5.99
0779	61-62	Taillight Protector Cones - Gray - 4 pc	$40.99
K1021	61-62	Taillight Speednuts - 8 pc	$2.99

LED TAILLIGHTS

45001	61-62	LED Taillight - ea	$31.99
45063	61-62	Polarity Reverser	$0.99

WARNING: Cancer and Reproductive Harm — www.P65Warnings.ca.gov

Locks

Locks & Components

32791	56-59	Lock Set - Ignition, Doors, Trunk & Glove Box	$144.99
32792	60	Lock Set - Ignition, Doors, Trunk & Glove Box	$126.99
32793	61-62	Lock Set - Ignition, Doors, Trunk & Glove Box	$121.99
35648	56-60	Lock Set - Ignition & Doors	$60.99
35649	61-62	Lock Set - Ignition & Doors	$58.99
23810	56-58	Door Locks - pr	$40.99
23811	59-62	Door Locks - pr	$39.99
28759	56-62	Door Lock Bezel	$9.99
27504	56-62	Door Lock Cylinder Rod w/ Clip	$11.99
0713	56-62	Door Lock Gasket	$2.99
32794	56-62	Door Lock Pawl	$4.99
32795	56-62	Door Lock Pawl Retainer Clips - pr	$1.99
28758	56-62	Door Lock Retainer	$10.99
28755	56-62	Glove Box Lock w/ Case, Key & Retainer Nut	$53.99
23800	53-62	Ignition Lock	$16.99
32796	56-62	Key Blank - Hex Head	$3.99
32797	56-62	Key Blank - Round Head	$2.99
23838	53-58	Trunk Lock	$21.99
23839	59-62	Trunk Lock	$20.99
28760	56-60	Trunk Lock Assembly Cover	$26.99
0200	56-62	Trunk Lock Escutcheon	$9.99
0739	53-62	Trunk Lock Gasket	$1.99
28762	56-62	Trunk Lock Retainer - Correct	$11.99
28756	53-60	Trunk Lock Rod	$8.99
28757	61-62	Trunk Lock Rod	$8.99

Mirrors

Restored Mirrors

23770	56	Inside Rearview Mirror	$148.99
23771	57	Inside Rearview Mirror	$96.99

1956-1962 MIRRORS

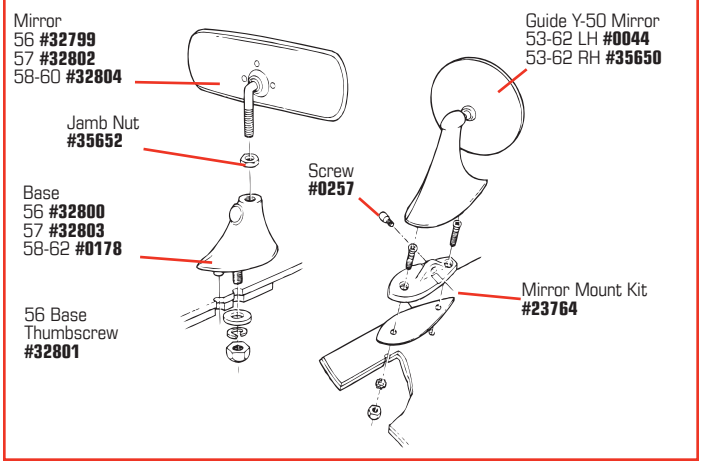

Replacement Mirrors

0851	58-62	Inside Rearview Mirror - Replacement	$55.99

Reproduction Mirrors

32799	56	Inside Rearview Mirror	$67.99
32802	57	Inside Rearview Mirror	$70.99
32804	58-60	Inside Rearview Mirror	$42.99
0184	61-62	Inside Rearview Mirror	$50.99
0044	53-62	Outside Mirror - LH Door - Guide Y-50	$124.99
35650	53-62	Outside Mirror - RH Door - Guide Y-50	$124.99

Mirror Hardware

32800	56	Inside Rearview Mirror Base	$53.99
32803	57	Inside Rearview Mirror Base	$53.99
0178	58-62	Inside Rearview Mirror Base	$50.99
32801	56	Inside Rearview Mirror Base Thumbscrew	$16.99
35652	57-62	Inside Rearview Mirror Jamb Nut	$1.99
35651	53-62	Outside Mirror Base Gasket	$1.99
K1252	53-62	Outside Mirror Bracket-to-Door Screws/Nuts Set	$1.99
0257	53-62	Outside Mirror-to-Bracket Screw	$1.99

Pedals & Pads

Pedals & Pads

41266	53-54	Gas Pedal	$28.99
32558	56-57	Gas Pedal	$30.99
0600	58-62	Gas Pedal	$16.99
0004	58-62	Gas Pedal Studs - pr	$5.99
35654	55-57	Pedal Pad - Brake - Auto Trans	$18.99
0011	55-57	Pedal Pad - Brake/Clutch	$10.99
0870	58-62	Pedal Pad - Brake/Clutch	$8.99

RADIO & SPEAKER

32812	58	Indicator Backplates - pr	$48.99
32813	59-60	Indicator Backplates - pr	$17.99
35663	61-62	Indicator Backplate & Bezel Set	$55.99
25587	59-60	Radio Bezel Set - Volume, Selector & Spacers	$38.99
35658	56-61	Radio Ground Straps - 8 pc set	$24.99
35659	62	Radio Ground Straps - 8 pc set	$24.99
32426	58-62	Radio Ground Wire to Valve Cover	$13.99
27328	53-62	Radio Ground Wire Grommets - 9 pc	$20.99
51290	58-62	Radio Power Lead	$13.99
27345	58-62	Radio/Heater Console - Fiberglass	$244.99
25589	56-57	Radio Indicators Vol/Sel w/ Bezels - 4 pc	$33.99
25588	56-57	Radio Indicators Volume/Select - pr	$26.99
28764	58	Radio Knob - 1 req'd - 58 Early	$21.99
28765	58-60	Radio Knob - 1 req'd - 59-60, 2 req'd - 58 Late	$23.99
32814	58	Radio Knob & Backplate Set	$95.99
32815	59-60	Radio Knob & Backplate Set	$98.99
32816	61-62	Radio Knob & Backplate Set	$90.99
28769	59-60	Radio Knob Chrome Bezel	$12.99
28770	56-62	Radio Knob Felt Washers - pr	$2.99
32451	53-54	Radio Power Lead	$21.99
32452	55-57	Radio Power Lead	$21.99
28768	56-62	Radio Stem Nuts - pr	$2.99
35660	53-57	Radio Support Bracket	$14.99
28763	58-62	Radio Support Bracket	$15.99
1820	59-62	Speaker Bezel - Paint to Match	$44.99
K1530	59-62	Speaker Bezel Speednuts - 4 pc	$1.99
1610	58-62	Speaker & Transformer Unit	$69.99
49805	58-59	Speaker Mount Stud with Nut	$16.99
32809	53-57	Speaker Grille - 3 pc	$77.99
1114	58-59	Speaker Grille	$45.99
1115	60-62	Speaker Grille	$24.99
32808	53-57	Speaker Grille Bezel	$95.99
28766	58	Tone Adjust Knob	$7.99
28767	59-60	Tone Knob & Volume Spacers - pr	$16.99
32805	58-60	Wonderbar Radio Face Kit - Black	$197.99
32806	58-60	Wonderbar Radio Face Kit - White	$197.99
32807	61-62	Wonderbar Radio Face Kit - White	$197.99
20130	53	Wonderbar Radio Lens	$47.99
20131	54-55	Wonderbar Radio Lens	$47.99
20132	56-57	Wonderbar Radio Lens	$34.99
20133	58-62	Wonderbar Radio Lens	$34.99

ANTENNA

25316	56-58	Antenna Assembly - 58E	$122.99
25319	58-60	Antenna Assembly - 58L	$122.99
25317	61-62	Antenna Assembly	$122.99
35655	56-62	Antenna Cable w/ Correct Nut	$27.99
27234	56-62	Antenna Ground Strap	$8.99
41267	61-62	Antenna Lower Tube - w/ Lockwasher	$16.99
27225	56-60	Antenna Metal Inner Nut	$2.99
27227	56-60	Antenna Mounting Gasket	$1.99
27231	61-62	Antenna Mounting Gasket	$3.99
25586	56-60	Antenna Mounting Spacer	$6.99
27230	61-62	Antenna Mounting Spacer	$8.99
0895	61-62	Antenna Nut - Chrome	$11.99
27229	56-62	Antenna Support Bracket - Lower	$8.99
41268	56-62	Antenna Support Bracket Clamp, Bolt & Nut Set	$7.99
27228	56-60	Antenna Underbody Mounting Spacer	$15.99
27232	61-62	Antenna Underbody Mounting Spacer	$15.99
35656	56-62	Bracket - Rear Wiring/Antenna Cable - Long	$6.99
35657	56-62	Bracket - Rear Wiring/Antenna Cable - Short	$6.99
37305	58-62	Harness - Plug to Speaker	$6.99
37304	58-62	Harness - Radio to Plug	$6.99

Product photos, descriptions and diagrams at:

www.CorvetteAmerica.com

1953-1962 RADIO & SPEAKER

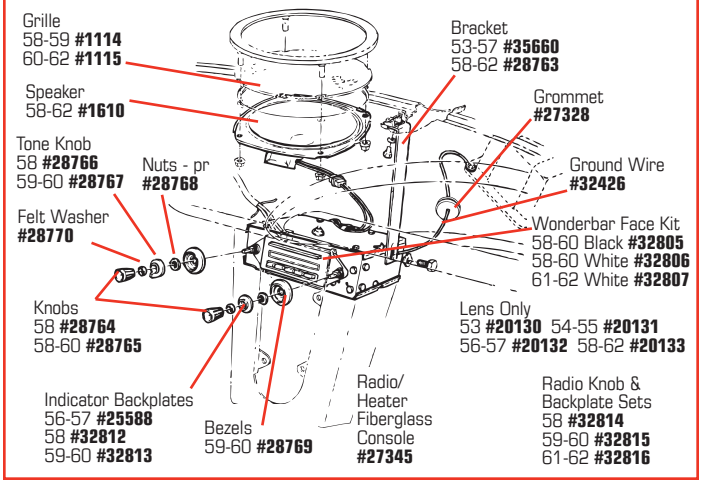

1956-1962 ANTENNA

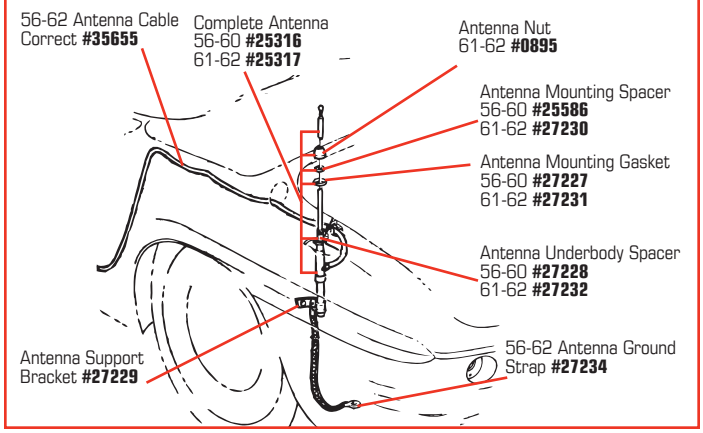

1953-1957 SPEAKER GRILLE

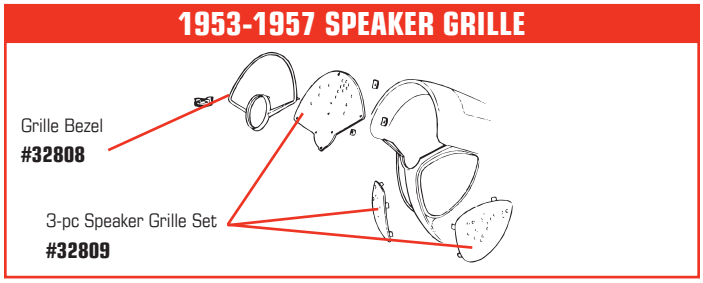

800-458-3475
CorvetteAmerica.com

WARNING: Cancer and Reproductive Harm —
www.P65Warnings.ca.gov

Kick Panel Speakers

Get more sound quality without cutting or drilling your classic Vette. Custom Autosound's Black ABS Kick Panel Speakers replace your originals without modifications and can be dyed to match your interior.

43388 58-62 Kick Panel Speakers
80 Watt 6.5" Round 2-way - pr **$142.99**

#26336 *#26338*

Front Speakers - 80-Watt Capacity

Custom Autosound's front speakers are an excellent replacement for the original in-dash speakers. They handle up to 80 watts and fit directly under the dash. Each assembly includes two speakers, correct mounting brackets and wiring. Note: Will not work with stock radios.

26336 58-62 Custom Autosound Front Speakers w/o AC..... **$40.99**
26337 58-62 Custom Autosound Front Speakers w/ AC..... **$40.99**
42819 58-62 Custom Autosound Speaker - Dual Voice Coil **$70.99**

#26338 *#26339*

Kenwood Front Speakers - 20 Watt

Kenwood quality replacement / upgrade for your original in-dash speakers. They handle up to 20 watts & fit directly under the dash. Each assembly includes two speakers, correct mounting brackets & wiring.

26338 58-62 Kenwood Front Speakers - Dual w/o AC..... **$81.99**
26339 58-62 Kenwood Front Speakers - Dual
w/ Dual Voice Coil w/o AC **$86.99**
26340 58-62 Kenwood Front Speakers - Dual w/ AC..... **$81.99**

- Direct Replacement - No Modification
- 5 Push Button
- CD Changer Compatible w/ CD Changer Control
- Rear USB Port
- 2 Channel AUX Input
- Does not Include Cassette Player

AM/FM 300 Watt Stereos

37940 55-57 Stereo - AM/FM 300 Watt **$305.99**
37941 58-62 Stereo - AM/FM 300 Watt **$305.99**
37944 55-62 Bluetooth Interface..... **$121.99**

- 1 Year Warranty
- Clock
- Green Backlight
- Seek and Scan Tuning
- Auto Antenna Lead
- 16 Presets - 4 AM & 12 FM
- Separate Bass & Treble Controls
- Four-Way Fader
- Auxilary Input for direct connection to today's audio devices!

200-Watt Custom Fit Stereos

46361 53-57 Stereo - Custom Fit - 200W **$305.99**
46362 58-62 Stereo - Custom Fit - 200W **$305.99**

AM/FM 200 Watt Stereos

This new stereo has the same cosmetics as the 300 Watt stereos above, but without USB/MP3 or CD changer control. An awesome looking radio at a great price. Radio has no cassette but comes with auxiliary audio input. If you have a portable MP3 player or Satellite radio just plug it into the Aux input and listen to it through this radio.

52055 53-57 Stereo - AM/FM 200 Watt **$203.99**
52056 58-62 Stereo - AM/FM 200 Watt **$203.99**

WARNING: Cancer and Reproductive Harm — www.P65Warnings.ca.gov

- 10 Presets (5 AM / 5 FM)
- 4x45 watt RMS for 180 watts
- Wonderbar Function Duplicates Original Seeking Function
- CD or XM Inputs
- Analog Look and Feel

WONDERBAR AM/FM STEREOS

45040 56-57 Radio AM/FM Wonderbar Stereo.....$809.99
45037 58 Radio AM/FM Wonderbar Stereo.....$759.99
45038 59-60 Radio AM/FM Wonderbar Stereo.....$759.99
45039 61-62 Radio AM/FM Wonderbar Stereo.....$759.99

SECRETAUDIO - SS

The SST is a 200 Watt AM/FM CD controller with USB MP3/WMA Flash Drive, IPod control, CD control and Satellite Radio Control; Featuring "RF" (radio frequency) remote control, ideal for Street Rods and Classics. The SST hideaway radio is designed to provide a classic car with exceptional audio quality while leaving the dash and original radio visible in the dash. The SST receiver / amplifier unit is usually hidden underneath the driver's seat or behind the dashboard and integrates with the vehicle's speaker system; if the speakers are for a mono radio they should be replaced with Custom Autosound DVC speakers or DUAL speakers. The SST has built in Bluetooth which allows you to stream music from your compatible device. The SST comes with a 10 foot cable connected to a small Bluetooth digital display that mounts flush to the dash or with a bracket, which is included for mounting options. It is controlled by a wireless remote from up to 30 feet away.

43378 53-62 SecretAudio - SS $285.99

BLUETOOTH INTERFACE

37944 55-62 Bluetooth Interface.....$121.99

#20836

SHIFTERS & LINKAGE

20813 56 Shifter - Automatic.....$345.99
20814 57-61 Shifter - Automatic.....$343.99
20815 62 Shifter - Automatic.....$305.99
20800 56 Shifter - 3 Speed $384.99
20801 57-58 Shifter - 3 Speed $315.99
20802 59-62 Shifter - 3 Speed $392.99
20805 57-58 Shifter - 4 Speed $397.99
20806 59-62 Shifter - 4 Speed $458.99
20830 56-62 Shifter Linkage - 3 Speed..... $97.99
20835 57-62 Shifter Linkage - 4 Speed - Borg-Warner.....$146.99
20836 57-62 Shifter Linkage - 4 Speed - Muncie.....$152.99

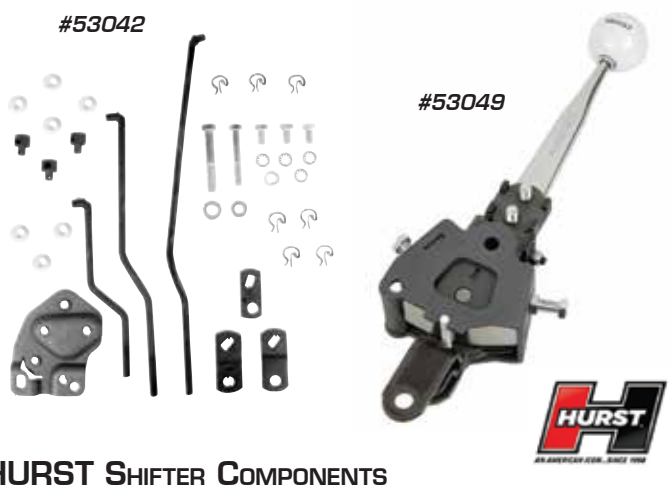

HURST SHIFTER COMPONENTS

53042 57-62 Shifter Linkage - Hurst - 4 Speed - Borg Warner T-10 Trans ID 410.....$219.99
53049 63-67 Shifter - Manual Shifter - Hurst Super Street - 410 Borg Warner T-10 Manual Transmission $409.99

WARNING: Cancer and Reproductive Harm — www.P65Warnings.ca.gov

#0047

#0048

#43508

#23029

#27342

#27343

#0052

#33263

#23036

#28771

#0794

Shifter & Console Components

23035	53-60	Ash Tray - 60 Early - Small Snuffer - w/o Holder	$43.99
23036	60-62	Ash Tray - 60 Late - Large Snuffer - w/ Holder	$43.99
35367	56-62	Ashtray Knob	$14.99
0047	56-62	Console Plate - except 59-62 4 Speed	$36.99
0048	59-62	Console Plate - 4 Speed only	$36.99
27342	56-57	Indicator Plate - Auto	$17.99
0661	58-61	Indicator Plate - Auto	$17.99
27343	62	Indicator Plate - Auto	$17.99
27341	56-62	Indicator Plate - 3 Speed	$17.99
0052	59-62	Indicator Plate - 4 Speed	$17.99
K1057	56-62	Indicator Plate Screws - 2 pc	$3.99
28771	59-62	Reverse Lockout Handle & Cable - 4 Speed	$82.99
35665	57-62	Shifter Adjustment Gauge Block - 4 Speed	$8.99
32811	57-62	Shifter Anti-Rattle Spring Bracket 4 Speed	$10.99
32817	59-62	Shifter Anti-Rattle Spring	$7.99
0045	55-62	Shifter Boot - except 59-62 4 Speed	$23.99
23029	59-62	Shifter Boot - 4 Speed	$20.99
20812	56-62	Shifter Bushing Set - Manual Hurst - 6 pc	$10.99
K1058	56-62	Shifter Console Screws - 2 pc	$1.99
41269	56-58	Shifter Handle - Manual Hurst	$85.99
41270	59-62	Shifter Handle - Manual Hurst	$136.99
35667	57-58	Shifter Handle - 4 Speed - Stock	$137.99
35668	59-62	Shifter Handle - 4 Speed - Stock	$218.99
35669	59-62	Shifter Handle Cover - 4 Speed	$60.99
33263	56-57	Shifter Knob - Chrome	$50.99
0794	56-62	Shifter Knob - White	$9.99
43508	58-62	Shifter Knob w/ 4 Speed Pattern	$9.99
K1453	56-62	Shifter Mount Bolts - 3 pc	$2.99
K1485	56-62	Shift Pattern Screws - 2 pc	$1.99

1956-1962 CONSOLE

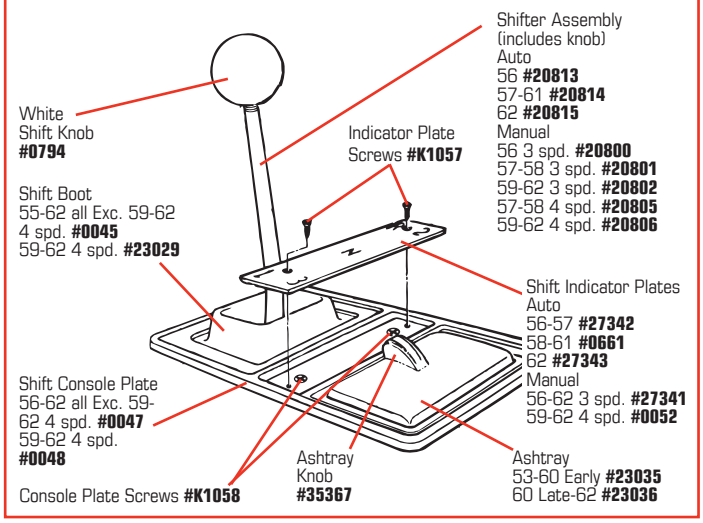

Look for our name on the box!

We provide many of our products to other Corvette parts suppliers.

WARNING: Cancer and Reproductive Harm — www.P65Warnings.ca.gov

Serving the Corvette Community Since 1977.

CLUTCH

28781	56-62	Clutch Cross Shaft - Correct	$77.99
28782	56-62	Clutch Cross Shaft Bracket w/ Pivot Stud	$23.99
41280	56-62	Clutch Cross Shaft Bracket to Bell Housing Bolt Set	$1.99
29965	56-62	Clutch Cross Shaft Felt Seal	$1.99
28791	55-62	Clutch Cross Shaft Frame Bracket w/ Stud	$36.99
28792	56-62	Clutch Cross Shaft Pivot Ball Stud (weld on)	$6.99
28790	56-62	Clutch Cross Shaft Seals w/ Leather Skin - pr	$10.99
28796	56-62	Clutch Fork	$95.99
28795	56-62	Clutch Fork Anti-Rattle Spring	$3.99
28869	56-67	Clutch Pedal Bumper - Correct	$3.99
28870	56-60	Clutch Fork Boot - Leather, Cast Bell Housing	$32.99
28871	60-62	Clutch Fork Boot - Rubber, Aluminum Bell Housing	$30.99
28797	56-62	Clutch Fork Pivot Pin	$1.99
28799	56-62	Clutch Fork Pivot Stud	$8.99
28794	56-62	Clutch Fork Push Rod Swivel	$9.99
29967	55-62	Clutch Fork Push Rod	$32.99
35690	55-62	Clutch Fork Spring - Rivets to Fork	$17.99
31177	56-62	Clutch Kit - 327 10" - 10 Spline	$189.99
28873	56-62	Clutch Pedal Bumper - Correct	$2.99
27292	56-62	Clutch/Brake Pedal Bushings - 4 pc set	$19.99
0011	55-57	Clutch Pedal Pad	$10.99
0870	58-62	Clutch Pedal Pad	$8.99
28876	59-62	Clutch Pedal Push Rod	$23.99
28874	56-58	Clutch Pedal Push Rod w/ Hardware	$30.99
41281	59-62	Clutch Pedal Push Rod Bracket Retaining Clip & Washer Set	$3.99
28875	59-62	Clutch Pedal Push Rod Bracket	$23.99
35691	59-62	Clutch Pedal Push Rod Bracket-to-Pedal Bolts - 4 pc set	$3.99
28776	55-62	Clutch Pedal Push Rod Firewall Seal	$5.99
28777	55-62	Clutch Pedal Push Rod Firewall Seal Retainer	$12.99
K1387	56-62	Clutch Pedal Push Rod Firewall Seal Retainer Screws - 2 pc set	$1.99
28779	56-62	Clutch Pedal Push Rod Shoulder Bolt Only	$12.99
28780	56-62	Clutch Pedal Push Rod Shoulder Bolt Bushing	$15.99
35688	55-62	Clutch Pilot Bearing - Roller Type	$13.99
35687	56-62	Clutch Pilot Bushing	$8.99
29847	56-62	Clutch Release Throw Out Bearing	$24.99
28786	56-57	Clutch Return Spring	$23.99
28787	58-62	Clutch Return Spring	$16.99
28785	58-62	Clutch Return Spring Bracket	$6.99
28783	56-57	Clutch Return Spring Bracket on Cross Shaft	$15.99
28784	58-62	Clutch Return Spring Bracket on Cross Shaft	$21.99
K1405	55-62	Clutch Return Spring Bracket to Cross Shaft Bolts - 6 pc set	$2.99
28789	56-62	Clutch Return Spring Bracket (welds to Frame)	$20.99
28788	56-62	Clutch Return Spring Hairpin Hook (56-57, 2 req'd; 58-62, 1 req'd)	$6.99
28798	53-62	Clutch Rod "G" Clip Retainer	$1.09
35685	56-62	Flywheel to Crankshaft Bolts - 6 pc set	$12.99
44622	55-62	Flywheel to Crankshaft Bolt	$0.99
K1465	56-62	Pressure Plate to Flywheel Bolts - 6 pc set	$11.99
32835	55-62	Transmission Clutch Housing Flywheel Inspection Cover	$29.99
32836	55-62	Transmission Clutch Housing Inspection Cover Bolt Set	$3.99
32837	55-62	Transmission Clutch Housing Underpan	$45.99

1955-1962 CLUTCH

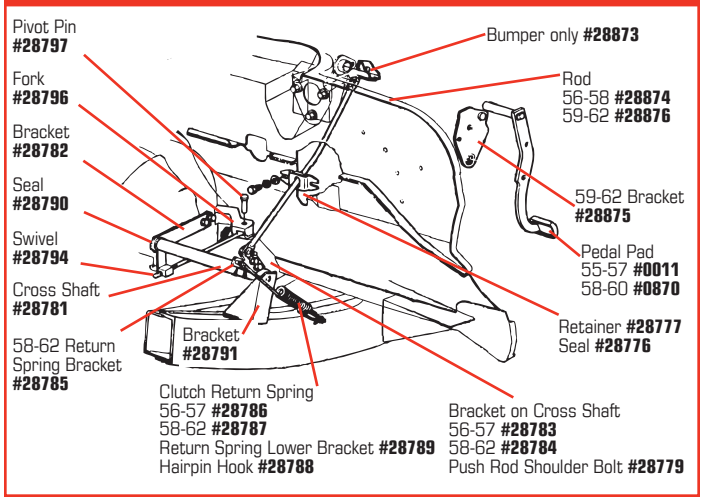

800-458-3475
CorvetteAmerica.com
WARNING: Cancer and Reproductive Harm — www.P65Warnings.ca.gov

Transmission

51233	60-62	Auto Transmission Flex Plate - HP	$50.99
51210	62	Auto Transmission Ring Gear	$22.99
32838	62	Auto Transmission Underpan	$55.99
35684	62	Auto Transmission Underpan Bolts - 4 pc	$4.99
32821	55-59	Bell Housing Bolt Set - TR - 7 pc	$13.99
32822	60-62	Bell Housing Bolt Set - 6 pc	$10.99
35676	57-62	Clevis - 4 Speed Shifter Lever Linkage	$18.99
28775	53-62	Crossmember to Frame Bolt Kit	$4.99
29480	53-55	Neutral Safety Switch - Auto - 6 volt	$91.99
29481	55-57	Neutral Safety Switch - Auto - 12 volt	$82.99
50682	57-62	Neutral Safety Switch	$26.99
25786	58-60	Neutral Safety Switch - Auto	$86.99
32825	62	Powerglide Dipstick Tube	$42.99
32826	62	Powerglide Filter & Gasket Kit	$9.99
35682	55-57	Powerglide Kickdown Linkage Set - 1x4	$171.99
35754	53-60	Powerglide Neutral Safety Switch Bracket w/ Mount Kit	$152.99
35755	54-60	Powerglide Neutral Safety Switch Rod	$36.99
35756	53-60	Powerglide Neutral Safety Switch Shield	$39.99
35679	56-61	Shift Lever on Trans - Automatic	$123.99
28773	56-62	Retainer to Crossmember Bolt Kit	$4.99
28682	53-62	Rubber Mount Retainer	$29.99
35677	56-62	Shift Lever on Trans - 3 Speed - Reverse & 1st	$55.99
35678	56-62	Shift Lever on Trans - 3 Speed - 2nd & 3rd	$55.99
35670	57-62	Shift Lever on Trans - 4 Spd BW - 1st & 2nd	$20.99
35671	57-62	Shift Lever on Trans - 4 Spd BW - 3rd & 4th	$22.99
35672	57-62	Shift Lever on Trans - 4 Spd BW - Reverse	$22.99
35673	57-62	Shift Lever on Trans - 4 Spd Muncie - 1st & 2nd	$17.99
35674	57-62	Shift Lever on Trans - 4 Spd Muncie - 3rd & 4th	$22.99
35675	57-62	Shift Lever on Trans - 4 Spd Muncie - Reverse	$17.99
35187	56-62	Shift Rod Clevis Pin w/ Cotter Pin	$1.99
28798	56-62	Shift Rod "G" Clip Retainer	$1.09
33439	55-62	Speedo Drive Gear - Metal - 3.08 - 3.55	$40.99
33440	55-60	Speedometer Drive Gear - 18 Tooth - Brown	$13.99
33441	55-60	Speedometer Drive Gear - 20 Tooth - Blue	$13.99
33442	55-60	Speedometer Drive Gear - 21 Tooth - Red 55-60 Power Glide w/ 3:55 Rear Axle	$13.99
33443	55-60	Speedometer Drive Gear - 22 Tooth - Green 56-60 3 or 4 Speed w/ 3:70 Rear Axle	$13.99
33444	55-60	Speedometer Drive Gear - 24 Tooth - Yellow 56-60 3 or 4 Speed w/ 4:11 Rear Axle	$13.99
32834	57-62	Speedometer Gear Fitting Retainer	$6.99
33998	55-62	Speedometer Gear Fitting Seal - 11/16"	$1.99
33997	60-62	Speedometer Gear Fitting in Trans - 4 Speed	$21.99
K1439	62	Trans to Engine Bolt Set - Powerglide - 6 pc	$5.99
37311	62	Transmission Modulator Gasket	$1.99
41276	53-54	Transmission Modulator Vacuum Line	$37.99
32827	62	Transmission Mount Adapter Plate - Manual & Automatic	$15.99
35680	55-61	Transmission Mount Bracket - Automatic	$129.99
32818	56-62	Transmission Slip Yoke - 16 Spline	$102.99
41273	56-62	Transmission Slip Yoke - 26 Spline	$102.99
32823	56-62	Trans to Bell Housing Bolt Set - Manual - 4 pc	$6.99
41274	57-62	Transmission Bearing - 4 Spd Main or Rear	$24.99
41275	55-62	Transmission Bearing - 3 Spd Main	$70.99
32819	57-62	Transmission Gasket Set - 4 Spd Borg-Warner	$18.99
32827	62	Trans Mount Adapter Plate - Manual & Auto	$15.99
28460	57-62	Transmission Rebuild Kit - T10	$273.99
32818	56-62	Transmission Slip Yoke - 16 Spline	$102.99
41273	56-62	Transmission Slip Yoke - 26 Spline	$102.99
35681	62	Trans Crossmember to Frame Shim - 2 req'd	$4.99
28772	56-62	Transmission Mount Bolts - "UR" - pr	$6.99
35680	55-61	Transmission Mount Bracket - Automatic	$129.99
28684	56-62	Transmission Mount Bracket - 3 speed	$19.99
28683	56-61	Transmission Mount Bracket - 4 speed	$18.99
32824	56-61	Trans Mount Bracket to Trans Bolts - AP - pr	$4.99
28774	53-62	Transmission Mount Frame Crossmember	$173.99
28681	53-62	Transmission Mount - Rubber	$83.99
34819	58-62	Transmission Mount - Poly	$36.99
41273	56-62	Transmission Slip Yoke - 26 Spline	$102.99

1956-1962 AUTO TRANSMISSION

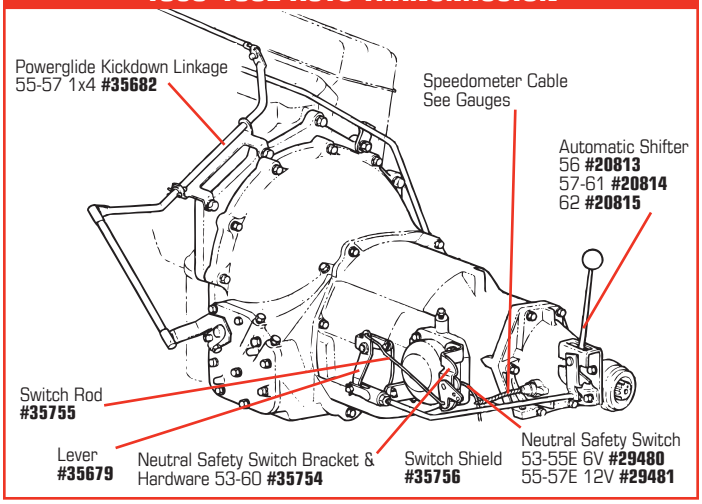

1956-1962 MANUAL TRANSMISSION

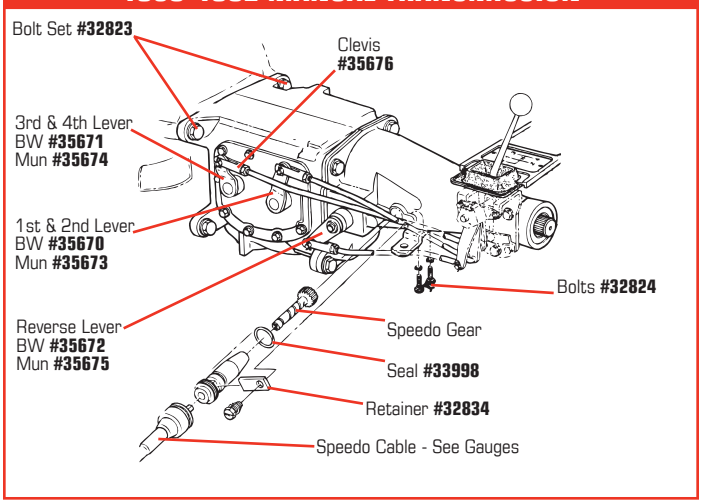

1953-1962 TRANSMISSION MOUNT

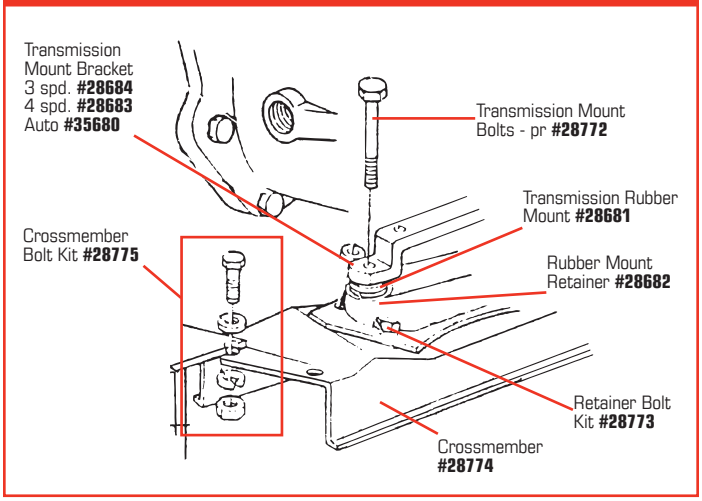

Sill Plates

Sill Plates

1852	56-60	Sill Plates - pr	$223.99
0700	61-62	Sill Plates w/ Spacers - pr	$239.99
K1006	56-60	Sill Plate Screws - 18 pc set	$5.99
1854	56-60	Sill Plate Spacers - White Oak - pr	$30.99
K1007	61-62	Sill Plate Screws - 10 pc set	$3.99
25590	61-62	Sill Plate Spacers - pr	$22.99
1853	56-60	Step Plates - pr	$93.99
28726	58-62	Wire Cover Floor Plates under Carpet - pr	$54.99
K1214	58-62	Wire Cover Floor Plate Screws - 8 pc set	$3.99

Softtop & Deck Lid

Softtop Frames

Replace your damaged, rusted or even missing softtop frame with an exact reproduction of the original. They feature black powder coating to ensure long life. Mounting hardware, Weatherstripping and Convertible Top must be ordered separately.

23096	53-55	Softtop Frame - New	$2378.99
23097	56-60	Softtop Frame - New	$2509.99
23098	61-62	Softtop Frame - New	$2509.99
41288	56-58	Softtop Frame Rebuild Hardware Kit	$150.99
41289	59-60	Softtop Frame Rebuild Hardware Kit	$150.99
41290	61-62	Softtop Frame Rebuild Hardware Kit	$150.99

1956-1962 SOFTTOP MOUNT BRACKETS

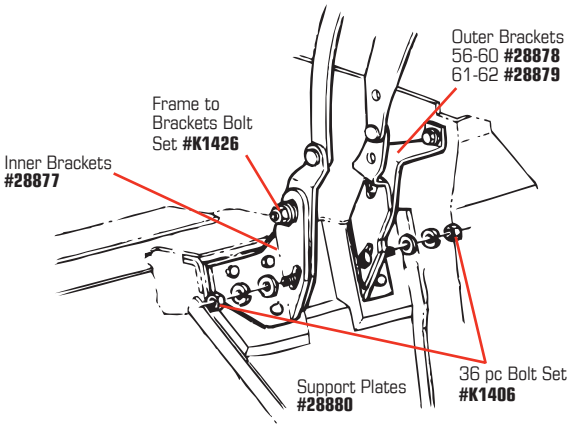

#41291 #28882

#23020 #41293

#41292

Softtop / Convertible Top Hardware

23020	56-57	Convertible Top Latch - Rear	$153.99
0186	58-62	Convertible Top Latch - Rear	$123.99
28881	56-62	Convertible Top Latch - Rear Gaskets - pr	$4.99
K1484	56-62	Convertible Top Header Latch To Top Screws	$4.99
K1203	58-62	Conv. Top Latch Mount Screws/Nuts - 16 pc set	$9.99
23545	56-62	Conv. Top Side Rail Screws - 4 pc set	$3.99
33300	56-60	Conv. Top Bow - Rear	$292.99
28877	56-62	Inner Softtop Mount Brackets - pr	$154.99
28878	56-60	Outer Softtop Mount Brackets - pr	$155.99
28879	61-62	Outer Softtop Mount Brackets - pr	$139.99
28882	56-60	Rear Softtop Latch on Top w/ Plates - pr	$104.99
28883	61-62	Rear Softtop Latch on Top - pr	$106.99
K1428	56-62	Rear Softtop Latch on Top Screws - 8 pc set	$3.99
41282	56-58	Softtop Front Arm - LH	$162.99
41283	56-58	Softtop Front Arm - RH	$162.99
41284	59-62	Softtop Front Arm - LH	$152.99
41285	59-62	Softtop Front Arm - RH	$152.99
41287	59-62	Softtop Front Arm Mount Kit	$24.99
41286	59-62	Softtop Header - Front Arm L Brackets - pr	$57.99
28614	56-62	Softtop Latch - Front LH - Correct	$121.99
28613	56-62	Softtop Latch - Front RH - Correct	$121.99
28617	56-62	Softtop Latch Backplates - pr	$45.99
41291	53-55	Softtop Latches - Front on Top - pr	$495.99
41292	53-55	Softtop Latches - Rear on Top - pr	$496.99
41293	53-55	Softtop Latches - Rear on Decklid - pr	$314.99
41294	53-55	Softtop Latch Striker Plates - Rear on Decklid - pr	$117.99
27775	56-62	Softtop Guide Pin	$11.99
28880	56-62	Softtop Bracket Support Plates - pr	$217.99
K1426	56-62	Softtop Frame to Bracket Bolt Kit	$12.99
K1406	56-62	Softtop Mount Brackets to Bulkhead Bolts - 36 pc	$9.99
42566	56-62	Softtop Rear Pivot Bolt, Nut & Bushing Kit	$44.99
K1427	56-62	Softtop Pad to Frame Screw & Washer Kit	$11.99
23546	56-62	Well Nut - Conv Top Side Rail WS - 16 req'd	$2.99

800-458-3475
CorvetteAmerica.com
WARNING: Cancer and Reproductive Harm — www.P65Warnings.ca.gov

Deck Lid

32849	56-62	Deck Lid Hinge Shim Set - 6 pc	$14.99
32842	56-62	Deck Lid Latch Anti-Rattle Spring	$5.99
32840	58-62	Deck Lid Latch Assembly - Female	$120.99
32845	58-62	Deck Lid Latch Assembly - Male	$53.99
32844	58-62	Deck Lid Latch Screw Set - On Lid	$3.99
K1251	58-62	Deck Lid Latch Screw Set - On Body	$2.99
32848	58-62	Deck Lid Latch Screws - Male 3pc Set	$3.99
32841	58-62	Deck Lid Lock Pop-Up Spring	$9.99
41295	53-57	Deck Lid Lock Striker Shim	$8.99
35701	56-57	Deck Lid Male Lock Striker	$26.99
28675	56-62	Deck Lid Molding Clip and Screw Set	$46.99
28731	57-62	Deck Lid Open Push Button	$20.99
28732	56-62	Deck Lid Open Push Button Bezel	$20.99
35702	58-62	Deck Lid Open Push Button Rod w/ Clip	$17.99
32843	56-62	Deck Lid Stops with Screws - pr	$6.99
28925	56-60	Deck Lid & Trunk Hinge Spring Set	$38.99
28926	61	Deck Lid & Trunk Hinge Spring Set	$30.99
28930	62	Deck Lid & Trunk Hinge Spring Set	$37.99
32847	53-58	Deck Lid / Trunk Hinge Bolt Set - 6 pc	$15.99
K1246	59-62	Deck Lid / Trunk Hinge Bolt Set - 6 pc	$8.99

1956-1962 SOFTTOP HEADER LATCHES

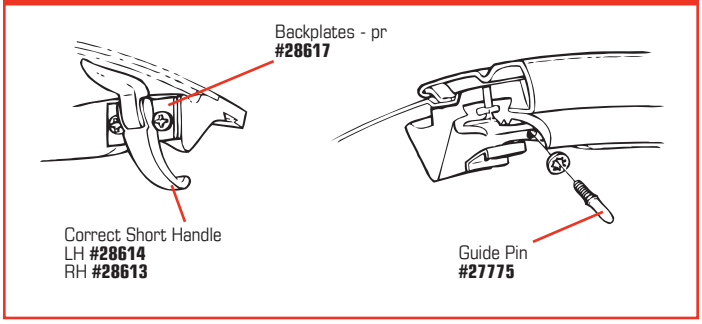

1956-1962 SOFTTOP DECK LID LATCH

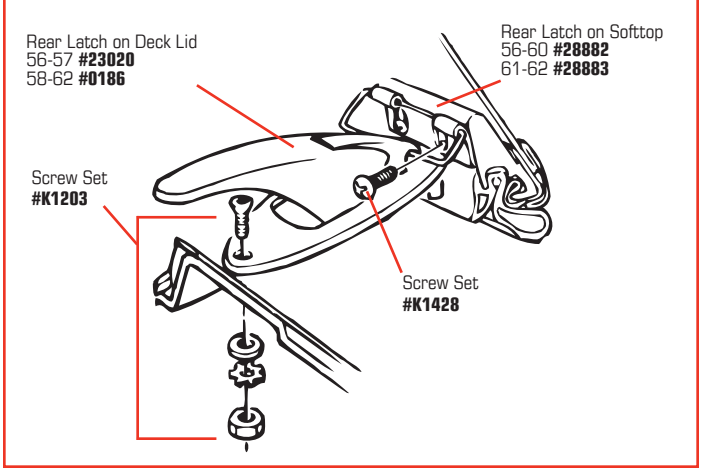

1956-1962 SOFTTOP & DECK LID

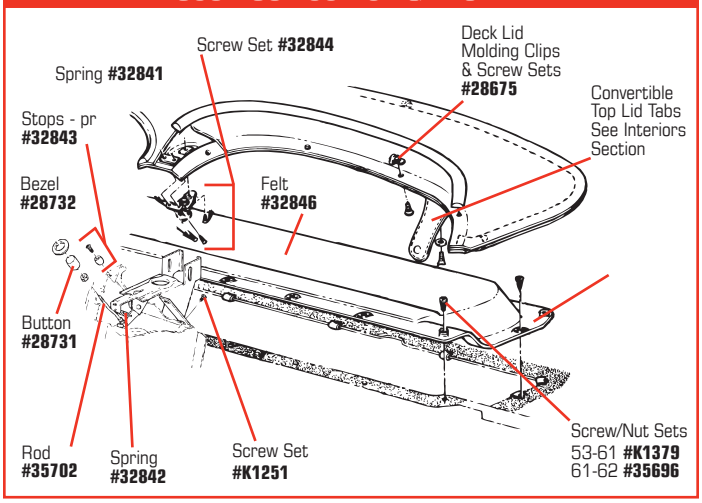

In-Stock & Ready for Shipping!

Our inventory has thousands of products for every Corvette generation. Most orders are processed & shipped the same day! Our Sales Team will help you find the right parts for your Corvette.

WARNING: Cancer and Reproductive Harm — www.P65Warnings.ca.gov

Serving the Corvette Community Since 1977.

STEERING WHEELS

Our Steering Wheels are precise replicas of competition-type wheels with a plastic, leather-grain rim. As noted in the NCRS Judging Manual, they show flashing on the mold seam around outer circumference and the stainless steel spokes have circumferential finishing marks on top side and radial direction marks on bottom.

20026 61 Blue
20027 61-62 Fawn
20029 59-60 Turquoise

1959-1962 Steering Wheel $438.99

1959-62 REPRO. STEERING WHEELS W/HUB KIT

20336 61 Blue
20337 61-62 Fawn
20339 59-60 Turquoise

1959-1962 Reproduction Steering Wheel w/ Hub Kit $519.99

3-SPOKE 15" STEERING WHEELS

If your goal is to update a C1 Corvette interior without destroying its character and personality, then you'll want to take a close look at these direct replacement steering wheels. These smaller diameter wheels fit the OEM column and feature a thicker more comfortable grip. Solid stainless steel frame. Uses factory hub and horn button.

28577 56-62 Steering Wheel - 3 Spoke 15" Red $257.99
28578 56-62 Steering Wheel - 3 Spoke 15" Black $257.99

1953-1962 STEERING WHEEL

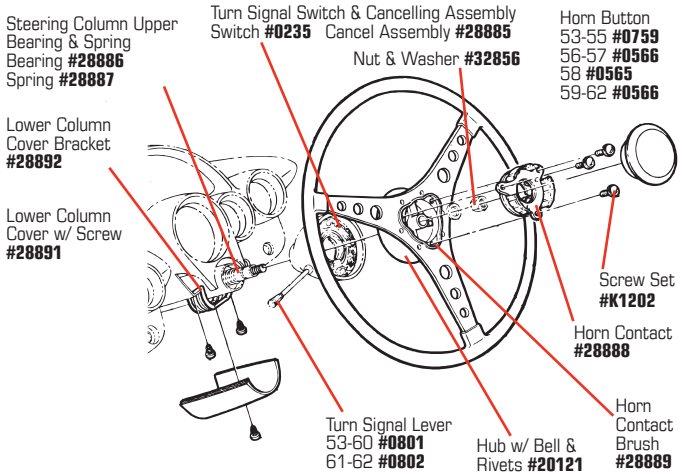

#0759

#0566

#35369

#40992

#0801

#0802

STEERING WHEEL COMPONENTS

35370	56-57	Emergency Brake Flasher Chrome Plug	$6.99
40992	55-62	Horn - F Note - Low - Replacement	$30.99
52625	61-62	Horn Assemblies - High/Lo - pr	$183.99
0759	53-55	Horn Button Assembly	$80.99
0566	56-62	Horn Button (exc. 1958)	$46.99
0565	58	Horn Button	$46.99
28888	56-62	Horn Contact	$28.99
28889	56-62	Horn Contact Brush	$8.99
35703	56-62	Horn Contact Plastic Rivets - 3 pc set	$2.99
K1202	56-62	Horn Contact Screw Set	$2.99
41313	53-54	Horn Relay - Replacement	$23.99
41299	53-55	Horn Ring	$702.99
3873	53-62	Horn Wire Lead Harness	$14.99
28890	58-62	Lower Steering Column Cvr. w/ Bracket & Screw	$75.99
28891	58-62	Lower Steering Column Cover w/ Screw	$56.99
28892	58-62	Lower Steering Column Cover Bracket	$24.99
20120	56-62	Rivet Set - Steering Wheel Hub	$24.99
35369	53-57	Steering Column Bezel On Dash	$67.99
20121	56-62	Steering Wheel Hub - w/ Bell & Rivets	$137.99
32856	56-62	Steering Wheel Retaining Nut & Washer	$2.99
0801	53-60	Turn Signal Lever	$21.99
0802	61-62	Turn Signal Lever	$21.99
32850	53-62	Turn Signal Lever Jamb Nut	$2.99
28885	53-62	Turn Signal Cancelling Switch Assembly	$64.99
32854	56-62	Turn Signal Cancel Switch Centering Spring	$9.99
32853	56-62	Turn Signal Cancel Switch Pivot Bolt	$11.99
32852	56-62	Turn Signal Cancel Switch Pivot Springs - pr	$5.99
32851	56-62	Turn Signal Cancel Switch "W" Spring	$9.99
32855	53-62	Turn Signal Housing Lock Wedge & Screw	$7.99
0235	53-62	Turn Signal Switch	$28.99
28886	53-62	Upper Steering Column Bearing	$48.99
28887	53-62	Upper Steering Column Bearing Spring	$7.99

800-458-3475
CorvetteAmerica.com
WARNING: Cancer and Reproductive Harm — www.P65Warnings.ca.gov

Steering Columns & Adaptors

52360	53-57	Steering Column - Non-Tilt - Steel	$383.99
52361	53-57	Steering Column - Non-Tilt - Chrome	$521.99
52362	53-57	Steering Column - Non-Tilt - Black	$521.99
52363	58-62	Steering Column - Non-Tilt - Steel	$387.99
52364	58-62	Steering Column - Non-Tilt - Chrome	$521.99
52365	58-62	Steering Column - Non-Tilt - Black	$542.99
52372	53-62	Steering Column Install Kit - Original Harness	$101.99
52373	53-62	Steering Column Install Kit - Aftermarket Harness	$55.99
52378	53-62	Steering Column Flasher Kit - 4 Way- Ididit	$45.99
52383	56-62	St. Wheel Adaptor - Ididit - 6 Bolt Chrome	$130.99
52384	56-62	St. Wheel Adaptor - Ididit - 6 Bolt Black	$135.99

#52383

#52384

Steering Column Overhaul Kits

Includes steering column shaft with worm gear, sector roller with roller shaft bolt, upper bearing, small bearing and seal kit.

21197	53-57	Steering Column Overhaul Kit	$460.99
21198	58-62	Steering Column Overhaul Kit	$474.99

#32875

#32878

Steering Column Mounting

32868	53-62	A-Arm Pivot Shaft Seal Kit - 16 pc	$43.99
25346	53-62	Bracket - Front Crossmember Support - 4 req'd	$87.99
28907	56-62	Fast Steering Adapter w/ Stud Kit	$159.99
32869	53-62	Front A-Arm/Control Arm Pivot Bushing	$35.99
K1471	53-62	Front Crossmember to Frame Bolt/Nut Kit	$24.99
32875	53-62	Pitman Arm Drag Link Rebuild Kit	$117.99
32876	53-62	Pitman Arm Link Seal	$12.99
32877	53-62	Pitman Arm Nut	$10.99
32878	53-62	Pitman Arm Ball Stud	$48.99
28893	53-62	Steering Column Mount Bracket - under Dash	$24.99
35706	53-62	Steering Column Mount Bracket - U-Shape	$31.99
K1278	53-59	Steering Column Mount Bracket Bolts - 8 pc	$3.99
K1330	60-62	Steering Column Mount Bracket Bolts - 6 pc	$3.99
28894	53-62	Steering Column Mount Bracket Seal	$11.99
35707	53-62	Steering Column Mount Bracket Shims - 3 pc	$12.99
32857	53-62	Steering Column Gasket on Inner Firewall - Hard	$35.99
32858	53-62	Steering Column Gasket on Inner Firewall - Soft	$6.99
41303	53-57	Steering Column Plate on Outer Firewall	$35.99
32859	58-62	Steering Column Plate on Outer Firewall	$15.99
32684	53-57	Steering Column Plate Caulk Strip	$7.99
32860	53-62	Steering Column Plate Gasket	$6.99
K1440	56-62	Steering Column Plate Screws - 6 pc set	$3.99
K1430	53-62	Steering Box to Frame Bolt Set	$13.99
32861	53-62	Steering Box Seal Kit	$85.99
41300	53-62	Steering Box Side Cover Gasket	$5.99
42444	63	Steering Jacket Wedge & Screw	$7.99
32878	53-62	Third Arm Ball Stud	$48.99
X2569	53-62	Third Arm Bearing	$35.99
32880	53-62	Third Arm Bearing Snap Ring	$9.99
32881	53-62	Third Arm Bearing Seal	$4.99
42567	53-62	Third Arm Bushing Stud - w/ Nut	$32.99
35712	53-62	Third Arm Stud-to-Bracket Castle Nut	$3.99
X2101	53-62	Tie Rod Tube	$30.99
28903	53-62	Tie Rod End - LH	$24.99
28904	53-62	Tie Rod End - RH	$24.99
X2240	53-62	Tie Rod End - pr	$40.99
X2102	53-62	Tie Rod End Clamp	$7.99
28906	53-62	Tie Rod End Clamp Bolt Kit "TR"	$7.99

WARNING: Cancer and Reproductive Harm — www.P65Warnings.ca.gov

1953-1962 STEERING COLUMN MOUNTING

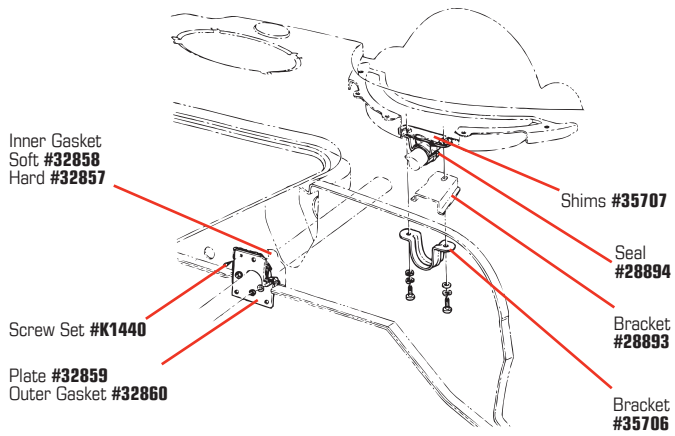

1953-1962 STEERING BOX & DRAG LINK

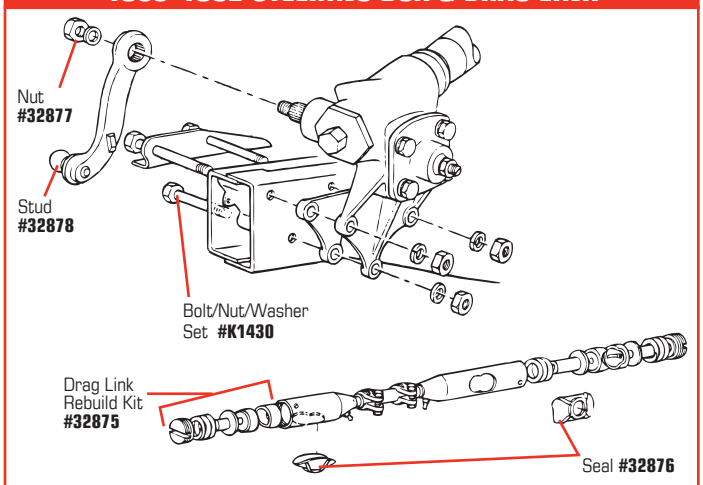

1953-1962 STEERING TIE ROD

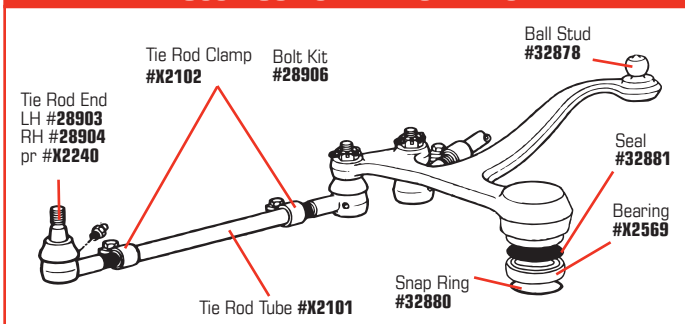

Price Match Guarantee

Corvette America will match any competitor's price!
Call 800-458-3475 for details.

SUSPENSION

28896	53-62	Front Shock	$45.99
28897	53-62	Front Shock Mount Bracket - Lower	$24.99
35722	53-62	Front Shock Mount Kit	$18.99
33370	53-62	Front Spindle Nut & Cotter Pin	$8.99
32874	53-62	Front Spindle Washer	$4.99
28895	53-62	Front Stabilizer Links - pr	$37.99
X2178	53-62	Front Suspension Bumper Set - 4 pc	$22.99
X2167	56-62	Front Suspension Shim - Aluminum	$26.99
42568	53-59	Front Sway Bar - 7/8" - Replacement	$193.99
28898	53-62	Front Sway Bar - 1" - Replacement	$220.99
35720	53-62	Front Sway Bar Bushings - Poly 1" - pr	$31.99
35719	60-62	Front Sway Bar Bushings - Poly 13/16" - pr	$37.99
37562	53-59	Front Sway Bar Bushing - Rubber - 5/8" - pr	$16.99
25766	57-62	Front Sway Bar Bushings - Rubber -13/16" - pr	$17.99
35715	53-62	Front Sway Bar Bushing Bracket	$14.99
35716	53-62	Front Sway Bar Bushing Bracket Bolts - 4 pc	$4.99
35717	53-62	Front Sway Bar Bushing Plate	$7.99
28901	53-62	Front Sway Bar Links	$26.99
28900	53-62	Front Wheel Bearing - Inner	$60.99
32871	56-62	Front Wheel Bearing Dust Caps - pr	$30.99
41305	53-62	Front Wheel Roller Bearing Kit	$230.99
50661	53-62	Front Wheel Bearing - Outer	$30.99
50662	53-62	Front Wheel Bearing Seal - Inner	$13.99
51278	53-62	Front Wheel Ball Bearing Kit	$203.99
32863	56-62	Grease Fitting Kit - 22 pc	$24.99
0966	53-62	King Pin Set - does both sides	$69.99
0963	53-62	Lower Inner Shaft Kit - 5 pc	$102.99
32865	53-62	Lower Inner Shaft - Bushing Only	$30.99
32866	53-62	Lower Inner Shaft to Crossmember Bolt Set	$23.99
0965	53-62	Lower Outer Pin Kit - 5 pc	$35.99
32867	53-62	Lower Outer Shaft Jamb Nuts - pr	$10.99
K1291	53-62	Lower Shock Mount Bracket Bolt Kit	$1.99
20390	53-62	Springs - Front Standard - pr	$96.99
41304	56-62	Static Collector - Front	$27.99
32872	53-62	Steering Knuckle Upper Pinch Bolt/Nut Kit	$5.99
X2109	53-62	Upper Inner Shaft Kit	$81.99
32864	53-62	Upper Inner Shaft - Bushing Only	$30.99
X2108	53-62	Upper Outer Pin Kit	$50.99

800-458-3475
CorvetteAmerica.com
WARNING: Cancer and Reproductive Harm — www.P65Warnings.ca.gov

#X2129

#25361

#25369

#41307

Front Suspension Rebuild Kits

Kits include the components shown in this chart...

X2130	**Deluxe Kit... BEST VALUE!**				**$835.99**
X2129	**Standard Kit**			**$580.99**	
0966	King Pin Set	$69.99	ea	1	1
0963	Lower Inner Shaft Kit	$102.99	ea	2	2
0965	Lower Outer Pin Kit	$35.99	ea	2	2
X2109	Upper Inner Shaft Kit	$81.99	ea	2	2
X2108	Upper Outer Pin Kit	$50.99	ea	2	2
X2240	Tie Rod End - LH & RH	$40.99	pr	1	2
28895	Front Sway Bar Links	$37.99	pr	1	1
X2101	Tie Rod Tube	$30.99	ea	-	2
X2102	Tie Rod Tube End Clamps	$7.99	ea	-	4
X2167	Suspension Shim	$26.99	ea	-	2
X2569	Third Arm Bearing	$35.99	ea	-	1
32881	Third Arm Bearing Seal	$4.99	ea	-	1
32867	Shaft Jam Nuts - Standard	$10.99	pr	-	1
20390	Front Springs - Standard	$96.99	pr	-	1
X2178	Fr. Susp. Bumpers - 4 pc set	$22.99	ea	-	1

1953-1962 FRONT SUSPENSION

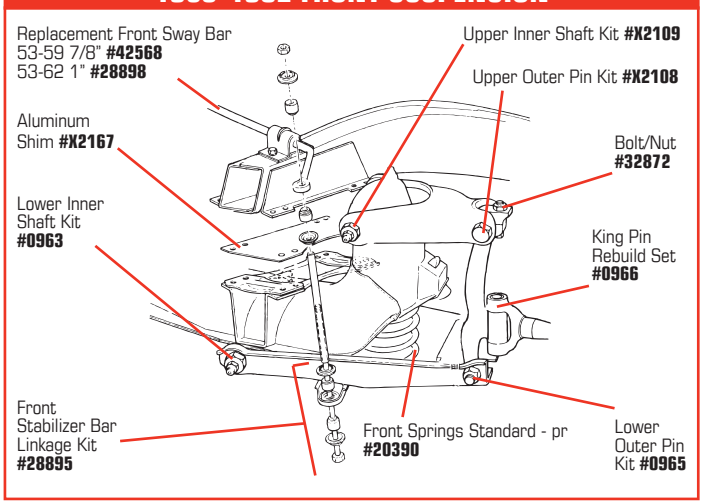

Monroe Shock Absorbers

51262	53-62	Monroe Shock Absorber - Front	$55.99
51264	53-62	Monroe-Matic Plus Shock Absorber - Rear	$29.99

Bilstein Gas Shock Absorbers

43900	53-62	Bilstein Shock - Front	$113.99
43901	53-62	Bilstein Shock - Rear	$120.99

Gas pressure shocks are constructed to dissipate heat more effectively to improve the ride, handling & control of your car. They are built to last with a lifetime warranty to prove it.

Rear Suspension

35734	53-58	Rear Axle Bumpers - Over Axle - pr	$50.99
35744	57-62	Rear Axle Housing/Bearing Retainer	$15.99
41306	56-62	Rear Axle U-Bolt & Nut Set	$50.99
25369	56-62	Rear Axle U-Bolt (4 req'd)	$12.99
25370	53-62	Rear Axle U-Bolt Nut (8 req'd)	$3.99
25345	53-62	Rear Crossmember	$450.99
35732	53-62	Rear Crossmember Rivets - 4 pc set	$6.99
35750	53-55	Rear End Center Section Housing Gaskets	$24.99
35735	57-58	Rear Leaf Spring Bumpers- Front Over Axle - pr	$50.99
40494	53-56	Rear Spring Front Hanger Bracket - LH	$68.99
40495	53-56	Rear Spring Front Hanger Bracket - RH	$68.99
25367	56-59	Rear Lower Spring Shock Plates - pr	$139.99
25368	60-62	Rear Lower Spring Shock Plates - pr	$139.99
32888	53-62	Rear Shock Lower Cupped Washer	$2.99
28915	56-62	Rear Shock Stud	$23.99
25361	53-62	Rear Spring Bushing Set - 12 pc	$25.99
34810	54-62	Rear Spring Bushing Set - Polyurethane	$36.99
28913	53-62	Rear Spring Front Eyelet Pin	$45.99
K1353	53-62	Rear Spring Eyelet Pin Nuts w/ Washers - set	$4.99
28911	56-62	Rear Spring Front Hanger Bracket - LH	$68.99
28912	56-62	Rear Spring Front Hanger Bracket - RH	$68.99
35733	56-57	Rear Spring Front Hanger Bracket Bolts- 8 pc set	$12.99
25359	53-62	Rear Spring Rebuild Kit - 4 Leaf	$60.99
32887	58-62	Rear Spring Front Hanger Bracket Bolt Set	$15.99
41307	53-62	Rear Spring Mount Kit - Includes Bushings, Shackles & Eye Pins	$172.99
25362	53-62	Rear Spring Shackle Kit (rear bushings included)	$40.99
41308	53-55	Rear Wheel Bearing	$75.99
52381	56	Rear Wheel Bearing - 1" O Ring Seals	$56.99
28918	57	Rear Wheel Bearing	$55.99
28916	58-62	Rear Wheel Bearing - 2 required	$40.99
28917	58-62	Rear Wheel Bearing Seal Set	$10.99
1402	53-62	Shock Absorber - Rear	$83.99
40497	60-62	Sway Bar Bracket - Rear Outer	$13.99
35731	56-58	Upper Shock Mount Paper Covers - pr	$4.99

WARNING: Cancer and Reproductive Harm — www.P65Warnings.ca.gov

1953-1962 REAR SUSPENSION

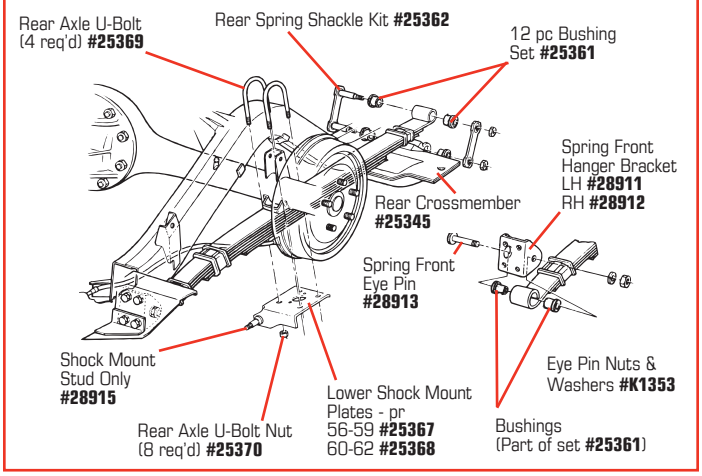

1956-1962 REAR SUSPENSION

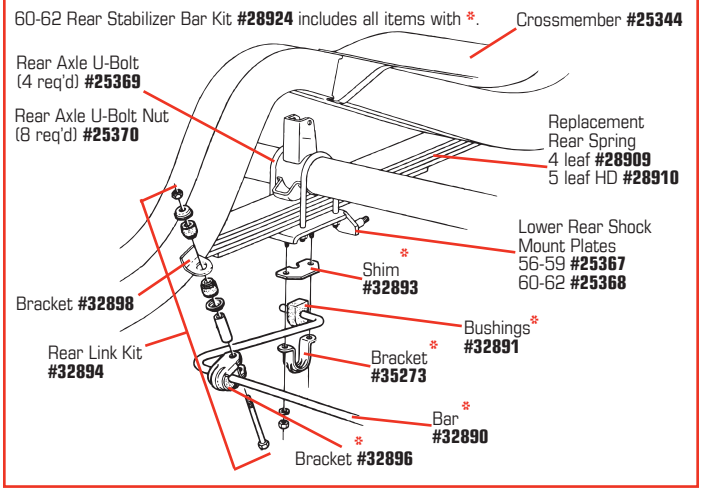

1953-1962 REAR DIFFERENTIAL

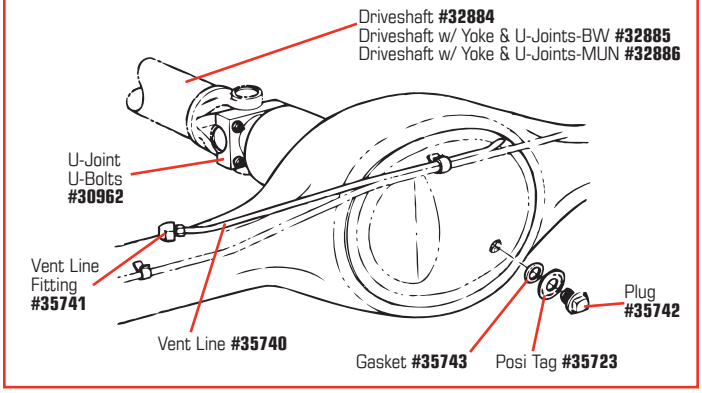

1953-1962 REAR AXLE REBOUND STRAPS

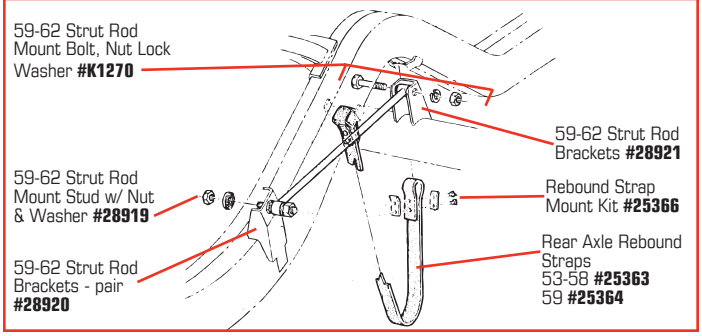

Rear Differential

34346	53-62	Aero-Rivet Tool	$96.99
41309	53-55	Driveshaft w/ U-Joints - 6 Cyl	$167.99
32885	55-62	Driveshaft w/ Yoke & U-Joints - Borg-Warner	$299.99
32886	56-62	Driveshaft w/ Yoke & U-Joints - Muncie	$297.99
32884	56-62	Driveshaft - 2-1/2" Diameter	$206.99
35747	53-62	Driveshaft Part Number Stencil	$22.99
28908	53-62	Driveshaft U-Joint - Greasable	$14.99
30965	55-62	Driveshaft/Halfshaft U-Joint	$18.99
30962	53-62	Driveshaft U-Joint, U-Bolt & Nut Kit	$7.99
35748	56-62	Driveshaft Underbody Metal U-Joint Shield	$44.99
35723	57-62	Limited Slip Rear End Tag - Metal	$6.99
27539	56-62	Rear Axle Drain Plug Gasket	$8.99
35724	55-62	Rear Axle Ratio ID Tag - 3.70	$5.99
35725	55-62	Rear Axle Ratio ID Tag - 3.55	$5.99
35726	55-62	Rear Axle Ratio ID Tag - 3.36	$5.99
35727	55-62	Rear Axle Ratio ID Tag - 3.08	$5.99
35728	55-62	Rear Axle Ratio ID Tag - 4.11	$5.99
35729	55-62	Rear Axle Ratio ID Tag - 4.56	$5.99
35739	53-62	Rear Diff. to Axle Housing Nuts & Washers - 20	$18.99
35746	53-62	Rear Differential Vent	$4.99
43732	56-62	Rear Differential Flange Bolt Kit	$8.99
36913	56-62	Rear Differential Flange Nut w/ Washer	$15.99
42569	57-62	Rear Differential Rebuild Kit - w/ Positraction	$254.99
42570	56-62	Rear Differential Rebuild Kit - w/o Positraction	$183.99
35737	53-62	Rear End Center Section to Housing Gasket	$6.99
42586	53-62	Rear End Gear Lube	$26.99
35742	56-62	Rear End Filler Plug	$16.99
35743	56-62	Rear End Filler Plug Gasket	$1.99
35736	53-62	Rear End Outer Axle Housing Gasket	$3.99
35738	56-62	Rear Pinion Seal	$16.99
32818	56-62	Transmission Slip Yoke - 16 Spline	$102.99
41273	56-62	Transmission Slip Yoke - 26 Spline	$102.99
35741	57-62	Vent Fitting - Posi Rear Vent Line	$4.99
35740	57-62	Vent Line - Posi Rear	$18.99
25344	53-62	Rear Crossmember - Over Axle	$336.99
28909	53-62	Rear Spring - 4 Leaf Replacement	$160.99
28910	53-62	Rear Spring - HD - 5-Leaf Replacement	$196.99
25360	56-62	Rear Spring Rebuild Kit - includes Liners, Band, Rubber & Bolts - 4-Leaf	$164.99
52254	53-62	Rear Spring Bushing - Large 1.11" Out & .63" In	$3.99
52255	53-62	Rear Spring Bushing - Small - .85" Out & .50" In	$3.99
4238	53-62	Rear Stabilizer Bar Kit 3/4"	$183.99
28924	60-62	Rear Stabilizer Bar Kit (Complete)	$274.99
32890	60-62	Rear Stabilizer Bar	$149.99
32891	60-62	Rear Stabilizer Bar Bushings - pr	$19.99
35273	60-62	Rear Stabilizer Bar U-Bracket	$9.99
32893	60-62	Rear Stabilizer Bar Shim	$7.99
32894	60-62	Rear Stabilizer Bar Link Kit	$23.99
32895	60-62	Rear Stabilizer Bar Link Bushing Set - 8 pc	$11.99
32896	60-62	Rear Stabilizer Bar Link C-Bracket	$16.99
32897	60-62	Rear Stabilizer Bar Link C-Bracket Retainer	$9.99
32898	60-62	Rear Stabilizer Link Bracket - Welds to Frame	$16.99
25371	59-62	Rear Axle Bumpers - pr	$50.99
27591	56-62	Rear Axle Bumper Bolts - 4 pc	$3.99
25363	53-58	Rear Rebound Straps - pr	$70.99
25364	59	Rear Rebound Straps - pr	$70.99
25365	60-62	Rear Rebound Straps - pr	$71.99
25366	53-62	Rear Rebound Strap Hardware Kit	$13.99
28921	59-62	Rear Strut Rod Brackets (Rear End Hsng.) - pr	$84.99
28920	59-62	Rear Strut Rod Brackets (Weld to Frame) - pr	$137.99
X2247	59-62	Rear Strut Rod Bushing	$8.99
28919	59-62	Rear Strut Rod Mount Stud w/ Nut & Washer	$28.99
K1270	59-62	Rear Strut Rod Mount Hardware Kit	$9.99

800-458-3475
CorvetteAmerica.com
WARNING: Cancer and Reproductive Harm — www.P65Warnings.ca.gov

Switches

#0160

#30034

#41310

#50955

#41150

Switches

30034	58-62	Brake Light Switch - Replacement	$9.99
41098	58-62	Brake Light Switch Bracket	$16.99
25791	53-55	Courtesy Light Switch - Door Jamb	$24.99
35753	53-62	Courtesy Light Door Jamb Switch w/ Gasket & Screws	$27.99
41311	53-62	Courtesy Light Switch Gaskets - pr	$2.99
K1442	53-62	Courtesy Light Switch Screws - 4 pc set	$1.99
41310	53-54	Dimmer Switch - Replacement	$24.99
50955	55-57	Dimmer Switch	$24.99
25375	58-62	Dimmer Switch	$23.99
35172	55-62	Dimmer Switch Plug & Terminal Set	$3.99
K1293	55-62	Dimmer Switch Screws - pr	$1.99
0158	53-55	Headlight Switch 6 Volt	$63.99
0159	55-57	Headlight Switch 12 Volt	$50.99
0160	58-62	Headlight Switch	$30.99
27418	58-60	Headlight Switch Nut	$14.99
27419	61-62	Headlight Switch Nut	$14.99
35759	56-62	Horn Mount Nut Plate w/ Rivets	$8.99
41313	53-54	Horn Relay - Replacement	$23.99
35760	55-62	Horn Relay - Replacement	$20.99
K1271	55-62	Horn Relay Mount Screws - set	$1.99
35250	58-62	Horn Repair Kit - Does 2 Horns	$36.99
25376	55-57	Ignition Switch	$65.99
25377	58-59	Ignition Switch	$93.99
25378	60-62	Ignition Switch	$117.99
27413	56-59	Ignition Switch Nut	$9.99
27415	60-62	Ignition Switch Nut	$13.99
27414	58-62	Ignition Switch Spacer/Ferrule	$15.99
29480	53-55	Neutral Safety Switch - Auto, 6 Volt	$91.99
29481	55-57	Neutral Safety Switch - Auto, 12 Volt	$82.99
35754	53-60	Powerglide Neutral Safety Switch Bracket w/ Mount Kit	$152.99
35755	54-60	Powerglide Neutral Safety Switch Rod	$36.99
35756	53-60	Powerglide Neutral Safety Switch Shield	$39.99
41150	56-62	Power Window Switch - LH	$137.99
41151	56-62	Power Window Switch - RH	$80.99
0235	53-62	Turn Signal Switch	$28.99
28885	53-62	Turn Signal Cancelling Switch Assembly	$64.99
25592	59-62	Washer Switch Actuator Assembly	$11.99
25593	57-62	Wiper Switch Actuator Assembly	$7.99

Tires

Reproduction Tires

Our precision reproductions of Goodrich, Firestone and U.S. Royal tires give your 1955-1962 Corvette a 100% correct look! All are the correct size, 6.70 x 15, and are available in Blackwall or Whitewall like the originals. Whitewalls are of the correct width, ranging from 1" to 2 11/16".

35770	56-62	6.70 x 15 Firestone - Blackwall	$203.99
35768	62	6.70 x 15 Firestone - 1" Whitewall	$203.99
35767	61	6.70 x 15 Firestone - 2 1/4" Whitewall	$203.99
35766	56-60	6.70 x 15 Firestone - 2 11/16" Whitewall	$203.99
1783	55-62	6.70 x 15 Goodrich - Blackwall	$203.99
1782	62	6.70 x 15 Goodrich - 1" Whitewall	$198.99
1781	55-61	6.70 x 15 Goodrich - 2 1/2" Whitewall	$203.99
35769	56-62	6.70 x 15 U.S. Royal - Blackwall	$208.99
35765	62	6.70 x 15 U.S. Royal - 1" Whitewall	$238.99
35764	56-60	6.70 x 15 U.S. Royal - 2 1/2" Whitewall	$238.99
35763	56-60	6.70 x 15 U.S. Royal - 2 11/16" Whitewall	$238.99

Whitewall Radials

Get vintage looks with radial drivability. These are vintage-looking tires with 2 3/8" wide whitewalls that are actually smooth-riding, gas-saving radials! These are the real thing, not a retread nor painted imitation, with polyester and steel belts for safe, aggressive all-season driving and most importantly, 100% Corvette style.

35773	56-61	P205/75R15 Radial Tire - 2 3/8" Whitewall	$217.99

Goodyear Tires

51871	55-64	Goodyear 6.70 x 15 - BW 4-ply Poly	$219.99
51870	56-60	Goodyear 6.70 x 15 - 2 11/16" WW	$259.99
51869	56-61	Goodyear P205/75R15 Radial - 2 3/4" WW	$319.99
51868	61	Goodyear 6.70 x 15 - 2 1/4" WW	$239.99
51872	62	Goodyear 6.70 x 15 - 1" WW 4-ply	$229.99

WARNING: Cancer and Reproductive Harm — www.P65Warnings.ca.gov

TRUNK & SPARE TIRE COMPONENTS

32900	56-60	Lower Trunk Latch Adapter on Body	$23.99
32901	56-60	Lower Trunk Latch Adjuster Plate	$16.99
K1279	56-60	Lower Trunk Striker Bolts - pr	$1.99
32899	56-60	Rear Inner Fiberglass Trunk Panel	$264.99
K1443	56-60	Rear Inner Fiberglass Trunk Panel Screws - 17 pc	$5.99
0807	53-62	Spare Tire Bolt	$14.99
32905	53-62	Spare Tire Bolt Cushion on Frame	$4.99
32904	53-62	Spare Tire Bolt Nut on Frame	$11.99
35781	53-62	Spare Tire Bolt Nut on Frame Bolt Kit	$1.99
0805	56-60	Spare Tire Cover	$39.99
0806	53-62	Spare Tire Cover - exc. 56-60	$39.99
0808	53-62	Spare Tire Cover Cup	$14.99
32903	53-62	Spare Tire Cover Foam Cushion Set	$9.99
32847	53-58	Trunk & Decklid Hinge Bolts - 6 pc	$15.99
K1246	59-62	Trunk & Decklid Hinge Bolts - 6 pc	$8.99
32849	56-62	Trunk & Decklid Hinge Shims - 6 pc	$14.99
28925	56-60	Trunk & Decklid Hinge Spring Set	$38.99
28926	61-62	Trunk & Decklid Hinge Spring Set	$30.99
35774	56-60	Trunk & Decklid Hinge Towers - pr	$174.99
35783	58	Trunk Floor Access Plates - Steel - pr	$197.99
32908	61-62	Trunk Floor Access Plates and Screws - pr	$18.99
35784	58	Trunk Floor Side Fiberglass Filler Panels - pr	$171.99
25762	61-62	Trunk Latch Lock Mechanism	$35.99
41314	61-62	Trunk Lid Catch Wire - On Lid	$35.99
32907	61-62	Trunk Lid Drain Grommets - In Floor - pr	$5.99
32906	61-62	Trunk Lid Drain Hoses - pr	$6.99
35778	61-62	Trunk Lid Lock Mechanism Bolts - 3 pc	$1.99
32909	61	Trunk Lid Pop-Up Spring & Bumper	$14.99
32910	62	Trunk Lid Pop-Up Spring & Bumper	$12.99
32911	61-62	Trunk Lid Pop-Up Spring Bumper	$3.99
28933	56-60	Trunk Lid Latch Mechanism	$98.99
35775	56-60	Trunk Lid Latch Mount Kit	$5.99
23838	53-58	Trunk Lock	$21.99
23839	59-62	Trunk Lock	$20.99
0200	56-62	Trunk Lock Escutcheon	$9.99
0739	56-62	Trunk Lock Gasket	$1.99
28762	56-62	Trunk Lock Retainer - Correct	$11.99
28756	53-60	Trunk Lock Rod	$8.99
28757	61-62	Trunk Lock Rod	$8.99

1953-1962 TRUNK

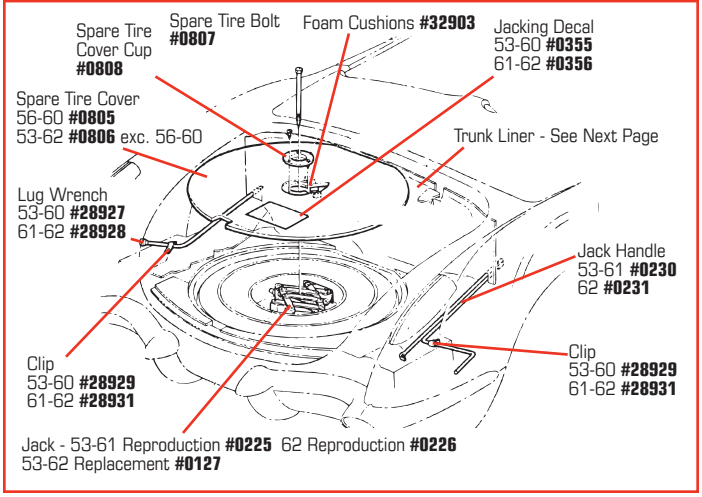

TRUNK LINERS

9026	56-60	Trunk Liner - Red	$50.99
9027	56-60	Trunk Liner - Black	$50.99
9028	61-62	Trunk Liner - Black	$50.99
9029	61-62	Trunk Liner - Red	$50.99
27825	56-57	Trunk Liner - Molded - w/o Power Top *	$152.99
27826	57-60	Trunk Liner - Molded - w/ Power Top *	$152.99
27827	58-60	Trunk Liner - Molded - w/o Power Top - 60E *	$152.99
27828	60	Trunk Liner - Molded - w/o Power Top - 60L *	$152.99
27829	61-62	Trunk Liner - Molded - w/ Power Top *	$152.99
27830	61-62	Trunk Liner w/o Power Top - Correct *	$152.99
32902	56-62	Trunk Liner Mount Brackets - pr	$16.99
27831	59-62	Trunk Liner "S" Clips - 59L - 4 pc	$8.99
35622	56-59	Trunk Liner Screws & Lockwashers	$7.99
K1309	60-62	Trunk Liner Screws - Correct - 10 pc	$2.99

***Available in Black Only.**

TRUNK MATS

43257	56-57	Trunk Mat - Black	$387.99
43256	56-57	Trunk Mat - Red	$397.99
43258	58	Trunk Mat - Black	$387.99
43264	58	Trunk Mat - Blue	$397.99
43259	58	Trunk Mat - Red	$397.99
43260	59	Trunk Mat - Black	$387.99
43265	59	Trunk Mat - Blue	$397.99
43261	59-60	Trunk Mat - Red - 60 E	$397.99
43266	59	Trunk Mat - Turquoise	$397.99
43262	60	Trunk Mat - Black	$387.99
43267	60	Trunk Mat - Blue	$397.99
43263	60	Trunk Mat - Red	$397.99
43268	60	Trunk Mat - Turquoise	$397.99
40266	61-62	Trunk Mat - Black - Exact Reproduction	$417.99
40267	61-62	Trunk Mat - Fawn Beige	$417.99
40268	61-62	Trunk Mat - Jewel Blue	$417.99
40271	61-62	Trunk Mat - Red - Exact Reproduction	$417.99

1961-1962 TRUNK LATCH

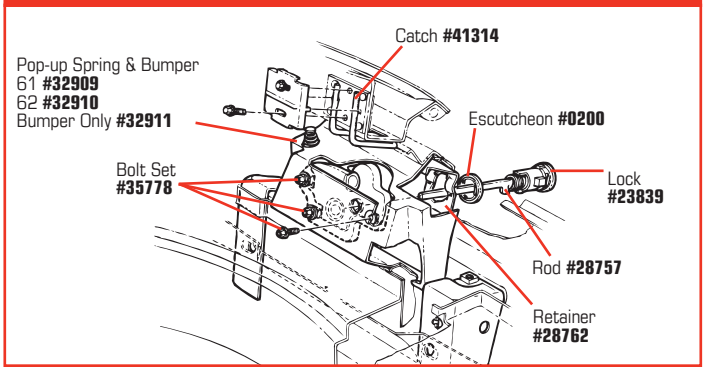

800-458-3475
CorvetteAmerica.com
WARNING: Cancer and Reproductive Harm — www.P65Warnings.ca.gov

1953-1960 TRUNK LATCH

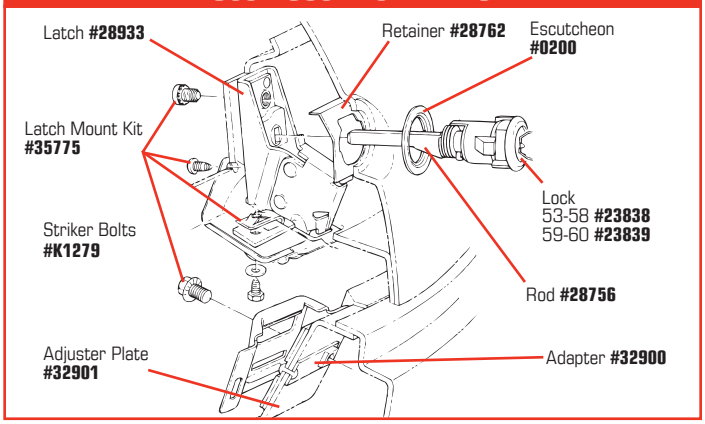

#0127

Jacks

0226	62	Jack - Display Purposes Only	$309.99
0127	53-62	Jack - Replacement - w/ Handle - Larger than Original	$179.99
0230	53-61	Jack Handle	$50.99
0231	62	Jack Handle	$51.99
28929	56-60	Jack Handle & Lug Wrench Clip	$17.99
28931	61-62	Jack Handle & Lug Wrench Clip	$11.99
K1382	56-62	Jack Handle & Lug Wrench Clip Screw Set	$3.99
28932	61-62	Jack Handle Pad Set	$3.99
0355	53-60	Jacking Instruction Decal	$4.99
0356	61-62	Jacking Instruction Decal	$4.99
28927	53-60	Lug Wrench	$57.99
28928	61-62	Lug Wrench	$58.99

Call Today & SAVE on an Interior Package!

Get discounts on Interiors & Parts when you order an Interior Package!

Weatherstrip

1956-62 HARDTOP WEATHERSTRIP

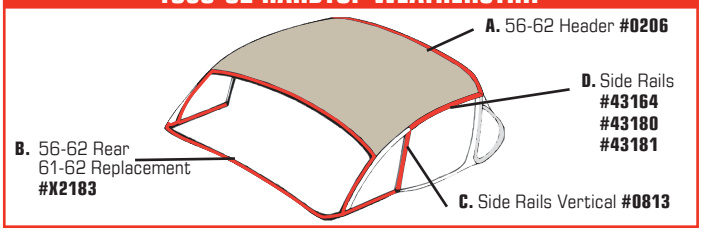

Hardtop Weatherstrip

A. **0206**	56-62	Header	$19.99
B. **X2183**	56-62	Rear - 61- 62 Replacement	$241.99
B. **1335**	61-62	Rear - Correct	$263.99
C. **0813**	56-62	Side Rails - Vertical - pr	$68.99
D. **43164**	56-62	Side Rails - Horizontal - LH & RH - pr	$142.99
D. **43180**	56-62	Side Rails - Horizontal - LH	$71.99
D. **43181**	56-62	Side Rails - Horizontal - RH	$71.99

1956-62 SOFTTOP WEATHERSTRIP

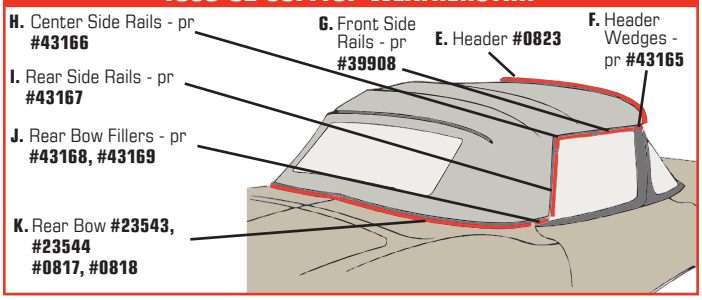

Softtop Weatherstrip

E. **0823**	56-62	Header	$24.99
F. **0824**	56-62	Header Wedge - LH	$4.99
F. **43165**	56-62	Header Wedges - pr	$20.99
G. **39908**	56-62	Front Side Rails - pr	$32.99
H. **43166**	56-62	Center Side Rails - pr	$34.99
I. **43167**	56-62	Rear Side Rails - pr	$30.99
J. **43168**	56-60	Rear Bow Fillers - pr	$54.99
J. **43169**	61-62	Rear Bow Fillers - pr	$54.99
K. **23543**	56-57	Rear Bow - Tan Mohair - 57 E	$42.99
K. **23544**	57-58	Rear Bow - Black Mohair - 57 L	$42.99
K. **0817**	56-60	Rear Bow - 56-58 Replacement	$22.99
K. **0818**	61-62	Rear Bow	$16.99
35785	59-60	Door Weatherstrip Mount Hole Retainers - 54 pc	$13.99
35789	61-62	Door Weatherstrip Mount Hole Retainers - 40 pc	$13.99
35790	56-62	Windshield / Frame Upper Filler	$7.99
35786	59-60	Door Post Weatherstrip Clips, Retainers & Screws - 22 pc set	$39.99
35787	61-62	Door Post Weatherstrip Clips, Retainers & Screws - 62 E - 18 pc set	$34.99
35788	62	Door Post Weatherstrip Clips, Retainers & Screws - 62 L - 22 pc set	$39.99
46842	59-62	Weatherstrip Retainer - Convertible Top Header	$33.99
8359	56-62	Side Rail Retainers - 6 pc	$24.99
K1326	56-62	Side Rail Retainer Screw Set	$17.99
32913	56-58	Softtop Header WS Retainer & Screw Set	$35.99
K1429	56-62	Softtop Header WS Retainer Screw Set	$3.99
K1320	56-62	Softtop Header WS Screw/T-Nut Set	$9.99
34108	61-62	Weatherstrip Retainer Cord - Top Rear Bow	$7.99

WARNING: Cancer and Reproductive Harm — www.P65Warnings.ca.gov

1953-62 BODY WEATHERSTRIP

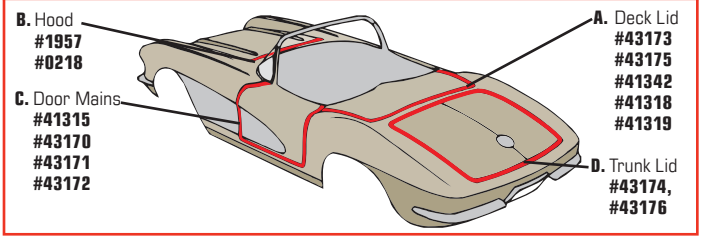

BODY WEATHERSTRIP

A. 43173	53-58	Deck Lid	$13.99
A. 43175	59-62	Deck Lid	$13.99
A. 41342	59-60	Deck Lid - Correct	$15.99
A. 41318	59-60	Deck Lid w/o Molded Ends	$13.99
A. 41319	61-62	Deck Lid w/ Molded Ends - 2 pc	$52.99
B. 1957	53-57	Hood	$10.99
B. 0218	58-62	Hood	$10.99
C. 41315	53-55	Door Main	$13.99
C. 43170	56-58	Door Mains - pr	$71.99
C. 43171	59-60	Door Mains - pr	$91.99
C. 43172	61-62	Door Mains - pr	$114.99
32912	56-58	Door Main WS End Retainer Clips & Screws - pr	$7.99
D. 43174	53-58	Trunk Lid	$18.99
D. 43176	59-62	Trunk Lid - Replacement	$20.99

1953-62 WINDSHIELD WEATHERSTRIP

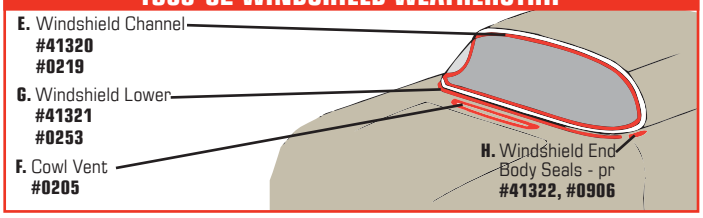

WINDSHIELD WEATHERSTRIP

E. 41320	53-55	Windshield Channel	$45.99
E. 0219	56-62	Windshield Channel	$37.99
35790	56-62	Windshield-to-Frame Upper Filler Weatherstrip - not included in Weatherstrip Kits	$7.99
F. 0205	53-62	Cowl Vent	$9.99
G. 41321	53-55	Windshield Lower	$14.99
G. 0253	56-62	Windshield Lower	$14.99
H. 41322	53-55	Windshield End Body Seals - pr	$5.99
H. 0906	56-62	Windshield End Body Seals - pr	$8.99

1956-62 DRIP RAILS

Note: 1959 was a split year for this weatherstrip. On the early style, the 2 holes for the push-in retainers were both along the bottom edge of the weatherstrip. On the later style, one hole was moved to a position slightly around the corner of the weather strip, as noted in the illustration.

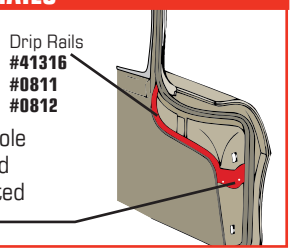

DRIP RAILS

41316	53-55	Drip Rails - pr	$40.99
0811	56-59	Drip Rails - 59E - pr	$43.99
0812	59-62	Drip Rails - 59L - pr	$47.99
K1036	56-62	Door Drip Rail Retainers - 4 pc	$3.99

USA-MADE EPDM* RUBBER

When QUALITY counts... Get the look and feel of original Latex weatherstrip with the superior durability of EPDM Rubber. USA weatherstrip formula has the soft and supple feel of original style latex weatherstrip. Includes a 5 Year Warranty!

- ***EPDM boasts longer life span over original latex weatherstrip.***
- ***Dipped latex finish for superior appearance out of the package.***
- ***Made in America — supports American Workers!***
- ***Includes a 5-Year Replacement Warranty***

BEST CHOICE FOR THE QUALITY DISCERNING CONSUMER.

HARDTOP WEATHERSTRIP KIT

Contains all items shown in Hardtop diagram on page 77.

X2219	56-62	Hardtop Wstrip Kit - Replacement - 6 pc	$468.99
23691	61-62	Hardtop Wstrip Kit - Correct - 6 pc	$478.99

SOFTTOP WEATHERSTRIP KIT

Contains all items found in Softtop diagram on page 77.
Includes 1956-58 Replacement Rear Bow (part #0817).
1956-58 Mohair Rear Bow must be ordered separately.
Side Rail Retainers sold separately.

X2220	59-60	Weatherstrip Kit - 12 pc	$158.99
X2221	61-62	Weatherstrip Kit - 12 pc	$162.99
39915	56-58	Weatherstrip Kit - Conv. Top - 11 pc	$145.99

BODY WEATHERSTRIP KITS

Contains Door Mains (pair), Drip Rails (pair), Decklid, Cowl Vent, Hood and Trunk.

X2222	56-57	Weatherstrip Kit - 8 pc	$147.99
X2223	58	Weatherstrip Kit - 8 pc	$147.99
X2224	59	Weatherstrip Kit - 8 pc - 59E	$157.99
X2225	59-60	Weatherstrip Kit - 8 pc - 59L	$157.99
X2226	61-62	Weatherstrip Kit - 8 pc	$203.99

BODY WEATHERSTRIP KITS

Contains everything in the 8-Piece Kit (above), plus Drip Rail Retainers (4), Windshield Channel, Windshield Lower and Windshield End Body Seals (pair).

X2227	56-57	Weatherstrip Kit - 16 pc	$193.99
X2228	58	Weatherstrip Kit - 16 pc	$193.99
X2229	59	Weatherstrip Kit - 16 pc - 59E	$203.99
X2230	59-60	Weatherstrip Kit - 16 pc - 59L	$203.99
X2231	61-62	Weatherstrip Kit - 16 pc	$234.99

WINDSHIELD WEATHERSTRIP KITS

41323 Contains Windshield Channel and Frame Body pieces.
41324 Contains Windshield Channel, Lower Windshield, and End Body Seals (2).

41323	53-55	Weatherstrip Kit - Windshield	$56.99
41324	56-62	Weatherstrip Kit - Windshield	$56.99

CONVERTIBLE WEATHERSTRIP KITS

39912	56-62	Weatherstrip Kit - Convertible Top Side Rail - 3 pc - Center, Front & Rear	$81.99
3162	58-60	Weatherstrip Body Lock Pillar Conv. - LH	$27.99
3163	58-60	Weatherstrip Body Lock Pillar Conv. - RH	$27.99

800-458-3475
CorvetteAmerica.com
WARNING: Cancer and Reproductive Harm — www.P65Warnings.ca.gov

Body Gasket Kits

Get all the seals you need for your Corvette in one kit! Kit includes Mirror, Windshield End Seals, Washer Nozzles, Wiper Spacer, Lock Cylinder, Door Handles, Courtesy Light Switch, Tail Light Lens, Tail Light Body, Park Lamp Lens, Park Lamp Body, Headlamp to Body, Front & Rear Emblem, License Lens and Deck Lid Locks.

35545	56-57	Body Gasket Kit - 27 pc	$37.99
35546	58-60	Body Gasket Kit - 29 pc	$37.99
35547	61-62	Body Gasket Kit - 30 pc	$37.99

Weatherstrip Adhesive

32914	Weatherstrip Adhesive Black - 5 oz	$13.99
32915	Weatherstrip Adhesive Yellow - 5 oz	$11.99

Weatherstrip Installation Tool Kit

This four-piece kit includes all the tools you need to install your new weatherstrip tightly, securely and correctly.

22605	Weatherstrip Installation Tool Kit - 4 pc	$28.99

Wheels & Hubcaps

#42766 1956-58

#42767 1959-62

Wheels & Hubcaps

41326	53-55	Hubcap Flippers - set of 8	$137.99
0949	56-58	Hubcaps with Spinners - 4 pc set - Import	$754.99
0957	59-62	Hubcaps with Spinners - 4 pc set - Import	$754.99
0973	56-58	Hubcap with Spinner - Import - ea	$188.99
0981	59-62	Hubcap with Spinner - Import - ea	$186.99
41327	56-58	Hubcap with Spinner - US Made - ea	$282.99
41328	59-62	Hubcap with Spinner - US Made - ea	$282.99
0826	56-62	Hubcap Chrome Spinner w/ Hardware	$45.99
25591	56-62	Hubcap Chrome Spinner Set - Includes Spinners, Retainers and Screws	$172.99
25596	56-62	Spinner Hardware Set	$19.99
41657	53-62	Lugnut - ea	$1.99
K1034	56-62	Lugnuts - 20 pc set	$17.99
35793	53-62	Valve Stems - Long - 5 pc set	$11.99
35794	53-62	Valve Stem Caps - Metal - 5 pc set	$7.99

Wheel Sets

Our Wheel Sets include 4 Steel Wheels, 4 Hubcaps w/ Spinners (imported), and 20 Lugnuts.

42766	56-58	Steel Wheel Set	$1199.99
42767	59-62	Steel Wheel Set	$1199.99
41329	56-62	Steel Wheel - 15" x 5"	$132.99

Washer, Windshield & Wipers

Washer

35815	56-57	Washer Hose Set	$44.99
28945	58-62	Washer Hose Set - Ribbed, Carbureted	$21.99
28946	58-61	Washer Hose Set - Ribbed, FI	$21.99
28938	56-62	Washer Hose Firewall Grommet	$12.99
46829	56-60	Washer Hose Tie Strap Brass - 4pc	$21.99
0831	53-62	Washer Nozzles - pr	$23.99
0832	53-62	Washer Nozzle	$16.99
35799	53-62	Washer Nozzle Flat Retaining Nuts - pr	$14.99
35798	53-62	Washer Nozzle Gaskets - pr	$2.99
28941	58-62	Washer Bottle Bracket - Exc. FI	$57.99
28942	58-62	Washer Bottle Bracket - FI	$59.99
41341	53-55	Washer Hose Firewall Grommet	$4.99
X2107	57-62	Washer Bottle w/o Lid	$30.99
X2116	58-59	Washer Bottle Lid - Blue (59E)	$78.99
X2117	59-62	Washer Bottle Lid - Gray (59L)	$81.99
35814	58-62	Washer Pump Rebuild Kit	$81.99
25592	59-62	Washer Switch Actuator Assembly	$11.99

1956-1962 WASHER RESERVOIR

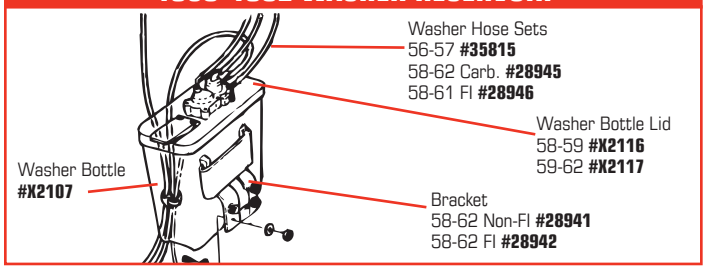

Windshield

22200	53-55	Windshield - Clear (Additonal Shipping Charge)	$325.99
22202	56-62	Windshield - Clear (Additonal Shipping Charge)	$407.99
30410	56-61	Windshield Lower Channel	$463.99
30411	62	Windshield Lower Channel	$463.99
30412	56-62	Windshield Upper Channel	$381.99
30413	56-62	Windshield Upper w/ Visor Holes - Stainless	$463.99
30414	56-62	Windshield Upper w/o Visor Holes Stainless	$463.99
30415	56-62	Windshield Lower Stainless Steel	$463.99
30425	56-61	Windshield Frame Assembly w/Glass	$3186.99
30426	56-61	Windshield Frame Assembly w/Glass w/ Visor Holes	$3186.99
30427	62	Windshield Frame Assembly w/Glass	$3365.99
41331	56-62	Windshield Frame - Upper - Nut Plates - pr	$26.99
41332	56-62	Windshield Frame - Lower - Nut Plates - pr	$21.99
41333	56-62	Windshield Frame - Lower - Body T-Bolt & Nut Set - 8 pc	$27.99
K1062	56-62	Windshield Frame Screw Set - 12 pc	$6.99

WARNING: Cancer and Reproductive Harm — www.P65Warnings.ca.gov

1953-1962 WIPERS & WASHERS

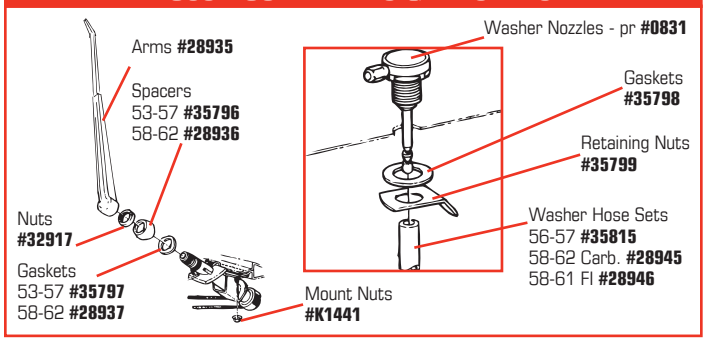

1953-1956 WIPER MOTOR

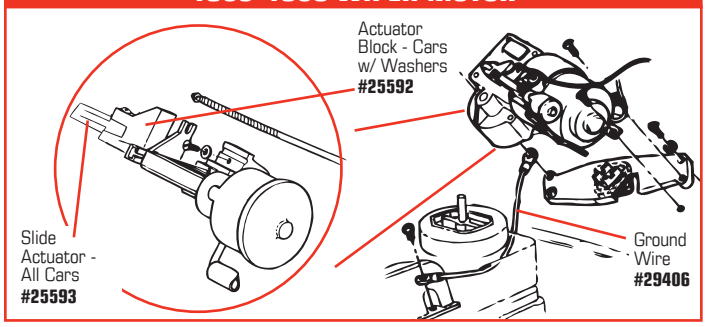

WIPERS

28947	58-61	Vacuum Cannister w/ Valve - 61E	$193.99
28948	61-62	Vacuum Cannister w/ Valve - 61L - 62	$193.99
28935	56-62	Wiper Arms - pr	$107.99
35796	53-57	Wiper Arm Chrome Spacers - pr	$57.99
28936	58-62	Wiper Arm Chrome Spacers - pr	$58.99
35797	53-57	Wiper Arm Chrome Spacer Gaskets - pr	$3.99
28937	58-62	Wiper Arm Chrome Spacer Gaskets - pr	$2.99
35300	53-62	Wiper Arm Removal Tool	$7.99
32917	53-62	Wiper Arm Transmission Nuts - pr	$12.99
35801	53-62	Wiper Arm Transmission Nut Wrench	$12.99
28934	56-62	Wiper Blade - Correct - pr	$89.99
41335	56-62	Wiper Blade Refills - Correct - pr	$34.99
28651	58-62	Wiper Control Switch w/ SS Cable	$101.99
27420	58-60	Wiper Knob w/o Windshield Washer	$30.99
27421	58-60	Wiper Knob w/ Windshield Washer	$44.99
28656	61-62	Wiper Knob w/ Windshield Washer Button	$44.99
41339	53-56	Wiper Motor to Washer Cable - Foot OP exc.54	$217.99
41340	57	Wiper Motor to Washer Cable - Foot OP	$217.99
35807	57	Wiper Motor Cover Plate - 57L - #5047991	$35.99
29406	55-62	Wiper Motor Ground Wire	$13.99
K1372	56-62	Wiper Motor Mount Plate Screws - 6 pc	$3.99
35803	53-62	Wiper Motor to Wiper Plate Insulator	$6.99
35804	56-62	Wiper Motor Plate to Firewall Seal	$4.99
25831	55-57	Wiper Motor Power Lead	$13.99
25832	58-62	Wiper Motor Power Lead	$13.99
25593	57-62	Wiper Switch Actuator Assembly	$7.99
27422	58-60	Wiper Switch Nut	$11.99
27423	61-62	Wiper Switch Nut	$11.99
35067	58-62	Wiper Switch Nut Wrench	$13.99
K1441	56-62	Wiper Transmission Mount Nuts - 4 pc	$2.99

Product photos, descriptions and diagrams at:

www.CorvetteAmerica.com

WIRING

DASH & FORWARD LAMP HARNESSES

29215	53-55	Dash & Forward Lamp Harness - 6 Volt	$506.99
29216	55	Dash & Forward Lamp Harness - 12 Volt	$457.99
29217	56-57	Dash & Forward Lamp Harness	$457.99
29219	58-61	Dash & Forward Lamp Harness	$457.99
29220	62	Dash & Forward Lamp Harness	$457.99

ENGINE HARNESSES

29270	53-55	Engine Harness - 6 Volt	$97.99
29271	55	Engine Harness - 12 Volt Auto	$97.99
32415	55	Engine Harness - 12 Volt Manual	$97.99
32416	56	Engine Harness - Auto	$97.99
32417	56	Engine Harness - Manual	$97.99
29272	57	Engine Harness - Auto	$97.99
29273	57	Engine Harness - Manual	$97.99
29274	57	Engine Harness - FI Auto	$97.99
29275	57	Engine Harness - FI Manual	$97.99
29323	57	Engine Harness - Auto 2nd Design	$97.99
29324	57	Engine Harness - Manual 2nd Design	$97.99
29276	58-61	Engine Harness - Auto	$97.99
29277	58-62	Engine Harness - Manual	$97.99
29278	62	Engine Harness - Auto	$97.99
35459	53-62	Engine Compartment Wire Harness Clips & Screws - 20 pc	$48.99

GROUND STRAP & WIRE

22077	58	Blower Motor Ground Wire	$13.99
22078	59-62	Blower Motor Ground Wire	$13.99
22076	53-54	Cigarette Lighter Ground Wire	$13.99
22101	58-62	Distributor Base To Point Plate Ground Wire	$9.99
29389	55-60	Ground Strap Kit. w/o Power Top	$33.99
29390	61-62	Ground Strap Kit w/o Power Top	$33.99
29391	56-62	Ground Strap w/ Power Top - use with #29390	$23.99
51298	56	Ground Wire - Power Top	$13.99
29405	55-57	Ground Wire - Cigarette Lighter	$13.99
32426	58-62	Ground Wire - Radio to Valve Cover	$13.99
29406	55-62	Ground Wire - Wiper Motor	$13.99

HEADLIGHT HARNESSES

0854	53-55	Headlight Bucket Extension Harness - 6 cyl - pr	$23.99
29415	55-57	Headlight Bucket Extension Harness - pr	$63.99
29416	58-62	Headlight Bucket Extension Harness - pr	$63.99
35631	58-62	Headlight Wiring Harness Connector Clips on Nose Panel - 4 pc	$18.99

HEATER EXTENSION WIRES

32429	53-54	Heater Extension Wire	$33.99
29445	55-57	Heater Extension Wire - Heater Switch to Heater Blower Motor Extension	$33.99

800-458-3475
CorvetteAmerica.com

WARNING: Cancer and Reproductive Harm — www.P65Warnings.ca.gov

#29215

Power Top Harnesses

32449	56	Power Top Harness - Main 1st Design	$154.99
32444	56	Power Top Harness - Main 2nd Design	$154.99
29530	57	Power Top Harness - Main	$154.99
29531	58-62	Power Top Harness - Main	$154.99
32445	56	Power Top Limit Switch Harness - for cover limit switch	$84.99
29535	57-62	Power Top Limit Switch Harness - for cover limit switch	$78.99
32446	56	Power Top Limit Switch Harness - for top limit switch	$78.99
29536	57-62	Power Top Limit Switch Harness - for top limit switch	$78.99
29540	56-62	Power Top Main Feed Wire - starter motor to circuit breaker	$15.99

Power Window Harnesses

29172	56-57	Power Window Motor Adapter - T Pattern	$15.99
29184	56-57	Power Window Motor Adapter - Parallel Pattern	$15.99
29545	56-57	Power Window Harness - Complete	$158.99
29546	58	Power Window Harness - Complete	$158.99
29547	59-62	Power Window Harness - Complete	$158.99
37289	53-62	Repair Pigtail for Power Window Switch	$19.99

Rear Lamp Harnesses

29575	53-55	Rear Lamp Harness - 6 Volt	$126.99
29576	55	Rear Lamp Harness - 12 Volt V-8	$126.99
29577	56-57	Rear Lamp Harness - All	$114.99
29578	58-60	Rear Lamp Harness - All	$114.99
29579	61-62	Rear Lamp Harness - All	$126.99
29636	53-62	Repair Pigtail, Tail & Brake Lamp Plug	$14.99

Park Lamp Extension

29442	53-55	Front Park Lamp Extension - 2 pc set	$114.99
29443	55-57	Front Park Lamp Extension - 2 pc set	$114.99
35638	58-62	Park Light Sockets w/ Wire	$57.99

Miscellaneous Wiring

32402	58-61	Choke Wire, FI Cold Enrichment	$19.99
29160	62	Choke Wire, FI Cold Enrichment	$19.99
22074	53-55	Cigarette Lighter Harness Power Lead Wire	$13.99
32403	53-54	Cigarette Lighter Lamp Assembly w/ Shield	$19.99
32404	53-62	Cigarette Lighter Lamp Shield	$17.99
29170	58-61	Clock Harness, Instrument Panel Clock	$21.99
22075	55	Coil to Coaxial Condenser Leadwire	$29.99
29175	58-62	Coil Wire, Resistor to Coil	$13.99
29195	56-57	Courtesy Lamp Extension Wires - 4 pc set	$19.99
32407	58-62	Courtesy Lamp Harness	$19.99
32413	53-54	Emergency Brake Flasher Leads - Flasher & Fuse Panel to Lamp	$19.99
32414	55-57	Emergency Brake Flasher Leads - Flasher & Fuse Panel to Lamp	$19.99
3873	53-62	Horn Wire Lead Harness	$14.99
32432	53-55	License Light Sockets & Leads - 2 pc set - 6 cyl.	$27.99
32433	55	License Light Sockets & Leads - 2 pc set - V8	$27.99
32431	56-57	License Plate Lamp Sockets - 2 pc set	$27.99
29470	58-60	License Plate Lamp Sockets - 2 pc set	$27.99
25782	61-62	License Plate Light Bulb Socket	$12.99
32438	53-54	Neutral Safety Switch Extension - switch to starter motor relay	$13.99
29485	55-61	Neutral Safety Switch Extension - switch to starter motor relay	$13.99
29500	58-60	Parking Brake Warning Harness - flasher to switch and fuse panel	$19.99
29502	61-62	Parking Brake Warning Harness - includes warning lamp assembly	$19.99
32451	53-54	Radio Power Lead	$21.99
32452	55-57	Radio Power Lead	$21.99
51537	55-62	Radio Capacitor - Voltage Regulator	$20.99
51538	55-62	Radio Capacitor - Generator	$20.99
51539	56-59	Radio Capacitor - Ignition Coil 1st Design	$20.99
51540	59-62	Radio Capacitor - Ignition Coil 2nd Design	$20.99
32459	58-59	Regulator to Generator Harness	$42.99
0234	60-62	Regulator to Generator Harness	$42.99
32462	58-62	Speaker Harness - Front	$14.99
35816	57-62	Temperature Sending Unit Wire Insulation, Terminal & Connector	$4.99
25799	55-62	Turn Signal Flasher - 12 Volt - Replacement	$8.99
29218	53-55	Turn Signal Flasher Power Lead	$13.99

Light Bulb Kits

32918	55-57	Light Bulb Kits - 19 pc	$18.99
32919	58-59	Light Bulb Kits - 17 pc	$17.99
32920	60	Light Bulb Kits - 17 pc	$18.99
32921	61-62	Light Bulb Kits - 18 pc	$18.99

Fuse & Flasher Kits

32922	55-57	Fuse & Flasher Kit - 11 pc	$13.99
32923	58-62	Fuse & Flasher Kit - 14 pc	$13.99
40378	58-62	Fuse Block Repair Kit	$126.99
22114	53-55	Fuse & Flasher Kit - 6 Cylinder - 6 pc	$11.99
22115	58-62	Fuse & Flasher Kit - 10 pc	$14.99

Tie Strap Kits

0080	53-57	Tie Strap Kit	$34.99
0081	58-60	Tie Strap Kit	$36.99
27429	56-62	Underdash Wire Harness Clip Set	$17.99

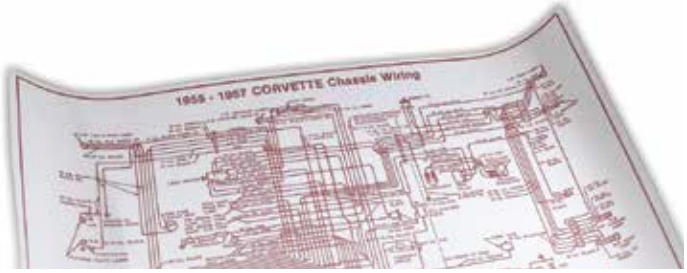

Laminated Wiring Diagrams

These laminated Wiring Diagrams illustrate complete, detailed wiring information for your Corvette. The diagrams are illustrated on an easy-to-read 17" x 22" format. They're laminated so they're easy to keep clean and they'll stand up to repeated use in the shop.

490053	53-54	**490058**	58-60
490055	55-57	**490061**	61-62

Wiring Diagram - Laminated $14.99

WARNING: Cancer and Reproductive Harm — www.P65Warnings.ca.gov

Interior Products by Corvette America

Made in the U.S.A.

1963-1967 INTERIORS

1964 Leather Seat Covers in a restored "barn find" convertible.

CORVETTE AMERICA PREFERRED supplier of INTERIORS

We are the Preferred Supplier of interiors throughout the Corvette Industry. Our products are available from all major Corvette parts companies & your local dealer.

1963-1967 Seat Covers

Available in Original Vinyl or Premium Leather!
Corvette America 1963-67 Seat Covers are sold in complete sets, including two backs and two bottoms. Individual pieces are also available, call for details. **Add your 2-digit Color Code to each part number.**

4454_	63	Vinyl Seat Covers - pr	$429.99
4455_	64	Vinyl Seat Covers - pr	$429.99
4173_	65	Vinyl Seat Covers - pr	$449.99
4174_	66	Vinyl Seat Covers - pr	$449.99
4175_	67	Vinyl Seat Covers - pr	$549.99
4183_	63	Leather Seat Covers - pr	$729.99
4184_	64	Leather Seat Covers - pr	$729.99
4185_	65	Leather Seat Covers - pr	$729.99
4186_	66	Leather Seat Covers - pr	$729.99
4187_	67	Leather Seat Covers - pr	$769.99

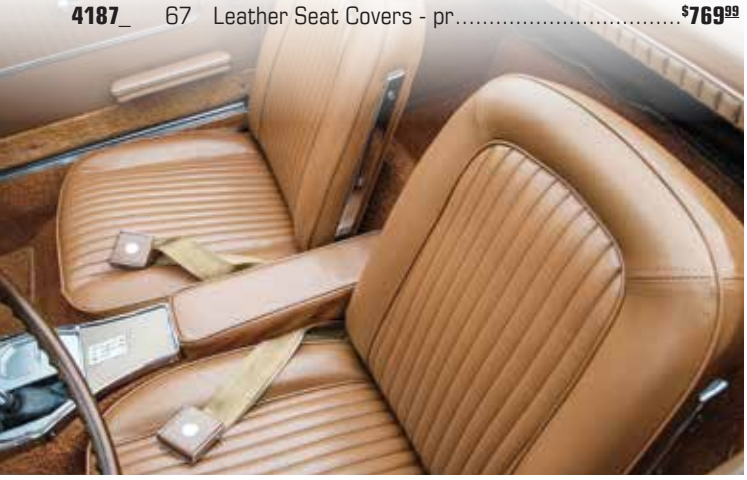

Use Your COLOR CODE When You Order!

Once you know your 2-digit Interior Color Code, ordering any Corvette America interior product is easy. All part numbers for interior items, where multiple colors are available, consist of a part number followed by a blank space for the Color Code.

Select all the items you want to order and add your 2-digit Color Code to each part number.

1963-1967 Color Codes

63-67 Black **Code 20**	65-67 Bright Blue **Code 40**	63-64 Dark Blue **Code 42**	66 Dark Blue **Code 44**	65-67 Green **Code 14**
65-67 Red **Code 30**	63-64 Saddle **Code 54**	65-66 Saddle **Code 52**	67 Saddle **Code 53**	64-66 Silver **Code 61**
65 Maroon **Code 37**	63-64 Red **Code 35**	67 Teal **Code 49**	64-67 White **Code 65**	

800-458-3475
CorvetteAmerica.com

WARNING: Cancer and Reproductive Harm — www.P65Warnings.ca.gov

1963 Leather
Seat Covers

1966 Vinyl
Seat Covers

Corvette America's INTERIOR Package THE ORIGINAL®

Call Today & SAVE on a NEW Interior Package!

Get discounts on Interiors & Parts when you order an Interior Package!

1964 Vinyl
Seat Covers

1967 Leather
Seat Covers

MADE BY Corvette America

1965 Leather
Seat Covers

MADE IN THE USA

1965-1967 Seat Covers

The Best Fitting Covers Available!

- Increased pleat depth & definition.
- Heavier backing material.
- Seat foam re-tooled to match & gain more contour.
- Combine with our Seat Foam for the Best Fit!

WARNING: Cancer and Reproductive Harm — www.P65Warnings.ca.gov

Serving the Corvette Community Since 1977.

1967 Deluxe Seat Back *1965-66 Deluxe Seat Back* *1967 Standard Seat Back* *1965-66 Standard Seat Back*

1965-1967 Seat Backs

Ready to install. Deluxe Seat Backs feature a pre-installed Seat Back Vent and Upper Trim Strip. Standard Seat Backs feature a pre-installed Seat Back Vent only. Vents and Upper Trim Strips also available separately.

4496_	65-66	Deluxe Seat Back - ea	$90.99
4497_	67	Deluxe Seat Back - ea	$90.99
4235_	65-66	Standard Seat Back - ea	$70.99
4236_	67	Standard Seat Back - ea	$70.99
3523	65-67	Seat Back Vent	$4.99
1417	65-67	Seat Back Upper Trim Strip	$31.99

1963 Seat Foam *1966 Seat Foam*

Seat Foam

Our Seat Foam features the correct feel, density & size.
Each Set contains two backs & two bottoms.

25463	63	Seat Foam - 4 pc	$229.99
25464	64	Seat Foam - 4 pc	$229.99
7354	65	Seat Foam - 4 pc	$229.99
7355	66	Seat Foam - 4 pc	$229.99
7356	67	Seat Foam - 4 pc	$229.99
7366	63-64	Seat Foam - Bottom	$67.99
7367	63	Seat Foam - Back	$67.99
7368	64	Seat Foam - Back	$67.99
7369	65	Seat Foam - Bottom	$67.99
7370	65	Seat Foam - Back	$67.99
7371	66	Seat Foam - Bottom	$67.99
7372	66	Seat Foam - Back	$67.99
7373	67	Seat Foam - Bottom	$67.99
7374	67	Seat Foam - Back	$67.99

We've improved our Seat Foam to match & gain more contour. For the Best Fit use Corvette America Covers & Seat Foam together.

#39917
20 pc. Hardware Set - Screws, Bolts & Spacers

#X35823
1963-66 Side Seat Chrome Set

Side Seat Chrome Sets

Sold in 4-piece sets. Mounting hardware sold separately.

52106	63-64	Side Seat Chrome Set - USA - 4 pc	$258.99
X35823	63-66	Side Seat Chrome Set - Import - 4 pc	$184.99
52108	67	Side Seat Chrome Set - USA - 4 pc	$258.99
X35824	67	Side Seat Chrome Set - Import - 4 pc	$184.99
39917	63-67	Hardware Set - Screws, Bolts & Spacers - 20 pc	$24.99
1816	63-67	Screw Set - 12 pc	$6.99

Corrugated Seat Wire Kits

Accurate reproductions of the original design, our seat wire kits hold your seat cover seams down and keep the loop wires in a fixed position so they don't rub through your covers. All wires needed for a two-seat installation are in one kit.

41741	63-64	Corrugated Seat Wire - 6 pc	$29.99
41742	65	Corrugated Seat Wire - 4 pc	$41.99
41743	66	Corrugated Seat Wire - 4 pc	$30.99
41744	67	Corrugated Seat Wire - 2 pc	$19.99

800-458-3475
CorvetteAmerica.com

WARNING: Cancer and Reproductive Harm — www.P65Warnings.ca.gov

#4900 Pro Model Hog Ring Pliers

#X2082 1963-64 Seat Cover Installation Kit

Seat Cover Burlap

Why thread wires when you don't have to? Our pre-assembled Seat Cover Burlap comes ready to install!

X2034 63-67 Seat Cover Burlap - 4 pc set - Assembled $95.99
33251 63-67 Seat Cover Burlap & Wires - Unassembled $27.99
90306 63-67 Seat Burlap Installation Service $99.99

Seat Cover Installation Kits

All the hooks, clips, straight wires & hog rings needed to install your seat covers.

X2082 63-64 Seat Cover Installation Kit $30.99
X2083 65 Seat Cover Installation Kit $30.99
X2084 66 Seat Cover Installation Kit $30.99
X2085 67 Seat Cover Installation Kit $30.99

Hog Rings & Pliers

A typical set of 1963-67 seats need 40 hog rings for installation.
Note: Hog rings are included in Seat Cover Installation Kits.

4930 Hog Rings - 10 pack $2.99
4904 Hog Ring Pliers - Economy $6.99
4902 Hog Ring Pliers - Spring-Loaded $21.99
4900 Hog Ring Pliers - Pro Model $26.99

Seat Cover Clip Installation Tool

Used to pull clips through foam.

8814 Seat Cover Clip Install Tool $11.99

Seat Frame Components

52128 63-64 Seat Frame Spike Strip $9.99
0008 63-67 Seat Frame Spring $7.99

Seat Frame Reconditioning Service

We use a professional sandblasting process to remove all rust & dirt from your seat frames. We repaint them so they look good as new. We can also replace any necessary parts for an additional charge.

90300 63-67 Seat Frame Reconditioning $209.99

Corvette America's Seat Cover Installation

Seat Cover Installation

Let Corvette America take the hassle out of recovering your worn & dirty seats! Simply send your seats to us, & we'll do the rest. Since we manufacture what we sell, our installation experts will ensure that your new seat covers are installed correctly. **The workmanship is guaranteed for a full year!** Typical turn around time is 2-3 weeks but could vary depending on volume. Seat covers, foam & any necessary hardware must be purchased separately.

15002 63-67 Seat Cover Installation Service $599.99

FREE Installation Videos!

1963-64
Seat cover installation video
34 minute video

1965-67
Seat cover installation video
26 minute video

Watch our library of installation videos FREE on CorvetteAmerica.com

Gift Certificates

*Delivered **FREE** via First-Class Mail.*
A Great Gift for any Corvette Enthusiast!

GC025 $25 Certificate $25
GC050 $50 Certificate $50
GC100 $100 Certificate $100
GC200 $200 Certificate $200
GC300 $300 Certificate $300
GC400 $400 Certificate $400
GC500 $500 Certificate $500

Gift Certificates are Non-Transferable and Non-Refundable.

WARNING: Cancer and Reproductive Harm — www.P65Warnings.ca.gov

#X2503 1964-66 Seat Adjustment Handle - Correct

#1817 1967 Seat Back Lock Lever

#34753 1963 Seat Adjuster Handle

Seat Hardware

37277	64-66	Seat Adjuster Brkt - Rear - LH Outer / RH Inner	$23.99
37278	64-66	Seat Adjuster Brkt - Rear - RH Outer / LH Inner	$23.99
37279	67	Seat Adjuster Brkt - Rear - LH Outer / RH Inner	$23.99
37280	67	Seat Adjuster Brkt - Rear - RH Outer / LH Inner	$23.99
37281	67	Seat Adjuster Bracket - Front	$23.99
34753	63	Seat Adjuster Handle	$45.99
25837	67	Seat Adjuster Knobs - Plastic - pr	$16.99
52146	67	Seat Adjuster Knobs - Chrome - Metal - pr	$22.99
X2503	64-66	Seat Adjustment Handle - Correct	$25.99
28434	63	Seat Adjustment Handle Return Spring - 6 pc	$22.99
28435	64-66	Seat Adjustment Handle Return Spring - 4 pc	$22.99
28436	67	Seat Adjustment Handle Return Spring - 2 pc	$10.99
26100	63-66	Seat Back Adjuster Screw	$1.99
3066	63-64	Seat Back Cardboard	$11.99
34762	67	Seat Back Crank Rod	$8.99
34760	67	Seat Back Latch Fork	$20.99
34761	67	Seat Back Catch Lever	$7.99
34763	67	Seat Back Lever Crank	$23.99
1818	67	Seat Back Lever Washers - pr	$5.99
1817	67	Seat Back Lock Lever	$25.99
34765	67	Seat Back Release Lever Anti-Rattle Spring	$5.99
2460	63	Seat Belt Bolt Kit	$12.99
34776	63	Seat Belt Corner Reinforcements - 4 pc	$106.99
34777	64	Seat Belt Corner Reinforcements - 4 pc	$106.99
34778	65-67	Seat Belt Corner Reinforcements - 4 pc	$106.99
34769	67	Seat Bottom Catch	$26.99
K1324	67	Seat Bottom Catch Screws - 4 pc	$2.99
34771	67	Seat Bottom Catch Nut Plate	$7.99
24574	63-66	Seat Bumper - Lower, Plastic - 4 pc	$7.99
K1081	63-67	Seat Bumper Screws - 4 pc	$2.99
42340	67	Seat Bumpers - Plastic & Metal - 4 pc	$19.99
1291	63-67	Seat Cover Retainer Clips	$1.99
0008	63-67	Seat Frame Spring	$7.99
33254	63-67	Seat Frame Spring Bending Tools - pr.	$70.99
33253	63-67	Seat Frame Spring Clip Pliers	$78.99
33252	63-67	Seat Frame Spring Clips - 30 pc	$8.99
34764	67	Seat Handle Crank Retainer Clip	$5.99
34766	67	Seat Latch Lever Pivot Screw	$10.99
34767	67	Seat Latch Lever Spring	$5.99
34768	67	Seat Latch Fork Spring	$5.99
1413	63-66	Seat Mount Brackets - Rear - 4 pc	$19.99
K1446	67	Seat Mounting Bolts - 8 pc	$7.99
34758	63-66	Seat Mounting Nut Plate - Rear	$12.99
34759	67	Seat Mounting Nut Plate - Rear	$12.99
34757	63-66	Seat Mounting Plate	$6.99
49420	67	Seat Mounting Plate	$11.99
K1447	63-66	Seat Mounting Screws - 12 pc	$11.99
K1446	67	Seat Mounting Screws - 8 pc	$7.99
37282	64-67	Seat Mount Shim	$1.99
34775	63-67	Seat Nut Plate Rivets - 12 pc	$1.99
34772	63	Seat Nut Plate - Underbody Front	$34.99
34773	64-66	Seat Nut Plate - Underbody Front	$34.99
34774	67	Seat Nut Plate - Underbody Front	$34.99
X2062	63-67	Seat Pivot Bolt - ea	$2.99
X2234	63-67	Seat Pivot Spacer - 4 pc	$3.99
K1216	63-67	Seat Pivot Bolt Nuts - 4 pc	$1.99
42347	64-66	Seat Track Release Rivets - pr	$16.99
28432	64-66	Seat Track - LH	$157.99
28433	64-66	Seat Track - RH	$157.99
45066	67	Seat Track - LH	$130.99
45067	67	Seat Track - RH w/ Release Lever	$147.99
42349	67	Seat Track Bushings - Plastic - 16 pc	$53.99
42351	63	Seat Track Height Adjustment Mount Screws	$6.99
42348	67	Seat Track Mounting Brackets - 8 pc	$160.99
42352	63	Seat Track Pinchwelts - 4 pc	$8.99
37275	67	Seat Track Roller Wheel - 8 required	$4.99
37276	67	Seat Track Screws & Lockwashers - 16 pc	$8.99
37274	63-66	Seat Track Spring Bushings - SS - 8 pc	$16.99
X35823	63-66	Side Seat Chrome - Import - 4 pc	$184.99
X35824	67	Side Seat Chrome - Import - 4 pc	$184.99
39917	63-67	Side Seat Chrome Hardware - 20 pc	$24.99
1816	63-67	Side Seat Chrome Screws - 12 pc	$6.99

1963-67 SEAT ASSEMBLY & INSTALLATION

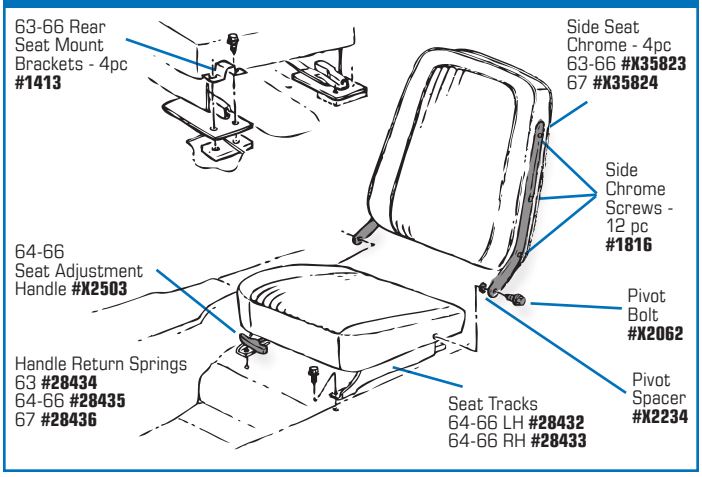

1967 SEAT HARDWARE

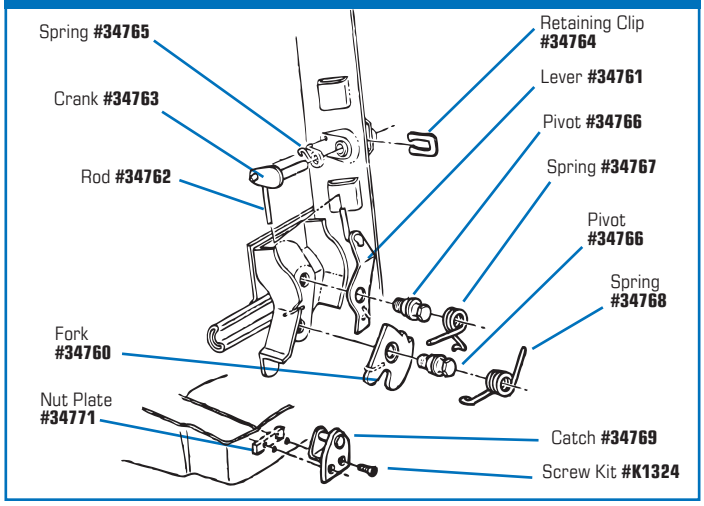

800-458-3475
CorvetteAmerica.com

WARNING: Cancer and Reproductive Harm — www.P65Warnings.ca.gov

#1958 1963
OE Syle Seat Belts

#41559 1966L-67
OE Retractable Seat Belts

#41601 1964-66E
OE D-Buckle Seat Belts

#41551 1965-66
Bowtie Latch Seat Belts

#43896
1963-67
Chrome Lift
Seat Belts

Original D-Buckle Style

Replacement Style

Seat Belt Sets

Our Seat Belt Sets contain Driver and Passenger Belts. The webbing is the correct length, but the number of bands may differ from the original number in some 1963 Corvettes. Chrome buckle with metal-to-metal contact. Satin Lift Latch Buckle, no Emblem. OE 63 webbing Meets SAE J386 and FMV SS 209/302 specs.

1958 63 Seat Belt Set - Black - OE Style Lift **$129.99**
1959 63 Seat Belt Set - Red - OE Style Lift **$129.99**
1961 63 Seat Belt Set - Dark Blue - OE Style Lift **$129.99**
1962 63 Seat Belt Set - Saddle - OE Style Lift **$129.99**

OE Retractable Seat Belts

These aftermarket GM Buckles feature 3 Panel webbing. 1966 Late with GM Logo Push Button. Meets SAE J386 and FMV SS 209/302 specs.

41558 66L-67 OE Retractable Seat Belts - Lap - Black **$359.99**
41559 66L-67 OE Retractable Seat Belts - Lap - Red **$359.99**
41560 66L-67 OE Retractable Seat Belts - Lap - Silver **$359.99**
41561 66L-67 OE Retractable Seat Belts - Lap - Saddle **$359.99**
41562 66L-67 OE Retractable Seat Belts - Lap - Bright Blue.. **$359.99**
41563 66L-67 OE Retractable Seat Belts - Lap - White* **$359.99**
NOTE: * 7 panel webbing

Chrome Lift Replacement Buckle Seat Belts

Non-retractable Lap Belts feature a chrome lift-top buckle and gold chromate-colored mounting ends. These replacement Belts are approximately 60 inches long with pull-through length adjustability on the buckle end. Sold as car sets only. Bolt Kits & Webbing Retractors sold separately. Color selection limited. May not match original colors Meets SAE J386 and FMV SS 209/302 specs.

43890 63-67 Chrome Lift Buckle Seat Belts - Black - pr **$48.99**
43894 63-67 Chrome Lift Buckle Seat Belts - Silver - pr **$48.99**
43891 63-67 Chrome Lift Buckle Seat Belts - Dk Blue - pr **$48.99**
43896 63-67 Chrome Lift Buckle Seat Belts - Saddle - pr **$48.99**
43893 63-67 Chrome Lift Buckle Seat Belts - Maroon - pr **$48.99**
43897 63-67 Chrome Lift Buckle Seat Belts - Red - pr **$48.99**

Discounts & Coupons Emailed!

Enter your email address on CorvetteAmerica.com

Bowtie Lift Latch Seat Belts

Replacement Style Buckle or Original D-Buckle style, including correct style webbing. 1964-66 Early have the Retractor in the center. 1966 Late Belts have the retractor in the base. Meets SAE J386 and FMV SS 209/302 specs.

3 Panel Webbing - Includes Bowtie Latch

37410 64 Seat Belt - Black - 3 Panel Web **$149.99**
37411 64 Seat Belt - White - 3 Panel Web **$149.99**
37412 64 Seat Belt - Silver - 3 Panel Web **$149.99**
37413 64 Seat Belt - Saddle - 3 Panel Web **$149.99**
37415 64 Seat Belt - Red - 3 Panel Web **$149.99**
37418 64 Seat Belt - Dk Blue - 3 Panel Web **$149.99**
41550 64-66 Seat Belt Bracket - Narrow **$24.99**

3 Panel Webbing w/ D-style Buckle - Includes Bowtie Latch

37473 64 Seat Belt - Black - 3 Panel - D-style Buckle **$329.99**
37474 64 Seat Belt - Red - 3 Panel - D-style Buckle **$329.99**
37475 64 Seat Belt - Silver - 3 Panel - D-style Buckle **$329.99**
37476 64 Seat Belt - Saddle - 3 Panel - D-style Buckle **$329.99**
37478 64 Seat Belt - White* - 3 Panel - D-style Buckle ... **$329.99**
37481 64 Seat Belt - Dk Blue - 3 Panel - D-style Buckle ... **$329.99**

3 Panel Web w/D-Latch w/Boot & Winder - Includes Bowtie Latch

41594 64-66E Seat Belt - Black - OE D-Buckle **$379.99**
41595 64-66E Seat Belt - Red - OE D-Buckle **$379.99**
41596 64-66E Seat Belt - Silver - OE D-Buckle **$379.99**
41597 64-66E Seat Belt - Saddle - OE D-Buckle **$379.99**
41598 64-66E Seat Belt - Bright Blue - OE D-Buckle **$379.99**
41599 64-66E Seat Belt - White* - OE D-Buckle **$379.99**
41600 64-66E Seat Belt - Green - OE D-Buckle **$379.99**
41601 64-66E Seat Belt - Maroon - OE D-Buckle **$379.99**
41602 64-66E Seat Belt - Dk Blue - OE D-Buckle **$379.99**

3 Panel Webbing - w/ Boot & Winder - Includes Bowtie Latch

41551 65-66E Seat Belt - Black **$249.99**
41552 65-66E Seat Belt - Red **$249.99**
41553 65-66E Seat Belt - Silver **$249.99**
41554 65-66E Seat Belt - Saddle **$249.99**
41555 65-66E Seat Belt - Bright Blue **$249.99**
41556 65-66E Seat Belt - White* **$249.99**
41557 65-66E Seat Belt - Green **$249.99**
NOTE: * 7 panel webbing

WARNING: Cancer and Reproductive Harm — www.P65Warnings.ca.gov

Seat Belt Hardware

40492	63	Seat Belt Anchor - Interior	$19.99
40493	64-66	Seat Belt Anchor - Interior Chrome	$19.99
2466	63	Seat Belt Bolt Kit - either Driver or Passenger	$24.99
2467	64-67	Seat Belt Bolt Kit - either Driver or Passenger	$24.99
34842	63-67	Seat Belt Bolt Kit - Gold - 2 req'd	$11.99
34841	63-67	Seat Belt Bolt Kit - Silver - 2 req'd	$14.99
41550	64-66	Seat Belt Bracket - Narrow	$24.99
2463	66	Seat Belt Buckle Bracket w/ Holes	$9.99
1738	67	Seat Belt Buckle Bracket w/o Holes - 67E	$39.99
1739	67	Seat Belt Buckle Bracket w/ Holes - 67L	$39.99
K1400	65-66	Seat Belt Buckle Bracket Screws - pr	$1.99
40491	63-66	Seat Belt D-Ring only - 66E	$21.99
34878	66-67	Seat Belt D-Ring only - 66L	$21.99
26618	66-67	Seat Belt Pocket - Shoulder Belt - Black - ea	$17.99
26620	66-68	Seat Belt Pocket - Shoulder Belt - Blue - ea	$28.99
26621	66-68	Seat Belt Pocket - Shoulder Belt - Red - ea	$28.99
26622	66-68	Seat Belt Pocket - Shoulder Belt - Saddle - ea	$28.99
467220	65-66E	Seat Belt Pockets - Black - pr	$34.99
4672_	65-66E	Seat Belt Pockets - Color - pr	$34.99
467320	66L-67	Seat Belt Retractor Cover - Black - pr	$38.99
4673_	66L-67	Seat Belt Retractor Cover - Color - pr	$38.99
25469	63-67	Seat Belt Retractor - Clip-on Plastic - 2 req'd	$13.99
43898	65-66E	Seat Belt Retractor - Original 65-66 Style Chrome Roll-a-Belt - 2 req'd	$24.99
42342	65-66	Seat Belt Retractor Instruction Tags - pr	$3.99
42341	65-66E	Seat Belt Retractors - Replacement - pr	$29.99
23165	63	Seat Belt Reinforcement - Outer LH	$43.99
23164	63	Seat Belt Reinforcement - Outer RH	$43.99
23166	63	Seat Belt Reinforcement - Inner LH	$43.99
23167	63	Seat Belt Reinforcement - Inner RH	$43.99
23169	65-67	Seat Belt Reinforcement - Outer LH	$43.99
23168	65-67	Seat Belt Reinforcement - Outer RH	$43.99
36791	65-67	Seat Belt Reinforcement - Underbody Inner LH	$43.99
36792	65-67	Seat Belt Reinforcement - Underbody Inner RH	$43.99
35168	66-67	Shoulder Belt Cables - Coupe w/ 36 Gallon Tank	$112.99
42343	67	Shoulder Harness Buckle Cups & Screws	$28.99
42345	66-67	Shoulder Harness Chrome End	$21.99
42344	66-67	Shoulder Harness End Covers - Black - pr	$28.99
49941	66-67	Shoulder Harness End Covers - Blue - pr	$41.99
49942	66-67	Shoulder Harness End Covers - Saddle - pr	$41.99
49943	66-67	Shoulder Harness End Covers - Red - pr	$38.99
42346	66-67	Shoulder Harness Nut Plates w/ Rivets - pr	$93.99
40514	66-67	Shoulder Harness Reinforcement - LH	$47.99
40515	66-67	Shoulder Harness Reinforcement - RH	$47.99

Headrests

New foam, metal substrate and covers for a perfect restoration. Bezel sold separately.

4262_	66	Headrests - Vinyl - pr	$339.99
4263_	67	Headrests - Vinyl - pr	$339.99
4264_	66	Headrests - Leather - pr	$359.99
4265_	67	Headrests - Leather - pr	$359.99

Headrest Components

4255_	66	Headrest Covers - Vinyl - pr	$99.99
4256_	67	Headrest Covers - Vinyl - pr	$99.99
4258_	66	Headrest Covers - Leather - pr	$124.99
4259_	67	Headrest Covers - Leather - pr	$124.99
1157	66	Headrest Foam - pr	$42.99
1161	67	Headrest Foam - pr	$42.99
1158	66-67	Headrest Metal - pr	$229.99
X2470	66-67	Headrest Bezels - 2 req'd	$22.99
K1340	66-67	Headrest Bezel Screw Set - 4 pc	$1.99

Headrest Conversion Kit

Allows you to convert two regular seats into seats with headrests! Purchase of the Complete Headrests & Bezels is required.

1159	66-67	Headrest Conversion Kit	$287.99

Headrest Covering Service

Send us your damaged headrests (with headrest metal) and we'll recover them like new again with your choice of new leather or vinyl covers and new foam. Specify year & color.

26274	66-67	Headrest Recovering Service - Vinyl - pr	$209.99
26275	66-67	Headrest Recovering Service - Leather - pr	$209.99

800-458-3475
CorvetteAmerica.com
WARNING: Cancer and Reproductive Harm — www.P65Warnings.ca.gov

MADE BY Corvette America

1967 Park Brake Consoles

Pre-Painted and ready for installation! Available in all original colors.

4150_	67	Park Brake Console	$129.99
37272	67	Park Brake Console Bolts - Rear - pr	$4.99
37269	67	Park Brake Console J-Nuts - 4 pc	$2.99
K1110	67	Park Brake Console Screws - 4 pc	$3.99
37270	67	Park Brake Console Trim	$81.99
K1234	67	Park Brake Console U-Nuts - Rear - pr	$2.99
K1235	67	Park Brake Slide Retainer Nuts - 10 pc	$3.99
2009	67	Park Brake Slide Seal	$4.99

MADE BY Corvette America

Complete Center Armrests

Assembly includes metal, foam and your choice of vinyl or leather cover. Ready to install.

4245_	63-66 Complete Center Armrest - Leather	$119.99
4243_	63-64 Complete Center Armrest - Vinyl	$109.99
4244_	65-66 Complete Center Armrest - Vinyl	$109.99

Center Armrest Covers

4242_	63-66 Center Armrest Cover - Leather	$52.99
4240_	63-64 Center Armrest Cover - Vinyl	$34.99
4241_	65-66 Center Armrest Cover - Vinyl	$34.99
7365	63-66 Center Armrest Foam	$24.99
7393	63-66 Center Armrest Metal	$24.99
42338	63-66 Center Armrest Mount Screw	$1.99

Qualifies INTERIOR Package

Call Today & SAVE on a NEW Interior Package!

Get discounts on Interiors & Parts when you order an Interior Package!

MADE IN THE USA

#50531 1965-66 Bright Red Bullet Console

#52637 1963-66 Silver Bullet Console

Bullet Consoles

The C2 Bullet Console fits over the factory armrest of 1963-1966 Corvettes to provide some much-needed storage space, king-sized cup holders & a comfortable armrest. The padded armrest hinges open to a storage compartment that measures 4.5" wide x 14" long x 3" deep. Bullet Console is custom hand-crafted in America and is upholstered with high-quality, automotive-grade vinyl. Installation is quick & easy, just slip over the factory armrest & start cruising!

50530	63-64 Bullet Console - Fiesta Red	$177.99
50531	65-66 Bullet Console - Bright Red	$177.99
50532	63-66 Bullet Console - Maroon	$177.99
50533	63-66 Bullet Console - White	$177.99
50534	63-66 Bullet Console - Black	$177.99
50535	63-66 Bullet Console - Silver	$177.99
50536	63-66 Bullet Console - Bright Blue	$177.99
50537	63-66 Bullet Console - Dark Blue	$177.99
50538	63-66 Bullet Console - Saddle	$177.99
52630	63-66 Bullet Console - Dual Cup Holders - Black	$199.99
52631	63-66 Bullet Console - Dual Cup Holders - Bright Blue	$199.99
52632	63-66 Bullet Console - Dual Cup Holders - Bright Red	$199.99
52633	63-66 Bullet Console - Dual Cup Holders - Dark Blue	$199.99
52634	63-66 Bullet Console - Dual Cup Holders - Fiesta Red	$199.99
52635	63-66 Bullet Console - Dual Cup Holders - Maroon	$199.99
52636	63-66 Bullet Console - Dual Cup Holders - Saddle	$199.99
52637	63-66 Bullet Console - Dual Cup Holders - Silver	$199.99
52638	63-66 Bullet Console - Dual Cup Holders - White	$199.99

1967 Center Armrests

MADE BY Corvette America

Our Center Armrest pig grain top panels are available in leather or vinyl to match your original seat covers. Driver Leather is not pig grain.

4246_	67	Center Armrest - Leather	$77.99
4266_	67	Center Armrest - Vinyl	$74.99
X2258	67	Center Armrest - Driver - Black Leather	$50.99

Corvette America Since 1977

WARNING: Cancer and Reproductive Harm — www.P65Warnings.ca.gov

1967 Convertible Rear Quarter Panel

1965 Coupe Rear Quarter Panel w/ Power Vent

1963 Coupe Rear Quarter Panel

Rear Quarter Panels

MADE BY Corvette America

Clips included. Available in every original color!

4269_	63-67	Rear Quarter Panels - Convertible - pr	$129.99
4270_	63	Rear Quarter Panels - Coupe - pr	$109.99
4271_	64	Rear Quarter Panels - Coupe - pr	$109.99
4272_	65	Rear Quarter Panels - Coupe - pr	$109.99
4273_	66-67	Rear Quarter Panels - Coupe - pr	$109.99

1963-1967 Rear Quarter Panel Hardware

35086	64-67	Convertible Quarter Panel Bumpers - 6 pc	$4.99
K1088	63-67	Convertible Quarter Panel Screw Set	$3.99
35096	63-67	Conv. Quarter Panel Supports & Rivets Set	$21.99
35097	63-67	Convertible Quarter Panel U-Nuts - 4 pc	$2.99
35085	63-67	Coupe Quarter Panel Clips - 4 pc set	$16.99
K1089	63-67	Coupe Quarter Panel Screw Set	$2.99
35092	63	Coupe Quarter Panel Supports & Rivets Set	$21.99
35093	64-65	Coupe Quarter Panel Supports & Rivets Set	$28.99
35094	66-67	Coupe Quarter Panel Supports & Rivets Set	$21.99
35095	63-67	Coupe Quarter Panel U-Nuts - 5 pc set	$3.99
35098	64-65	Coupe Powervent Rear Cardboard Cover	$19.99
K1423	64-65	Coupe Powervent Rear Cover Screw Set	$3.99
35162	64-65	Coupe Powervent Rear Cover U-Nuts - 4 pc	$1.99
35163	64-65	Coupe Powervent Rear Screen	$13.99
42357	63	Pinchwelt Cap - Convertible w/ Bolt & Nut	$49.99
42359	64-67	Pinchwelt Cap - Coupe - RH	$61.99

IN STOCK & READY FOR SHIPPING!

In addition to our regular delivery, we offer more options for getting your packages when you need them. Call our Sales Reps for details.

CORVETTES at CARLISLE® PRESENTED BY Corvette America

We are proud to be the presenting sponsor of the world's largest Corvette event! Corvettes at Carlisle features more than 5,000 Corvettes of all generations.

August 22-25, 2019 • CarlisleEvents.com

800-458-3475
CorvetteAmerica.com

WARNING: Cancer and Reproductive Harm — www.P65Warnings.ca.gov

1963-1967 Dash Pads *The Finest Dash Pads Available!*

1963-64 Dark Blue LH Dash Pad

1965-66 Saddle RH Dash Pad

Dash Pads

Corvette America's 1963-67 Dash Pads have always been known for the highest quality & strictest attention to originality. Our expert Research & Development Staff has created a new manufacturing process that ensures thickness consistent to the original GM pads for every Dash Pad we manufacture.

Look no further than Corvette America for 1963-67 Dash Pads that are 100% original & 100% consistent 100% of the time.

Note: All RH Dash Pads include Dash Inserts. Owners of 1964 Corvettes should check their original pad to see whether a 4-Hole or 6-Hole Insert is used, due to mid-year production changes.

4002_	63-64 Dash Pad - LH	$599.99
4003_	63-64 Dash Pad - RH - 4 Hole - 64E	$599.99
4004_	64 Dash Pad - RH - 6 Hole - 64L	$599.99
4005_	65-67 Dash Pad - LH	$599.99
4006_	65-66 Dash Pad - RH	$599.99
4007_	67 Dash Pad - RH	$599.99

Shown here mounted on the frame with Dash Pads installed.

Dash Covers

Our Dash Covers are made of original ABS material & are vacuum-formed for a perfect fit. Cover the fiberglass frame surrounding your dash pads just like the originals!

Installation Service Available!

Ask your Sales Representative for details.

We Recommend Professional Installation.

4030_	63-64 Dash Cover	$199.99

63-64 Seville Grain

65-67 Madrid Grain

Dash Pad Skins

A perfect solution if your original dash is faded, worn or slightly damaged, but you don't want to replace your entire pad, recover it! You get authentic restoration & beauty, plus the benefit of keeping your original component. Skins come with easy-to-follow, step-by-step instructions. For fast & easy installation use Corvette America's Spray Adhesive.

Installation Service Available!

Ask your sales representative for details.

We Recommend Professional Installation.

4031_	63-64 Dash Pad Skin - LH	$149.99
4032_	63-64 Dash Pad Skin - RH	$149.99
4033_	65-67 Dash Pad Skin - LH	$149.99
4034_	65-66 Dash Pad Skin - RH	$149.99
4035_	67 Dash Pad Skin - RH	$149.99
90100	63-64 Dash Frame Skin Installation	$209.99
90101	63-67 Dash Pad Skin Installation	$239.99
8568	63-67 Interior Spray Adhesive	$29.99

Dash Inserts

4053_	63-64 Dash Insert - 4 Hole - 64E	$20.99
4054_	64-66 Dash Insert - 6 Hole - 64L	$20.99
K1077	63-64 Dash Insert Screws - 4 pc - 63E	$1.99
K1078	64-66 Dash Insert Screws - 6 pc - 64L	$1.99

Dash Pad Clip Set

Do the job right with the right clip for the job!
Each 14-piece set does one dash pad.
Also available individually.
Made by Corvette America!

41832	63-67 Dash Pad Clip	$2.99
X2065	63-67 Dash Pad Clips - 14 pc	$30.99

WARNING: Cancer and Reproductive Harm — www.P65Warnings.ca.gov

Serving the Corvette Community Since 1977.

1963-1964 LEATHER Deluxe Door Panels!

Qualifies INTERIOR Package

#437242 1963-64 Deluxe Door Panel - Coupe

#4372Z2 1964 Deluxe Door Panel - Coupe

1963-1964 Deluxe Door Panels

MADE BY Corvette America

With correct dielectrics and accurately detailed backs, these panels provide superior fit and quality, giving you the truest reproduction Door Panels available for your restoration dollar! Deluxe Panels come complete with pre-installed Metal Upper Supports, Reflectors, Lock Knobs, Door Opening Bezels, Trim Strips and Felts.

4372_ 63-64 Coupe Deluxe Door Panels - pr **$809.99**
4373_ 63-64 Convertible Deluxe Door Panels - pr..... **$809.99**

Interior Products by Corvette America — Made in the U.S.A.

1963-1964 Panels w/ Metal Upper Supports

Need new panels but still have perfectly good hardware? Our Door Panels with Metal Upper Supports come complete with felt. Just transfer your own hardware (the pre-cut backing makes it easy) & install.

4370_ 63-64 Coupe Door Panels w/ Metal Upper Supports - pr **$459.99**
4371_ 63-64 Convertible Door Panels w/ Metal Upper Supports - pr **$459.99**

1963-1964 LEATHER Deluxe Door Panels

Now Available in LEATHER! Our Deluxe Panels come complete with pre-installed Metal Upper Supports, Reflectors, Lock Knobs, Door Opening Bezels, Trim Strips and Felts.

MADE IN THE USA

4366_ 63-64 Coupe Leather Deluxe Door Panels - pr..... **$1309.99**
4367_ 63-64 Convertible Leather Deluxe Door Panels - pr .. **$1309.99**

1963-1964 Door Panels w/o Upper Supports

For the do-it-yourselfer. Requires transfer of your Upper Supports, Felts & Trim.

4365_ 63-64 Door Panels without Upper Supports - pr **$329.99**
K1074 63-64 Door Panel Screws & Washers - 40 pc **$7.99**

Insulation, Sound & Vapor Barriers

51977 63-67 Door Insulation Noise Damper Kit **$62.99**
51690 63-67 Sound & Vapor Barriers - pr **$33.99**
39939 63-67 Vapor Barriers - Clear - pr **$24.99**

ATTENTION 1964 Corvette Owners w/ White or Silver Interiors: If you use color code 65 (White) or 61 (Silver), you will receive BLACK carpeting on your door panels. To order white or silver door panels with a different original carpet color, use the 2-digit code given below. These Codes are for ordering door panels only.

Z1 – White w/ Dk Blue Carpet
Z2 – White w/ Red Carpet
Z3 – White w/ Saddle Carpet
Z4 – Silver w/ Dk Blue Carpet
Z5 – Silver w/ Silver Carpet

WARNING: Cancer and Reproductive Harm — www.P65Warnings.ca.gov

1965-1967 Door Panels *The Best Fitting Panels Available!*

Correctly Contoured Felts • Softer Feel • Correct Upper Supports • Pre-Cut Vent Window Crank Openings

#439940 1965-66 Deluxe Door Panel - Coupe

#440220 1965-66 Deluxe Door Panel - Convertible

#440137 1965 Deluxe Door Panel - Convertible

#440052 1965-66 Deluxe Door Panel - Coupe

1965-1967 Deluxe Door Panels

MADE BY Corvette America

Let our interior professionals do everything except mount the panels on your car! Complete with pre-installed Metal Upper Supports, Upper Door Trim, Armrest Trim Strip, Door Opening Bezel and Felt.

4399_	65-66	Coupe Deluxe w/ Metal Support - LH	**$529.99**
4400_	65-66	Coupe Deluxe w/ Metal Support - RH	**$529.99**
4403_	67	Coupe Deluxe w/ Metal Support - LH	**$529.99**
4404_	67	Coupe Deluxe w/ Metal Support - RH	**$529.99**
4401_	65-66	Convertible Deluxe w/ Metal Support - LH	**$529.99**
4402_	65-66	Convertible Deluxe w/ Metal Support - RH	**$529.99**
4405_	67	Convertible Deluxe w/ Metal Support - LH	**$529.99**
4406_	67	Convertible Deluxe w/ Metal Support - RH	**$529.99**

1965-1967 Panels w/ Upper Supports & Felt

Need new panels but still have perfectly good hardware?
Our Door Panels with Metal Upper Supports come complete with felt. Just transfer your own hardware (the pre-cut backing makes it easy) and install.

4391_	65-66	Coupe w/ Metal Support & Felt - LH	**$369.99**
4392_	65-66	Coupe w/ Metal Support & Felt - RH	**$369.99**
4395_	67	Coupe w/ Metal Support & Felt - LH	**$369.99**
4396_	67	Coupe w/ Metal Support & Felt - RH	**$369.99**
4393_	65-66	Convertible w/ Metal Support & Felt - LH	**$369.99**
4394_	65-66	Convertible w/ Metal Support & Felt - RH	**$369.99**
4397_	67	Convertible w/ Metal Support & Felt - LH	**$369.99**
4398_	67	Convertible w/ Metal Support & Felt - RH	**$369.99**

Corvette America's INTERIOR Package THE ORIGINAL

Call Today & SAVE on a NEW Interior Package!

Get discounts on Interiors & Parts when you order an Interior Package!

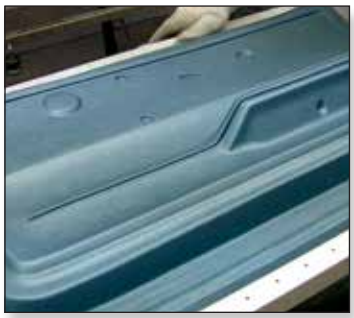

WARNING: Cancer and Reproductive Harm — www.P65Warnings.ca.gov

Serving the Corvette Community Since 1977.

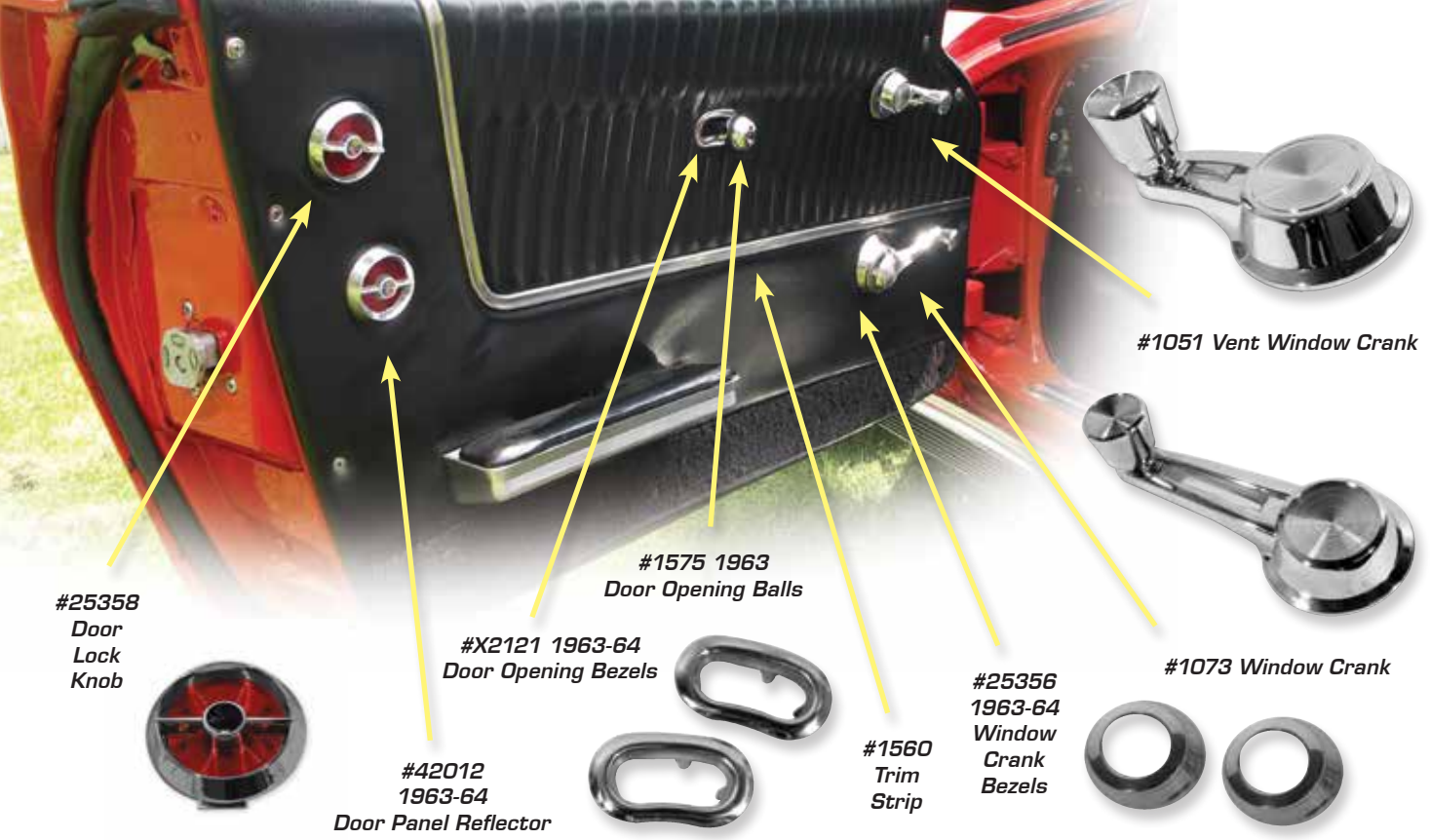

Door Panel Trim Strips

Beautiful and durable stainless steel trim strips will look great for years and years.

1560 63-64 Door Panel Trim Strips - pr. $329.99

Door Lock Knob & Reflector Set

34693 63-64 Door Lock Control Mount Screw Set - 4 pc $3.99
25358 63-64 Door Lock Knob $26.99
X2100 63-64 Door Lock Knob & Reflector Set $79.99
42012 63-64 Door Panel Reflector $19.99
42337 63-64 Door Panel Reflector Lenses - 8 pc $18.99

Door Opening Bezels

X2121 63-64 Door Opening Bezels - pr. $19.99
X2059 65-67 Door Opening Bezels - pr. $16.99

Door Panel Racetrack Trim

Our 8-Piece Set trims both doors.

X2036 65-67 Door Panel Racetrack Trim - 8 pc $209.99

Armrest Trim Strip

Larger-than-original mounting tabs make installation a snap!

X2035 65-67 Armrest Trim Strip $29.99

800-458-3475
CorvetteAmerica.com
WARNING: Cancer and Reproductive Harm — www.P65Warnings.ca.gov

#1575 1963 Black Door Opening Balls

#52145 1964-67 Chrome Door Opening Balls

#1076 1965-66 Inside Lock Knob

#1078 1967 Inside Lock Knob

#0718 1967 Window Crank / Lock Knob Retaining Clip

#1736 1963-67 Inside LH Door Opening Mechanism

#428830 1965 Red Inside Door Handles

#428840 1965 Bright Blue Inside Door Handles

Door Opening Balls

1575	63	Door Opening Balls - Black - pr	$9.99
1059	64-67	Door Opening Balls - Chrome - Plastic - pr	$16.99
52145	64-67	Door Opening Balls - Chrome - Metal - pr	$22.99

Door Opening Mechanisms

1736	63-67	Door Opening Mechanism - LH	$15.99
1735	63-67	Door Opening Mechanism - RH	$15.99
34673	63-67	Door Opening Mechanism Shields - pr	$5.99
34671	63-67	Door Opening Mechanism Springs - pr	$3.99

Door Panel Lock Knobs

34693	65-67	Door Lock Control Mount Screw Set - 4 pc	$3.99
1076	65-66	Lock Knob	$15.99
1078	67	Lock Knob	$30.99
36774	65-67	Lock Knob Spacers - pr	$4.99

Inner Door Handles

1065	66-67	Door Handle - Inside - Chrome - LH	$60.99
1066	66-67	Door Handle - Inside - Chrome - RH	$59.99
4288_	65	Door Handles - Inside - Colors - pr	$24.99
34680	66-67	Door Handle Reinforcements w/ Rivets - pr	$21.99
34678	65	Door Handle Screws - Black - 4 pc	$3.99
42336	65	Door Handle T-Nut & Rivet Set	$10.99

#51690

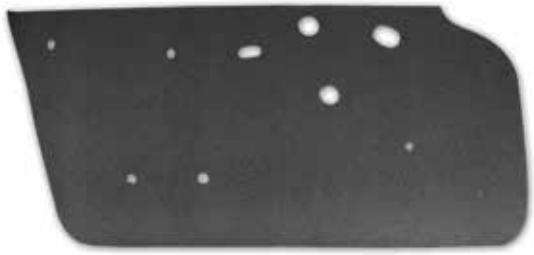

#39939

Insulation, Sound & Vapor Barriers

51977	63-67	Door Insulation Noise Damper Kit	$62.99
51690	63-67	Sound & Vapor Barriers - pr	$33.99
39939	63-67	Vapor Barriers - Clear - pr	$24.99

#472553 1967 Saddle Window Crank Handle

#25357 1965-67 Stainless Steel Window Crank Bezels

#1051 1963-64 Vent Window Crank

#472630 1967 Red Vent Crank Handle

Vent & Window Cranks

34689	63-67	Vent Crank Foam Seals - Behind Panel - pr	$4.99
4726_	67	Vent Crank Handle - Colors	$35.99
1051	63-64	Vent Window Crank	$19.99
1052	65-67	Vent Window Crank	$19.99
1073	63-64	Window Crank	$19.99
1371	65-67	Window Crank - 67 Replacement	$19.99
43552	67	Window Crank - Clear	$9.99
25356	63-64	Window Crank Bezels - Stainless Steel - pr	$71.99
25357	65-67	Window Crank Bezels - Stainless Steel - pr	$71.99
34688	63-67	Window Crank Foam Seals - Behind Panel - pr	$4.99
4725_	67	Window Crank Handle - Colors	$35.99
4909	63-67	Window Crank Removal Tool	$7.99
0718	63-67	Window Crank Retaining Clips	$0.99
35625	63-67	Window Crank Spacer - Plastic - pr	$4.99

WARNING: Cancer and Reproductive Harm — www.P65Warnings.ca.gov

#1094 1963-67 Door Panel Felts - Coupe

#1095 1963-66 Door Panel Felts - Convertible

#1061 Retaining Clip

#K1086 Retaining Clip Screws

Door Panel Felts, Clips & Seals

1095	63-66	Door Panel Felts - Convertible - pr	$59.99
1120	67	Door Panel Felts - Convertible - pr	$59.99
1094	63-67	Door Panel Felts - Coupe - pr	$59.99
1061	65-67	Door Panel Retaining Clip - 5 req'd per panel	$4.99
43449	65-67	Door Panel Retaining Clips - 10 pc	$45.99
K1086	65-67	Door Panel Retaining Clip Screw Set - 10 pc	$3.99
43498	63-67	Lower Corner Molding - Coupe	$81.99
52208	63-67	Outer Window Seals - Convertible - Import - pr	$14.99
1662	63-67	Outer Window Seals - Convertible - USA - pr	$24.99
52207	63-67	Outer Window Seals - Coupe - Import - pr	$14.99
1661	63-67	Outer Window Seals - Coupe - USA - pr	$24.99

#35090 1963 Coupe Pinchwelt Cap 1 Hole RH - 63L

#33140 1964-67 Coupe Pinchwelt Caps

#42359 1964-67 Coupe RH Pinchwelt Cap

Pinchwelt Caps & Screw Set

42357	63	Pinchwelt Cap - Convertible w/ Bolt & Nut	$49.99
42358	64-67	Pinchwelt Cap - Coupe - LH	$61.99
42359	64-67	Pinchwelt Cap - Coupe - RH	$61.99
35087	63E	Pinchwelt Cap - Coupe 2 Hole LH - 63E	$28.99
35088	63E	Pinchwelt Cap - Coupe 2 Hole RH - 63E	$28.99
35089	63L	Pinchwelt Cap - Coupe 1 Hole LH - 63L	$34.99
35090	63L	Pinchwelt Cap - Coupe 1 Hole RH - 63L	$34.99
33140	64-67	Pinchwelt Caps - Coupe - pr	$112.99
35091	63	Pinchwelt Cap Screw Set - Coupe - 4 pc	$1.99
42353	63	Pinchwelt Kit	$24.99

Additional Door Panel Components

34684	63-67	Door Hinge Screws - 32 pc	$55.99
34682	63-67	Door Latch Screws - 8 pc	$6.99
K1067	63-64	Door Panel Grommets - 11 pc	$3.99
K1074	63-64	Door Panel Screws & Washers - 40 pc	$7.99
34683	63-67	Power Window Conduit Screw & Nut Set	$1.99
39939	63-67	Vapor Barriers - pr	$24.99

1965-66 Bright Blue Coupe Sun Visors

Sun Visors

MADE BY Corvette America

Precise designs for Coupes & Convertibles. Sold in pairs.

4075_	63-64	Sun Visors - Convertible - pr	$119.99
4077_	65-66	Sun Visors - Convertible - pr	$119.99
4065_	67	Sun Visors - Convertible - pr	$119.99
4075_	63	Sun Visors - Coupe - pr	$119.99
4076_	64	Sun Visors - Coupe - pr	$109.99
4078_	65-66	Sun Visors - Coupe - pr	$109.99
4066_	67	Sun Visors - Coupe - pr	$109.99

#0943 1963-67 Sun Visor Hardware set

Sun Visor Hardware

Set includes: 4 pins, 4 screws, 4 nuts & 8 washers.

0943	63-67	Sun Visor Hardware Set	$15.99
43503	63-67	Sun Visor Screw	$2.99
35169	63-67	Visor Nut Screwdriver - Special Tip	$9.99
K1054	63-67	Visor Pin to Windshield Frame Screws - 4 pc	$5.99

1963-64 Saddle Armrest

#X2016 1963-64 Armrest Support

Complete Armrests

MADE BY Corvette America

Completely assembled & ready for installation.

4305_	63-64	Complete Armrests - 2 req'd	$78.99
430920	63-64	Armrest Pads & Covers - Black - pr	$64.99
4309_	63-64	Armrest Pads & Covers - Color - pr	$64.99

Armrest Components

4300_	63-64	Armrest Covers - pr	$11.99
34691	63-64	Armrest Nut Plate & Rivets - 2 req'd	$7.99
K1066	63-64	Armrest Pad Screw - 4 pc	$1.99
K1055	63-64	Armrest Bolts - 4 pc	$3.99
X2016	63-64	Armrest Support	$31.99

800-458-3475
CorvetteAmerica.com

WARNING: Cancer and Reproductive Harm — www.P65Warnings.ca.gov

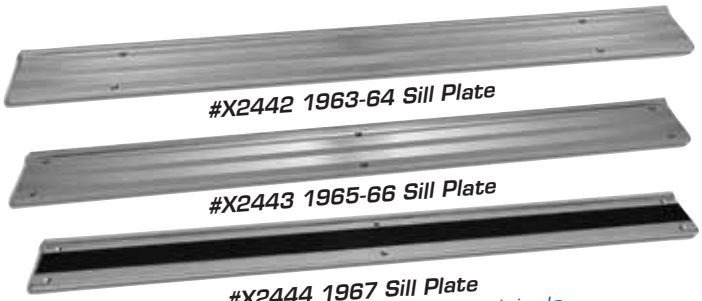

#X2442 1963-64 Sill Plate

#X2443 1965-66 Sill Plate

#X2444 1967 Sill Plate

Correct number of Ribs like the originals.

Sill Plates

MADE BY Corvette America

X2442	63-64 Sill Plate	$20.99
X2443	65-66 Sill Plate	$20.99
X2444	67 Sill Plate	$25.99
K1070	63-64 Sill Plate Screw Set - 8 pc	$3.99
K1071	65-67 Sill Plate Screw Set - 12 pc	$3.99
28442	63-64 Wire Cover Floor Plates - pr	$32.99
28443	65-67 Wire Cover Floor Plates - pr	$32.99

#444535 1963 Red LH Radio Side Panel

#444620 1964-66 Black LH Radio Side Panel

#444753 1967 Saddle LH Radio Side Panel

#444840 1965-67 Bright Blue RH Radio Side Panel w/ AC

Radio Side Panels

MADE BY Corvette America

4445_	63 Radio Side Panel - LH	$77.99
4446_	64-66 Radio Side Panel - LH - 65-66 Radio Delete or w/o Power Antenna	$77.99
4444_	65-66 Radio Side Panel - LH w/ Power Antenna	$77.99
4447_	67 Radio Side Panel - LH	$77.99
4448_	63-67 Radio Side Panel - RH - 67 w/ AC	$77.99
4449_	67 Radio Side Panel - RH - 67 w/o AC	$77.99
K1087	63-67 Radio Side Panel Screws - 4 pc	$3.99
34652	63-67 Radio Side Panel U-Nuts - 4 pc	$1.99

1963-1967 Interior Screw Sets

Many of the screws used in your Corvette's interior in one convenient package! Interior Screw Sets come with a convenient master list of contents. Each kind of screw is wrapped in its own packing and clearly labeled. Contents of sets shown in table.

K1096	63	Conv. Screw Set	$33.99
K1095	63	Coupe Screw Set	$33.99
K1098	64	Conv. Screw Set	$33.99
K1097	64	Coupe Screw Set	$33.99
K1100	65-66	Conv. Screw Set	$32.99
K1099	65-66	Coupe Screw Set	$32.99
K1102	67	Conv. Screw Set	$32.99
K1101	67	Coupe Screw Set	$32.99

Screw Description	*1963 Coupe #K1095*		*1964 Coupe #K1097*		*65-66 Coupe #K1099*		*1967 Coupe #K1101*	
Armrest Screws w/ Washers	n/a	n/a	n/a	n/a	8	8	8	8
Console Screws	18	18	8	8	8	8	8	8
Conv Top Rear Latch	n/a	8	n/a	8	n/a	8	n/a	8
Dogleg Quarter Panel Behind Seat Screws	6	6	6	6	6	6	6	6
Door Panel Screws w/ Washers	36	36	36	36	n/a	n/a	n/a	n/a
Door Panel Clip Screws	n/a	n/a	n/a	n/a	10	10	10	10
Glove Box Liner Screws	9	9	9	9	9	9	9	9
Grab Bar Opening Insert Screws	4	4	4	4	6	6	n/a	n/a
Halo Panel Screws w/ Washers	n/a	n/a	12	n/a	12	n/a	12	n/a
Headlight Switch Mounts	4	4	4	4	4	4	4	4
Inside Mirror Support Screws	2	2	2	2	2	2	2	2
Inside Rear Window Molding Screws	28	n/a	18	n/a	18	n/a	18	n/a
Kick Panel Screws	14	14	14	14	12	12	12	12
Radio Side Panel Screws	4	4	4	4	4	4	4	4
Seat Bumper Screws	4	4	4	4	4	4	4	4
Sill Plate Screws	8	8	8	8	12	12	12	12
Steering Wheel Mount Screws	6	6	6	6	6	6	6	6
Sun Visor Support Rod to Windshield Frame	4	4	4	4	4	4	4	4
Windshield Molding Screws	18	12	18	12	18	12	18	12
		1963 Conv. #K1096		*1964 Conv. #K1098*		*65-66 Conv. #K1100*		*1967 Conv. #K1102*

***K Products** are convenient, prepackaged hardware and fastener kits that save you time and money.*

1963-1964 Carpet

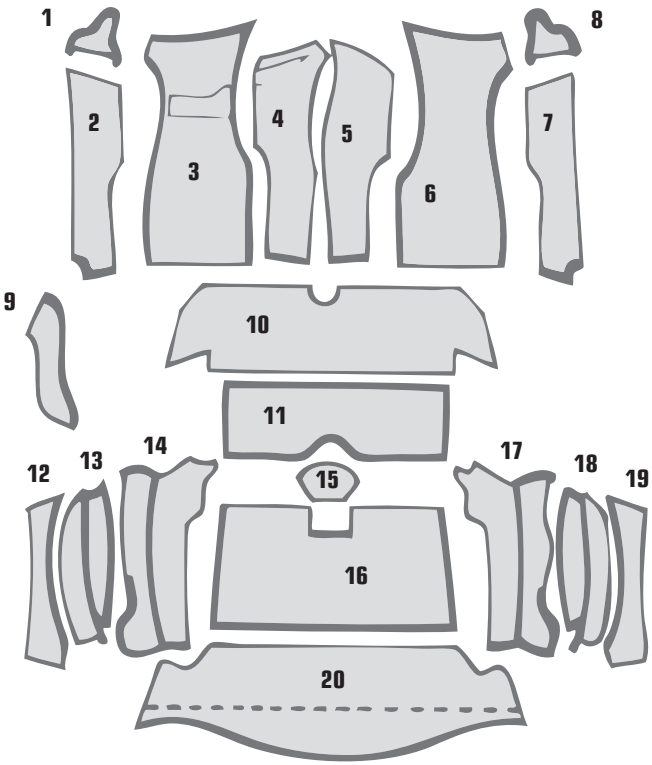

Incomparable DETAILS & QUALITY!

Correct Foam Backing

Accurate Dark Gray color (vs. white)

and high density for 1963-1964.

The ONLY 1963-64 Carpet for the True Restorer!

Loop Carpet with Original Foam Back

Loop Carpet with original foam padding. Install as is for an accurate restoration of your 1963-1964 Corvette. For superior noise & heat reduction, also use a Carpet Insulation Kit or Heat Barrier Kit.

4506_ 63 Loop Carpet w/ Foam Back Padding - Coupe **$429.99**
4505_ 63 Loop Carpet w/ Foam Back Padding - Conv..... **$429.99**
4508_ 64 Loop Carpet w/ Foam Back Padding - Coupe **$429.99**
4507_ 64 Loop Carpet w/ Foam Back Padding - Conv. **$429.99**

Loop Carpet - without padding

Loop carpet just like our Foam Back sets above, only without padding. Once installed, it looks exactly the same as the original carpet set. But you save more money! For superior noise and heat reduction, also use a Carpet Insulation Kit or Heat Barrier Kit.

4510_ 63 Loop Carpet w/o Padding - Coupe..... **$369.99**
4509_ 63 Loop Carpet w/o Padding - Convertible **$369.99**
4512_ 64 Loop Carpet w/o Padding - Coupe..... **$369.99**
4511_ 64 Loop Carpet w/o Padding - Convertible **$369.99**
35611 63-67 Carpet Dimmer Switch Grommet - Rubber **$9.99**

Note: All Carpet Sets for 1964 Corvette Coupes include the Power Vent Carpet Sections as original.

1963 Carpet with Toolbox Cutouts

4608_ 63 Convertible Foam Back w/ Toolbox cutouts..... **$429.99**
4609_ 63 Coupe Foam Back w/ Toolbox cutouts **$429.99**
4610_ 63 Convertible w/ Toolbox cutouts **$369.99**
4611_ 63 Coupe w/ Toolbox cutouts..... **$369.99**

Heat Barrier Kits

If you're concerned with heat reduction, this is for you. Made of technologically advanced ceramic cloth backed by reinforced foil. Heat Barrier Kits reduce interior temperatures by up to 50%! Thermal rated to 2300°. And it's only 1/8" thick, so your carpet will fit perfectly. Choose front-only or a full set.

24330 63-67 Coupe or Convertible - Front-Only **$132.99**
24440 63-67 Coupe or Convertible - Full Set..... **$183.99**

Combine with Underlayment and Beat the Heat!

800-458-3475
CorvetteAmerica.com

WARNING: Cancer and Reproductive Harm — www.P65Warnings.ca.gov

1965-1967 Carpet

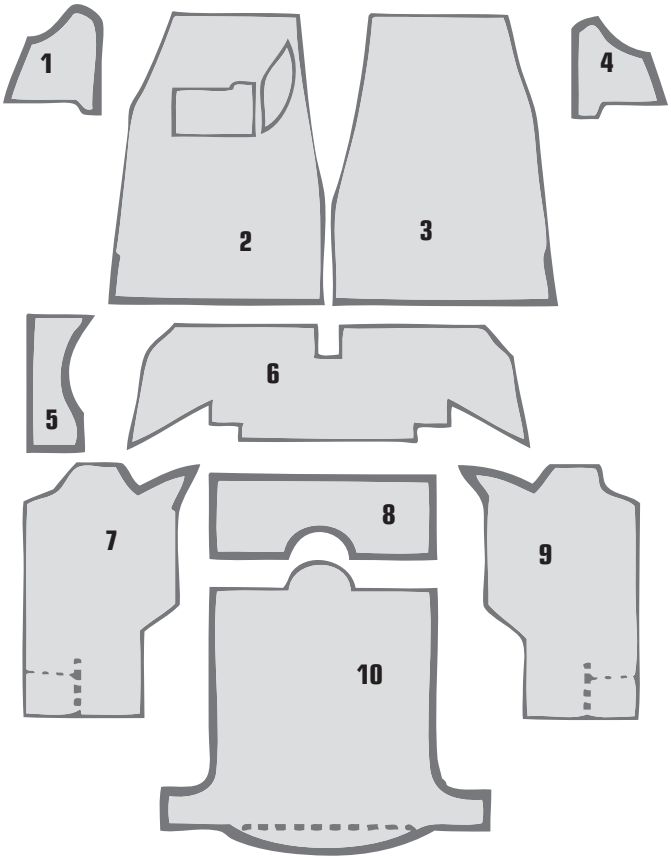

Loop Carpet

Loop Carpet, correctly press-molded. The original 1965-67 Carpet underlayment was a "rubber backed" jute material. Removal of your original carpet may result in damage to the jute portion of the original underlayment. If your rubber backing is damaged, our Original Style underlayment will provide an accurate installation of your 1965-67 Corvette carpet. For economy, you may select a Carpet Insulation Kit (versus Original Style Underlayment) to use for your carpet underlayment. For superior noise and heat reduction, a Heat Barrier Kit can be used in addition to any underlayment selection you make.

Carpet Sets

Power vent carpet sections included in all 1965 coupe sets. Padding not included.

4516_ 65-66 Carpet Set - Coupe $309.99
4513_ 65-66 Carpet Set - Convertible $309.99
4517_ 67 Carpet Set - Coupe $369.99
4514_ 67 Carpet Set - Convertible $309.99

Carpet - Fronts Only

Includes Kick Panel Sections. Padding not included.

4518_ 65-66 Front Carpet Set - Includes 1, 2, 3, 4 ..... $209.99
4519_ 67 Front Carpet Set - Includes 1, 2, 3, 4 ..... $209.99

Floor Drain Plugs

K1194 63-67 Floor Drain Plugs - 8 pc. $4.99

Incomparable DETAILS & QUALITY! The ONLY 1965-67 Carpet for the True Restorer!

Jute Padding with rubber backing - just like original!

Original Style Underlayment

The only choice for the true restoration! Exactly like original, jute padding backed with rubber. Nine-piece set covers both front and rear sections of car. All pieces individually die-cut. Combine with a Heat Barrier Kit to maximize heat and noise reduction.

1880 65-67 Coupe - Full Set $359.99
1881 65-67 Convertible - Full Set $359.99

Carpet Insulation Kits

Features jute padding backed with heat-reflective felting for a more durable underlayment that provides increased heat and noise reduction - all at an economical price. Full car set for coupe or convertible. Front-only set also available. For optimum heat and noise reduction, combine with Heat Barrier Kit.

26701 63-67 Carpet Insulation Kit - Front - Conv. & Coupe $90.99
26702 63-67 Carpet Insulation Kit - Rear - Coupe $90.99
26807 63-67 Carpet Insulation - Full Set - Convertible $129.99
26806 63-67 Carpet Insulation - Full Set - Coupe $129.99

WARNING: Cancer and Reproductive Harm — www.P65Warnings.ca.gov

AcoustiShield Carpet Insulation

All AcoustiShield Thermal Acoustic Insulation Kits are Year, Make & Model-Specific for each vehicle. They are pre-cut to the proper shape and ready to install.

51950 63-67 AcoustiShield Carpet Insulation - Complete - Cpe.. **$709.99**
51951 63-67 AcoustiShield Carpet Insulation - Front - Coupe.. **$229.99**
51952 63-67 AcoustiShield Carpet Insulation - Rear - Coupe... **$129.99**
51956 63-67 AcoustiShield Carpet Insulation - Complete Conv.. **$629.99**
51959 63-67 AcoustiShield Carpet Insulation - Front - Conv.. .. **$229.99**
51960 63-67 AcoustiShield Carpet Insulation - Rear - Conv.. ... **$129.99**

1963-64 Kick Panels w/ Carpet

Kick Panels

MADE BY Corvette America

Our Kick Panels are made of tough ABS plastic with pre-installed Windlaces in all original colors. Order with carpet pre-installed or without carpet. Sold in pairs.

4128_ 63-64 Kick Panels w/ Carpet **$74.99**
4129_ 65-67 Kick Panels w/ Carpet **$74.99**
4161_ 63-64 Kick Panels w/o Carpet **$42.99**
4162_ 65-67 Kick Panels w/o Carpet **$42.99**
K1090 63-64 Kick Panel Screws - 14 pc **$4.99**
K1091 65-67 Kick Panel Screws - 67 Replacement - 12 pc **$5.99**
34647 67 Kick Panel Screws - 12 pc **$13.99**
1411 63-64 Kick Panel Trim Strips - pr **$19.99**
1412 65-67 Kick Panel Trim Strips - pr **$19.99**

Note: Kick Panel Trim Strips must be painted to match your interior.

#465152 1965-67 Saddle Floor Mats

#465140 1965-67 Bright Blue Floor Mats

Carpeted Floor Mats

GM licensed Corvette Logo Floor Mats are made from the same high-quality, color-matched carpet as our Complete Carpet Sets. Features bound edges, non-skid rubber backing & embossed vinyl logo.

4651_ 63-67 Carpeted Floor Mats - pr **$97.99**

Code LC
"LC" embroidery for mats is available only as pictured.

Code LE
"LE" embroidery for mats is available only as pictured.

Embroidered Logo Option

Replace the embossed logo with a beautifully embroidered logo!
NOTE: Order requires 2 item numbers - the item # and color code shown above plus the item # and logo code "LC" or "LE".
Example: To order Black mats with Stingray-embroidered logo, order both 465120 and 4651LC.

 # + LC 63-67 "Corvette Stingray" Embroidered Logo ..... Add **$34.99**
 # + LE 63-67 "Corvette" Script Embroidered Logo ..... Add **$34.99**

800-458-3475
CorvetteAmerica.com
WARNING: Cancer and Reproductive Harm — www.P65Warnings.ca.gov

Embroidered Corvette Floor Mats

Dense pile black carpet with red Corvette script and a matching velour edge. Sold in pairs.

24710 63-67 Embroidered Corvette Floor Mats - pr..... **$124.99**

Basic Black Econo Floor Mats

A lightweight, economical version of our luxury mats with no logo.

47301 63-67 Basic Black Econo Floor Mats - Black only..... **$40.99**

Black Rubber Logo Mats

Molded no-slip ribs and logo, a stay-put bottom and durable rubber construction make these the best mats you can get for the price. Your mats will come with the correct year specific logo shown below.

32705 63-64 **32706** 1965 **32708** 1967

1963-67 Black Rubber Logo Mats - set..... **$105.99**

Rubber & Clear Vinyl Floor Mats

Choice of Clear Vinyl Mats (exact reproductions of the originals) or Black Rubber Mats each featuring Chevrolet emblems. Both styles are contoured for an exact fit.

1667 63-67 Clear Vinyl Mats - Reproduction - pr **$71.99**
4060 63-67 Black Rubber Mats - pr **$37.99**

WARNING: Cancer and Reproductive Harm — www.P65Warnings.ca.gov

#409754 1963-64 Saddle Coupe Headliner

#410020 1967 Black Coupe Headliner

Watch how they're made on YouTube!

#409520 1966-67 Black Hardtop Headliner

Hardtop Headliners

Features durable vinyl construction bonded to a rigid plastic backing, in all original colors. The 1966-67 models feature a layer of padding beneath the surface, just like the original.

4093_	63-64	Headliner - Hardtop	$219.99
4094_	65	Headliner - Hardtop	$219.99
4095_	66-67	Headliner - Hardtop	$229.99
K1369	63-67	Hardtop Header Trim Screw Set	$2.99

Coupe Headliners

Durable vinyl construction bonded to a rigid plastic backing, in all original colors. The 1967 Headliner is true to the original design with molded visor recesses.

4097_	63-64	Headliner - Coupe	$229.99
4098_	65	Headliner - Coupe	$229.99
4099_	66	Headliner - Coupe	$229.99
4100_	67	Headliner - Coupe	$229.99
43512	63-67	Headliner Molding - Coupe - pr.	$101.99
46610	64-67	Headliner Molding Clip - Coupe above door	$8.99
K1082	64-67	Halo Panel Screw Set - Coupe - 12 pc	$2.99

#429335 1963-64 Red Deck Lid Trim Strip

#429440 1965-67 Bright Blue Deck Lid Trim Strip

Convertible Deck Lid Trim Strips

Replace your unsightly Deck Lid Trim Strip with an exact reproduction from Corvette America. Original vinyl comes in all original colors & grains. 1963-64 Trim Strip has dielectric pattern as original, 1965-67 has madrid grain as original. Includes the original-style acorn nuts.

4293_	63-64 Convertible Deck Lid Trim Strips	$109.99
4294_	65-67 Convertible Deck Lid Trim Strips	$90.99

Deck Protectors

Prevent scratches by covering the area where your top comes in contact with your rear deck. Made of static-cling film, they require no adhesives and they're die-cut specifically for your model year!

21544	Softtop - Clear	**21545**	Softtop - Black
21546	Hardtop - Clear	**21547**	Hardtop - Black

1963-1967 Deck Protector $27.99

800-458-3475
CorvetteAmerica.com

WARNING: Cancer and Reproductive Harm — www.P65Warnings.ca.gov

1963 Coupe Split Rear Window Vinyl

Covers split window bar & areas between wheel wells & window edge.

4290_ 63 Coupe Split Rear Window Vinyl - 3 pc..... $20.99
K1080 63 Coupe Split Rear Window Trim Screw Set - 34 pc. $7.99

Coupe Rear Window Vinyl

Covers the upper portion of the rear deck at the base of the coupe rear window. Available in all original colors.

4291_ 63-64 Rear Window Vinyl - Coupe $20.99
4292_ 65-67 Rear Window Vinyl - Coupe $20.99

1964-1967 Coupe Rear Window Trim

Molded plastic trim for interior of coupe rear window. Dye to match.

22385 64-67 Coupe Rear Window Trim - LH..... $51.99
22386 64-67 Coupe Rear Window Trim - RH $51.99
K1079 64-67 Coupe Rear Window Trim Screw Set - 18 pc..... $5.99

#1747 1963-67 Storage Compartment Cover - Conv. & Coupe

Storage Compartment Cover

Like the originals, our Storage Compartment Covers are made from pressed hardboard, precision-cut for a proper fit.

1681 63-67 Storage Compartment Chrome Bezel..... $8.99
1747 63-67 Storage Compartment Cover - Conv. & Coupe..... $21.99
1174 63-67 Storage Compartment Drain Plug $1.99
K1194 63-67 Storage Compartment Drain Plug Set - 8 pc..... $4.99
42354 63 Storage Compartment Metal Luggage Stop..... $66.99
42355 64-66 Storage Compartment Metal Luggage Stop..... $66.99
42356 67 Storage Compartment Metal Luggage Stop..... $66.99

Convertible Top Tack Strip Kit

Contains all tack strips necessary for one Corvette.

22167 63-67 Convertible Top Tack Strip Kit..... $59.99

Convertible Rear Window Pillow

Our soft, foam-filled Rear Window Pillow prevents damage to your convertible's rear window when it's stowed. When your top is folded away, the window wraps smoothly around the Rear Window Pillow to eliminate unsightly folds, creases and scratches.

X2581 63-67 Convertible Rear Window Pillow..... $13.99

RaggTopp Convertible Cleaner & Protectants

RaggTopp Cleaner is an environmentally safe and biodegradable cleaner that uses an anti-oxidant formula to safely remove soil and stains. Will not harm paint or glass. Comes in a 16 oz pump spray with a fluorocarbon water-repelling system that uses a micro-bonding fluoropolymer formula.

For use on fabric or vinyl tops. RaggTopp Protectants provide ultraviolet protection with UV stabilizers to protect from all elements. Will not harm paint, glass, chrome or plastic windows.

43146 RaggTopp Fabric/Vinyl Top Cleaner (16oz spray)..... $14.99

For Fabric Applications

43147 RaggTopp Fabric Top Protectant (14oz aerosol)..... $26.99
43145 RaggTopp Cleaner and Fabric Top Protectant Set $39.99

For Vinyl Applications

43526 RaggTopp Vinyl Top Protectant (16oz spray) $18.99
44326 RaggTopp Cleaner & Vinyl Top Protectant Set..... $32.99

Look for our name on the box!

We provide many of our products to other Corvette parts suppliers.

WARNING: Cancer and Reproductive Harm — www.P65Warnings.ca.gov

Serving the Corvette Community Since 1977.

Convertible Tops - Kee Auto Top

8 Year Manufacturer's Warranty included!

Corvette America Convertible Tops are manufactured with these original features:

- Electro-Sealed Seams for air-tight comfort
- Strong, 35-40 ounce factory-grade material
- Clear, high-visibility windows

All Corvette America Convertible Tops also include:

- Convertible Top Pads
- Convertible Top Window Straps
- Wire-On Trim Strip
- Trim Strip End Cap Set

7817	Beige	**7815**	Black	**7816**	White

1963-67 Convertible Top - Undated **$348.99**

Convertible Top Hardware

7391	Convertible Top Pads - pr	**$62.99**
7392	63-67 Convertible Top Window Straps - pr	**$17.99**
23542	63-67 Wire-on Trim End Caps & Screws - 4 pc set	**$10.99**

Tops with Production Date Embossing Option

Includes "Dealer Do Not Remove" Tag and Window-Embossed Washing Instructions. Specify year and month of production when ordering. Note: Like all custom orders, dated tops are non-returnable. Order must be pre-paid. Allow 2 weeks for delivery.

3778	Beige	**3777**	Black	**3779**	White

63-67 Convertible Top with Date Embossing Option..... **$443.99**

"Dealer Do Not Remove" Tag

Date Option

Coffman Convertible Tops

Complete Coffman convertible tops includes the following:

- New original style top material Installed on frame
- Pads • Straps • New front latches
- New rear swinging latches
- Weatherstrip • New bushings/hardware
- New tack strip — original style fiber board
- Powder coated finish

53326	63-67 Convertible Top - Complete - Black Stafast	**$4176.99**
53327	63-67 Convertible Top - Complete - White Stafast	**$4176.99**
53328	63-67 Convertible Top - Complete - Tan Stafast	**$4176.99**
53336	63-67 Convertible Top - Complete - Black Vinyl	**$4074.99**
53337	63-67 Convertible Top - Complete - White Vinyl	**$4074.99**

Convertile Tops - Stayfast

7915	63-67 Convertible Top - Stayfast - Black	**$489.99**
7916	63-67 Convertible Top - Stayfast - Tan/Black	**$489.99**
7917	63-67 Convertible Top - Stayfast - Dark Blue	**$489.99**

Convertible Tops Kits

7911	63-67 Convertible Top Kit - Black	**$251.99**
7912	63-67 Convertible Top Kit - White	**$251.99**
7913	63-67 Convertible Top Kit - Tan	**$251.99**
7914	63-67 Convertible Top Kit - Teal	**$611.99**

800-458-3475
CorvetteAmerica.com

WARNING: Cancer and Reproductive Harm — www.P65Warnings.ca.gov

Interior Dye *Made by Corvette America!*

Interior Dye formulated & mixed by us! Use Corvette America's Interior Dye & get accurate color & solid coverage on leather, vinyl, fiberglass, plastic & metal.

4319_	Interior Dye - 12 oz. Aerosol	$19.99
4321_	Interior Dye - Quart	$82.99
49720	Interior Dye Adhesive Promoter	$31.99
49721	Interior Dye Clear Coat	$31.99
49722	Interior Dye Surface Prep	$21.99
8568	Interior Spray Adhesive	$29.99
432000	Primer - 12 oz. Aerosol	$20.99
432100	Primer - Quart	$30.99

Interior Dyes Corvette America's Interior Dye produces accurate color and solid coverage on leather, vinyl, fiberglass, plastic and metal. Available in a 12-oz. Aerosol spray or Quart. Use your interior Color Code to complete the part number.
Dye Surface Prep Use our Surface Prep to remove dirt, oils and residue before priming. Fast drying and ready to paint in minutes.
Adhesive Promoter Promotes strong, even adhesion of topcoat material when repairing or refinishing plastics. Also works on most flexible or rigid plastics on painted surfaces.
Primer For best results, finish off your prep work with our quality primer. Promotes even paint coverage and a better finish.
Spray Adhesive Our high-tack Interior Spray Adhesive is easy to work with and produces a strong bond between hardparts & materials.
Interior Dye Clear Coat Protect your reconditioning work for years to come with our Interior Clear Coat. Covers your interior components with a smooth, protective finish & preserves your interior's color.

Corvette America's INTERIOR Package THE ORIGINAL

Call Today & SAVE on an Interior Package!

Get discounts on Interiors & Parts when you order an Interior Package!

We Manufacture the Best Quality Corvette Products at our facility in Reedsville, Pennsylvania.

Corvette America

American Made for an American Classic.

WARNING: Cancer and Reproductive Harm — www.P65Warnings.ca.gov

Serving the Corvette Community Since 1977.

Air Cleaners

#20880 1963
250/300 hp

#20881 1963 - 340 hp

#20882 1964
250/300 hp

#20883 1964
350/365 hp

#29751 1964-65 - 250/300 hp w/ AC

#22389 1964-67
Flame Arrestor

#20871 1965
Air Cleaner - 350/365 hp

#42024 1964-65
Air Cleaner Base - 250/300 hp

1963-1965 Air Cleaners

20880	63	Air Cleaner - 250 / 300 - w/o AC	$351.99
20881	63	Air Cleaner - 340 hp	$362.99
20882	64	Air Cleaner - 250 / 300 hp - w/o AC	$352.99
29751	64-65	Air Cleaner - 250 / 300 hp - w/ AC	$524.99
20883	64	Air Cleaner - 350 / 365 hp	$397.99
20890	65	Air Cleaner - 250 / 300 hp - w/o AC	$352.99
20871	65	Air Cleaner - 350 / 365 hp w/ Element	$396.99
42022	63	Air Cleaner Base - 250, 300 hp - w/o AC	$244.99
42023	63	Air Cleaner Base - 340 hp	$219.99
42027	64-65	Air Cleaner Base - 250 / 300 hp - w/ AC	$336.99
42024	64-65	Air Cleaner Base - 250 / 300 hp - w/o AC	$240.99
42025	64-65	Air Cleaner Base - 350 / 365 hp	$182.99
51156	63-65	Air Cleaner Element - Paper Replacement	$9.99
29759	63-65	Air Cleaner Element Screen - 327	$34.99
27207	63-65	Air Cleaner to Carb. Gasket - 1x4 WCFB / AFB	$2.99
28955	64-67	Air Cleaner to Carb. Gasket - Holley & Quadra Jet	$2.99
32934	63-65	Air Cleaner Foam only	$32.99
32933	63-65	Air Cleaner Lid - 327	$113.99
32938	65	Air Cleaner Lid - 327 - Black Silk Label	$113.99
32935	63-65	Air Cleaner Screen only	$36.99
42037	63-65	Air Cleaner Snorkles - 250 / 300 hp - pr	$158.99
42031	63-65	Air Cleaner Stud - Hex	$7.99
32936	63-65	Air Cleaner Stud - WCFB / AFB	$7.99
50453	63-65	Air Cleaner Top - X-Stream K&N - Chrome	$96.99
50454	63-65	Air Cleaner Top - X-Stream K&N - Black	$75.99
28712	63-67	Air Cleaner Wingnut - Chrome	$1.99
51492	63-67	Air Cleaner Wingnut - NCRS Correct	$9.99
29752	64-65	Crankcase Vent Tube - 250 & 300 hp	$57.99
29753	64-67	Crankcase Vent Tube - 350 & 365 hp	$57.99
32924	63-64	Crankcase Vent Tube - 63 All - 64 Early w/ FI	$19.99
32925	63	Crankcase Vent Tube Hose & Grommet Kit	$12.99
32931	64-67	Crankcase Rear Vent Tube Hose Kit - 327	$8.99
40529	64-67	Crankcase Vent Bolt & Seal Kit only	$6.99
22389	64-67	Flame Arrestor	$10.99
32940	65-67	Hose - Air Cleaner to Breather Tube - Straight	$4.99
1896	64-65	Oil Filler Tube - Black	$22.99
1897	64-65	Oil Filler Tube - w/ SHP Fuel Injection - Chrome	$31.99
28359	64-67	Oil Filler Tube Cap - Chrome	$12.99
42034	63	PC Valve - Fuel Injection	$32.99
32926	63	PC Valve - on back of Carburetor	$48.99
K1323	64-67	PC Valve Clamps only	$1.99
42035	63	PC Valve Fitting - Fuel Injection - in Plenum	$10.99
32927	63	PC Valve Fitting - w/o AC & w/o PB	$11.99
32928	63	PC Valve Fitting - w/ PB	$46.99
32929	63	PC Valve Fitting - w/ AC	$46.99
32930	63	PC Valve Fitting - w/ AC & w/ PB	$72.99
42033	64-65	PC Valve Fitting - Holley	$33.99
33052	64-65	PC Valve Hose w/ Logo	$16.99
33142	64-65	PC Valve Vac. Restrict. Fitting - AFB, WCFB, FI	$18.99
34848	64-66	PC Valve Hose Clip - Correct for 64-65 327 - 250 / 300 hp & 66 427 - 425 hp	$15.99
34845	64-65	PC Valve Hose & Clamps	$12.99
34843	63	Vent Hose - Oil Tube to Air Cleaner	$6.99
27411	63-65	Vent Tube Stud	$2.99

800-458-3475
CorvetteAmerica.com

WARNING: Cancer and Reproductive Harm — www.P65Warnings.ca.gov

1963 250 & 300 HP AIR CLEANERS

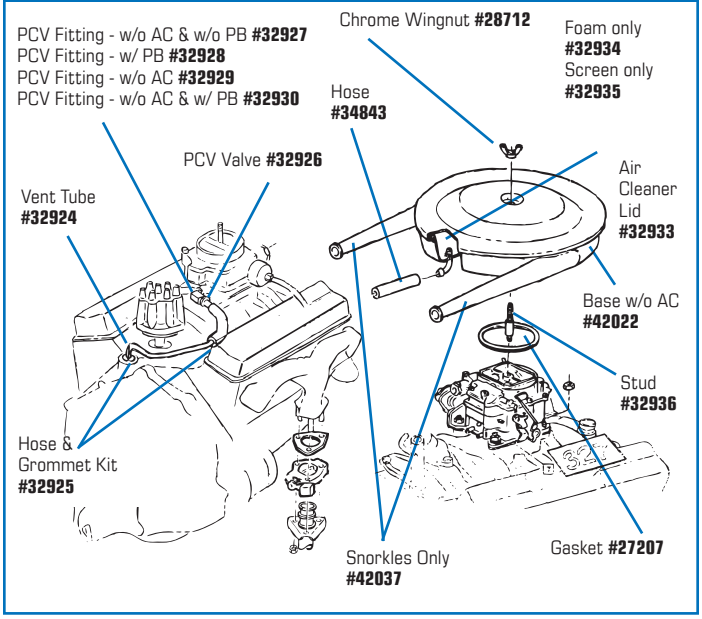

1964-65 250 & 300 HP AIR CLEANERS

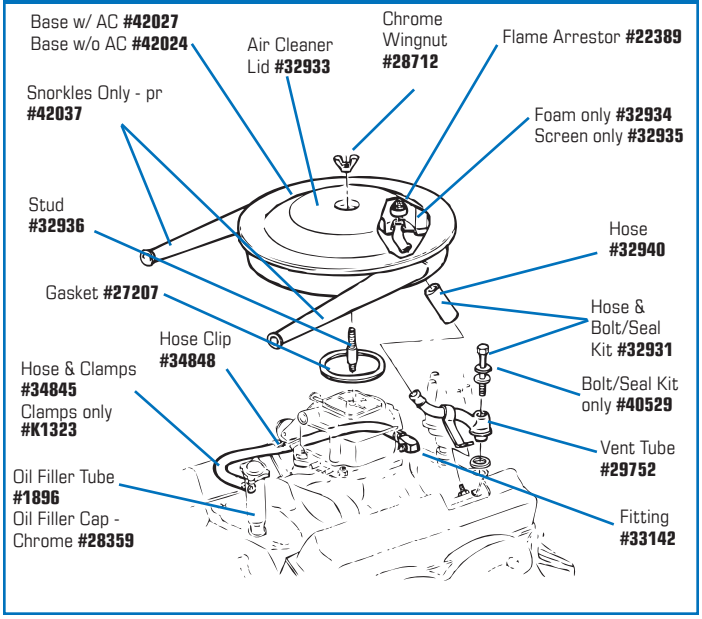

1963 340 HP AIR CLEANERS

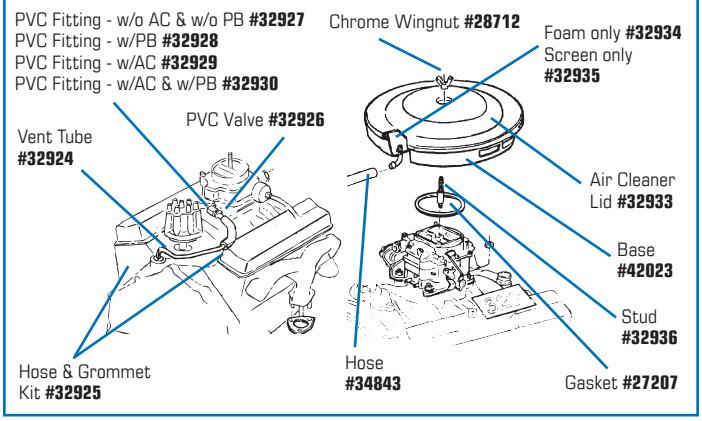

1964-65 350 & 365 HP AIR CLEANERS

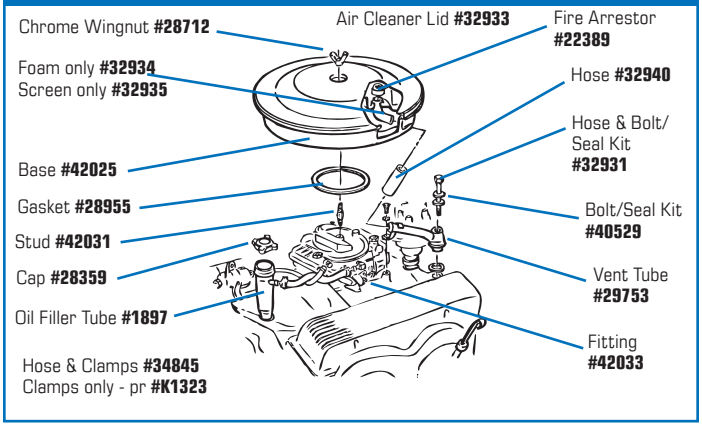

1965 396/425 HP Air Cleaners

20884	65	Air Cleaner - 396	$165.99
32937	65	Air Cleaner Lid - 396 - Black	$83.99
51277	65	Air Cleaner Lid - 396 - Black - Replacement	$41.99
0305	65	Air Cleaner Decal - 396 / 425 hp Turbo-Jet	$4.99
29757	65-67	Air Cleaner Wingnut - Black - Correct for 65 396	$7.99
28955	64-67	Air Cleaner to Carburetor Gasket - Holley & Quadra Jet	$2.99
51156	63-65	Air Cleaner Element - Paper Replace	$9.99
28953	64-67	Air Cleaner Stud - Holley - Round	$5.99
51492	63-67	Air Cleaner Wingnut - NCRS Correct	$9.99
50465	65-67	Air Filter - K&N	$70.99
29758	65	Crankcase Vent Tube - 396	$30.99
32939	65	Crankcase Vent Tube Grommet	$21.99
22389	64-67	Flame Arrestor	$10.99
32942	65-67	Grommet - Valve Cover	$4.99
32940	65-67	Hose - Air Cleaner to Breather Tube - Straight	$4.99
32941	65-67	Vent Tube Elbow - Breather Tube to Valve Cover	$19.99
41730	65	Vent Tube Fitting - on Carburetor - 396	$3.99

#20884

1965 396 & 425 HP AIR CLEANERS

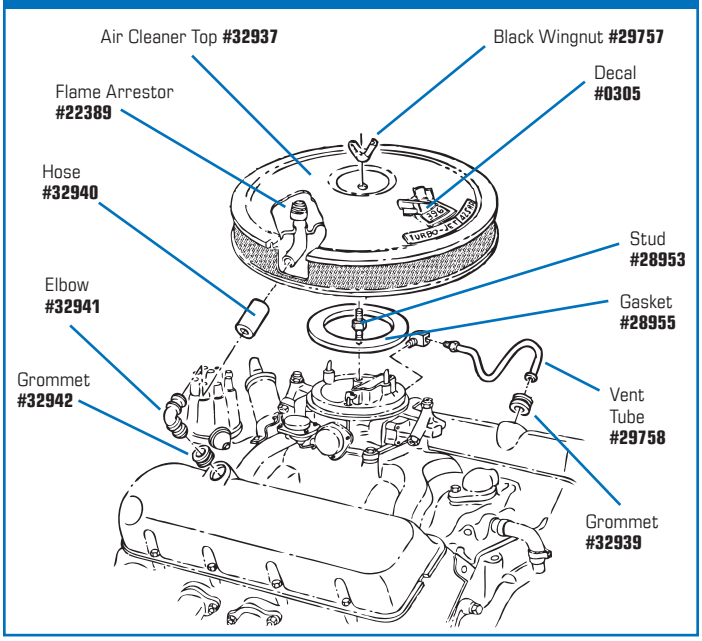

WARNING: Cancer and Reproductive Harm — www.P65Warnings.ca.gov

#20885 1966-67 327 Air Cleaner

#20886 1966-67 427 Air Cleaner

#X2043 1966-67 Chrome Air Cleaner Lid

#1768 1966-67 Air Cleaner Base - 327 - w/o A.I.R.

#20887 1967 Air Cleaner - 427 3x2

#29761 1967 Air Cleaner Base - 3x2

1966-1967 AIR CLEANERS

20885	66-67	Air Cleaner - 327	$172.99
20886	66-67	Air Cleaner - 427 - Exc. 3x2 - including Paper Element - part #**33450**	$132.99
51276	66-67	Air Cleaner - 427 - Exc. 3x2 & LT1	$128.99
20887	67	Air Cleaner - 427 - 3x2	$305.99
42028	66	Air Cleaner Base - 327 - w/ A.I.R	$134.99
42029	67	Air Cleaner Base - 327 - w/ A.I.R	$132.99
1768	66-67	Air Cleaner Base - 327 - w/o A.I.R.	$65.99
29761	67	Air Cleaner Base - 3x2	$223.99
42030	66-67	Air Cleaner Base - w/ A.I.R - 390 hp	$134.99
25619	66-67	Air Cleaner Base - w/o A.I.R - Correct	$70.99
K1466	67	Air Cleaner Bolts - Base to Carb. - 3x2	$5.99
29760	67	Air Cleaner Cover - 3x2	$132.99
0306	66	Air Cleaner Decal - 427 / 425 hp Turbo-Jet - pr	$4.99
37032	66	Air Cleaner Decal - 427 / 450 hp Turbo-Jet - pr	$4.99
0307	66-67	Air Cleaner Decal - 427 / 390 hp Turbo-Jet - pr	$4.99
0308	67	Air Cleaner Decal - 427 / 400 hp Turbo-Jet - pr	$4.99
X2043	66-67	Air Cleaner Lid - Chrome - Fits All Exc. 427 3x2	$47.99
51325	66-67	Air Cleaner Lid - Chrome - w/ Silk Screen	$123.99
33450	66-67	Air Cleaner Element - Paper - Replacement	$11.99
2507	67	Air Cleaner Filter - 3x2 - Foam only - for use w/ part **#20887** Tri-Power Air Cleaner	$24.99
22389	64-67	Air Cleaner Flame Arrestor	$10.99
28955	64-67	Air Cleaner to Carb. Gasket - Holley & Quadra Jet	$2.99
28960	67	Air Cleaner to Carb. Gaskets - 3x2 - 3 pc set	$10.99
32944	67	Air Cleaner Hose - to LH Valve Cover	$16.99
32945	67	Air Cleaner Hose Clamp - to LH Valve Cover	$1.99
32943	67	Air Cleaner Screen - 3x2	$45.99
28953	64-67	Air Cleaner Stud - Holley - Round	$5.99
28962	67	Air Cleaner Stud - 3x2 & L88	$5.99
29757	65-67	Air Cleaner Wingnut - Black - Correct	$7.99
28712	63-67	Air Cleaner Wingnut - Chrome	$1.99
51492	63-67	Air Cleaner Wingnut - NCRS Correct	$9.99
50465	65-67	Air Filter - K&N	$70.99
50464	67	Air Filter Element w/ 3x2 - K&N	$94.99
29755	66-67	Crankcase Rear Vent Tube - 300 hp	$57.99
29753	64-67	Crankcase Rear Vent Tube - 350, 365 hp	$57.99
40529	64-67	Crankcase Rear Vent Tube Bolt & Seal Kit	$7.99
32931	64-67	Crankcase Rear Vent Tube Hose, Bolt & Seal Kit	$8.99
32942	65-67	Grommet - For LH Valve Cover - 427	$4.99
32940	65-67	Hose - Air Cleaner to Breather Tube - Straight	$4.99
49530	67	Hose Clamp - Air Cleaner to Valve Cover	$9.99
50525	67	Hose Clamp - 3x2	$8.99
28360	66-67	Oil Filler Tube Cap - 300 hp - Black	$11.99
28361	66-67	Oil Filler Tube Cap - 350 hp - Chrome	$10.99
1898	66-67	Oil Filler Tube - 300 hp - Black	$24.99
1899	66-67	Oil Filler Tube - SHP - 350 hp - Chrome	$33.99
42036	66-67	PCV Valve	$5.99
33054	66-67	PCV Valve - 327	$48.99
32947	67	PCV Valve - RH	$4.99
33476	67	PCV Hose - RH - 427 w/ 3x2	$11.99
K1323	64-67	PC Valve Clamps only	$1.99
32948	66-67	PC Valve Grommet - For 427 / 454 Valve Cover	$2.99
32946	66-67	PC Valve Hose & Clamps - RH side of Carb. to LH Valve Cover - 427 / 454 Exc. 3x2	$26.99
34846	66-67	PC Valve Hose & Clamps	$16.99
34848	66	PC Valve Hose Clip - 425 hp	$15.99
34849	66-67	PC Valve Hose Clip - on Carb. Bolt - 390 hp	$15.99
34850	66-67	PC Valve Hose Clip - on Intake Bolt - 390 hp	$15.99
32941	65-67	Vent Tube Elbow - Breather Tube to Valve Cover	$19.99

1966-67 327 HP AIR CLEANERS

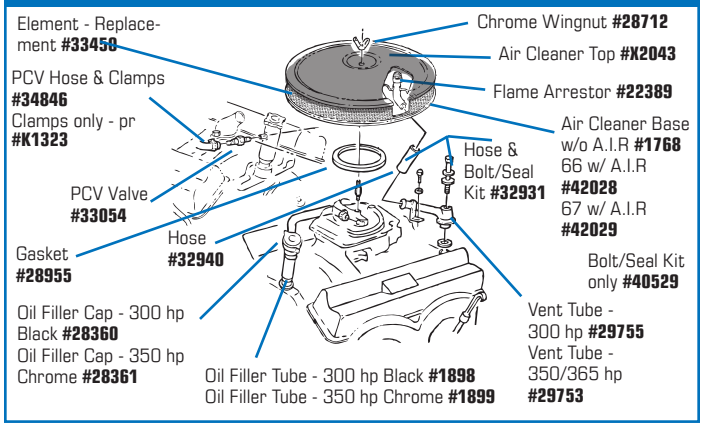

1966-67 427 HP AIR CLEANER - EXCEPT 3X2

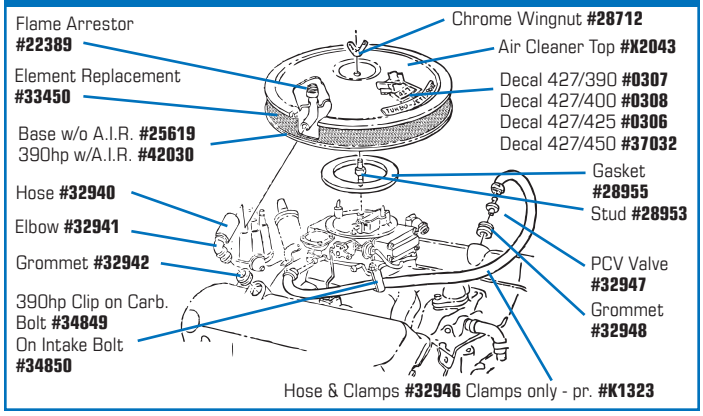

800-458-3475
CorvetteAmerica.com
WARNING: Cancer and Reproductive Harm — www.P65Warnings.ca.gov

1967 427 3X2 HP AIR CLEANER

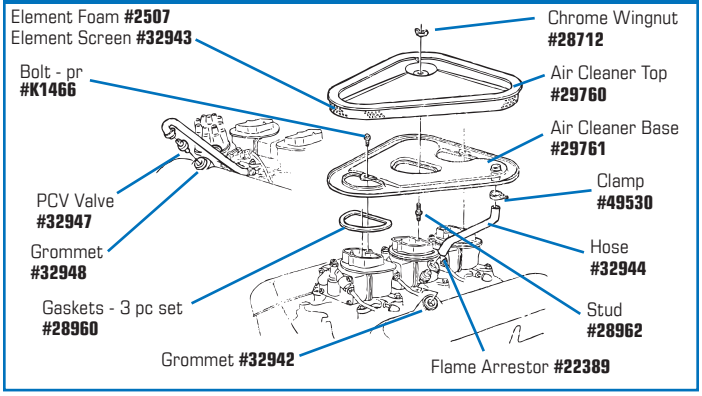

1967 L88 Air Cleaner

41732	67	Air Cleaner Base - L88	$70.99
40821	67	Air Cleaner Lid - L88	$42.99
28712	63-67	Air Cleaner Wingnut - Chrome	$1.99
40825	67	Air Cleaner Element - Foam - L88 in Hood	$17.99
40824	67	Air Cleaner Screen - L88 on Air Cleaner Base	$15.99
40822	67	Air Cleaner Screen - L88 - in Hood	$50.99
28955	67	Air Cleaner to Carburetor Gasket - L88 - Holley & Quadra Jet	$2.99
40823	67	Air Cleaner Seal - L88 Base to Hood	$17.99
28962	67	Air Cleaner Stud - 3x2 & L88	$5.99
1032	67	A.I.R. Pump - Rebuilt	$126.99

Battery

#25325 1963-65 Battery Tray Kit - w/o AC

#X2567 1963-66 Cadmium Plated Battery Tray Shield/Retainer

#K1221 Battery Retainer Hold Down Kit

Battery Components

K1365	63-67	Battery Access Cover w/ AC Lower Bolts - 2 pc	$1.99
36961	63-67	Battery Access Cover w/ AC Bolts - 6 pc	$12.99
29776	63-67	Battery Access Cover w/ AC or 396	$171.99
29777	63-67	Battery Access Cover Bolt & Nut Kit	$27.99
29778	63-67	Battery Access Cover Gasket	$6.99
K1205	63-66	Battery Hold Down Wingnuts - pr	$1.99
1006	63-67	Battery Retainer, AC & 396	$28.99
28972	67	Battery Retainer Bolt	$0.99
K1220	63-67	Battery Retainer Hold Down Kit - w/ AC or 396 - J-Bolts & Wingnuts	$11.99
K1221	63-66	Battery Retainer Hold Down Kit - w/o AC - J-Bolt, Stud, Spacers & Wingnuts	$15.99
25301	63-66	Battery Retainer Rubber Spacers - 4 pc	$4.99
1653	67	Battery Retainer with Bolt - w/o AC	$8.99
1652	67	Battery Shield - w/o AC	$24.99
1551	63-67	Battery Tray - AC & 396	$52.99
1550	63-65	Battery Tray - w/o AC	$50.99
39881	66	Battery Tray - w/o AC	$50.99
1552	67	Battery Tray - w/o AC	$48.99
0609	63-67	Battery Tray J-Bolt	$3.99
25324	63-67	Battery Tray Kit - w/ AC & 65 396	$97.99
25325	63-65	Battery Tray Kit - w/o AC	$81.99
39886	66	Battery Tray Kit - w/o AC	$101.99
25326	67	Battery Tray Kit - w/o AC	$96.99
X2621	63-66	Battery Tray Shield / Retainer - Black	$30.99
1005	63-66	Battery Tray Stud - w/o AC	$6.99

1963-67 W/AC & 1965 396 BATTERY ACCESS

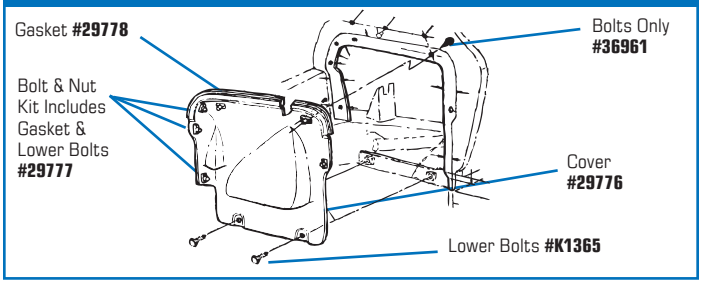

1963-67 BATTERY TRAY W/ AC & 1965 396

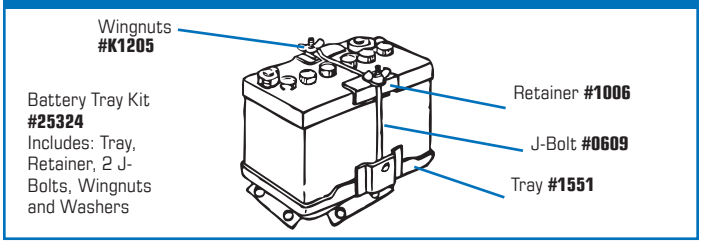

1963-66 BATTERY TRAY W/O AC

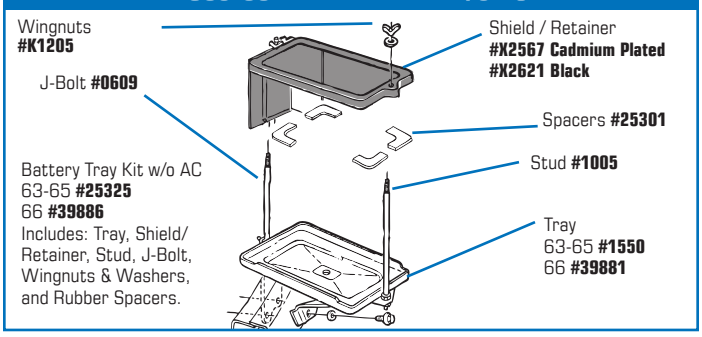

1967 BATTERY TRAY W/O AC

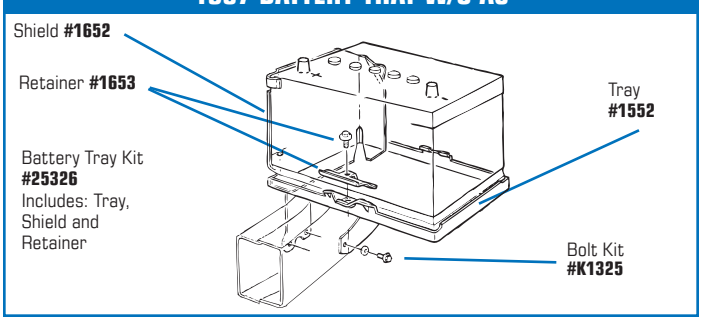

WARNING: Cancer and Reproductive Harm — www.P65Warnings.ca.gov

#20672

#25030

Battery Cables

20673 63 Battery Cables - 327 w/ AC - pr $102.99
20672 63-65 Battery Cables - 327 w/o AC - pr..... $102.99
20674 64-65 Battery Cables - 327 w/ AC & 396 - pr $102.99
20675 66-67 Battery Cables - 327 w/o AC - pr..... $102.99
20677 66-67 Battery Cables - 427 w/o AC - pr..... $102.99
20676 66-67 Battery Cables - 327, 427 w/ AC - pr..... $102.99

Additional Battery Components

33228 63-67 Battery Cable to Firewall Clip - w/ AC..... $2.99
36960 63-66 Battery Cable to Shield Clamp $10.99
25030 63-67 Battery Disconnect Switch - Top Post Model..... $9.99
0005 63-67 Battery Terminal Felt $1.99
K1325 63-67 Battery Tray to Frame Bolt Kit - 6 pc $4.99

Belts

Wrapped style

Replacement — cut style

***REPRODUCTION BELTS* — 1963-1967 Original GM Belts were Wrapped design.** Include: GM Emblem, GM Part Number, Broadcast Code (where applicable), Belt Size (where applicable), Manufacturer's Symbol and Construction Codes.

Note: Cut Style belts have visible cords showing. Wrapped Style belts have a cloth-like material wrapping the belts.

***REPLACEMENT BELTS* — 1963-1967 Replacement Belts** can be either Cut Style or Wrapped Style belts & will not include GM part number or any markings that were on the original belts. Replacement Belts are strictly a functional replacement.

Reproduction Belts - A.I.R. Pump

36986 66-67 A.I.R. Pump Belt - 300 hp w/ AC; 350 hp w/ AC & PS - GM # 3883252 ..... $27.99
36985 66-67 A.I.R. Pump Belt - 300 hp w/o AC GM#3883248 $27.99
36987 66-67 A.I.R. Pump Belt - 350 hp w/ AC GM#3850803 . $27.99
36276 66-67 A.I.R. Pump Belt - 350 hp w/o AC - w/ PS GM#3883250 ..... $27.99
51576 66 A.I.R. Pump Belt - 427 w/ AC - GM#3889382.... $42.99
36988 66-67 A.I.R. Pump Belt - 427 w/o AC GM#3861966 .... $27.99
51577 67 A.I.R. Pump Belt - 427 w/ AC - GM#3861966.... $60.99

Repro. Belts - Alternator / Generator / Idler

36963 63 Alternator Belt - 250 / 300 hp GM#3759221 .... $27.99
36964 63-65 Alternator Belt - 63 340 / 360 hp; 65 375 hp FI GM#3843162 ..... $27.99
36969 64 Alternator Belt - 365 hp w/o AC & 375 hp FI GM#3847707 ..... $27.99
36968 64-65 Alternator Belt - 250 / 300 hp w/o AC GM#3847701 ..... $31.99
36970 64-65 Alternator Belt - 350/365hp w/AC GM#3847702 $27.99
36973 64-65 Alternator Belt - 365 hp w/o AC GM#3871257 .. $27.99
36271 64-67 Alternator Belt - 64-65 250 / 300 hp w/ AC; 66-67 300 hp w/o AC; 66-67 300 / 350 hp w/ A.I.R. GM#3848263 ..... $37.99
51578 65-67 Alternator Belt - 327 - Reproduction $37.99
36974 65 Alternator Belt - 425 hp w/o PS GM#3863103 .. $27.99
51585 65-67 Alternator Belt - 427 hp GM #3878243 ..... $28.99
36978 66-67 Alternator Belt - 300/350hp w/AC GM#3798498 ..... $27.99
36258 66-67 Alternator Belt - 390 / 400 hp w/ AC & PS GM#3883979 ..... $28.99
36980 66-67 Alternator Belt - 390 / 400 hp w/ AC & w/o PS GM#3889378 ..... $27.99
36979 66-67 Alternator Belt - 427 w/o AC & w/o PS GM#3882814..... $27.99
22660 63 Generator Belt - All Except High Lift Cam $35.99
22673 63-65 Generator Belt - 63 340 / 360 hp; 65 375 hp GM#3843162 ..... $47.99
51567 64 Generator Belt - 350 hp w/ AC GM # 3798498.. $39.99
22680 63-64 Idler Belt - GM#3843164 ..... $38.99
36976 65 Idler Belt - 365 / 375 hp - GM#3871258..... $27.99

Reproduction Belts - Power Steering

36966 63 Power Steering Belt - GM#3759224 ..... $27.99
36971 64 Power Steering Belt - GM#3848263..... $27.99
36273 65-67 Power Steering Belt - 65 327; 66-67 300 hp; 66-67 350 hp w/ AC - GM#3871257 ..... $27.99
51572 65-67 Power Steering Belt - BB - GM#3878244..... $34.99
36983 66-67 Power Steer. Belt - 350hp w/o AC GM#3861936 $27.99
36984 66-67 Power Steer. Belt - 427 w/AC GM#3889380..... $27.99

Reproduction Belts - Water Pump

51566 63 AC Compressor Belt - GM # 3840397 ..... $42.99
51569 64-65 AC Compressor Belt - 327 GM # 3847705..... $42.99
51571 65 AC Compressor - 327 - SB - GM # 3849085..... $42.99
51574 66-67 AC Compressor - 327 - SB 300 / 350 hp w/ PS GM # 3880858 ..... $42.99
51573 66-67 AC Compressor - 327 - SB 300 / 350 hp w/o PS GM # 3847705..... $42.99
51575 66-67 AC Compressor - 427 - BB - GM # 3889376..... $41.99
22681 64 Water Pump w/ SHP - GM#3845643..... $40.99
22683 65-67 Water Pump - BB - 65-66 396 / 427 w/o AC; 67 327 w/SHP w/o AC & PS; 67 427 w/SHP GM#3837810..... $60.99
36977 65-67 Water Pump - 65 396; 66-67 350 hp w/o AC or PS; 66-67 427 w/o AC GM#3837810 ..... $27.99
36262 66-67 Water Pump - 427 w/ AC GM#3889374 ..... $27.99
51565 63-65 Water Pump / Idler - 327 SB - GM # 3843164 .. $31.99
51570 64 Water Pump / Idler - 327 SB; 350 / 365 hp - GM # 3871258..... $32.99
51568 64 Water Pump / Idler - 327 & 365 hp - GM # 3845643 ..... $32.99

800-458-3475
CorvetteAmerica.com
WARNING: Cancer and Reproductive Harm — www.P65Warnings.ca.gov

Replacement Belts - A.I.R. Pump

22684	66-67	A.I.R. Pump Belt - 300 hp w/o AC	$15.99
22685	66-67	A.I.R. Pump Belt - 350 hp w/o AC	$13.99
22686	66-67	A.I.R. Pump Belt - 300 hp; 327 hp w/ AC; 350 hp w/ PS	$13.99
22687	66-67	A.I.R. Pump Belt - 390 hp w/o AC	$13.99

Replace. Belts - Alternator / Generator / Idler

22666	64-67	Generator Belt - 250 / 300 hp; 64-65 300 hp w/ AC; 66-67 300 hp w/o AC	$15.99
22667	65	Generator Belt - 425 hp w/o PS	$13.99
22668	65	Generator Belt - w/ SHP & w/o AC	$15.99
22670	66-67	Generator Belt - 390 / 425 hp w/o AC & PS	$15.99
22669	65-67	Generator Belt - BB - 396 / 427 w/o AC & w/ PS	$15.99
22671	66-67	Generator Belt - BB - 425 hp w/AC & PS	$15.99
22672	66-67	Generator Belt - BB - 66 390 hp w/AC & w/o PS; 67 All 427 w/ AC & w/o PS	$13.99

Replacement Belts - Power Steering

22674	66-67	Power Steering Belt - 300 & 350 hp w/o AC	$15.99
22677	66-67	Power Steering Belt - 390 & 425 hp w/ AC	$15.99
22675	66-67	Power Steering Belt - SB - 300 / 350 hp w/ AC	$15.99
22676	65-67	Power Steering Belt - BB - 65-66 425 hp w/o AC; 67 390 hp w/o AC	$15.99

Replacement Belts - Water Pump

22678	64-67	AC Compressor Belt - 327 w/o PS	$15.99
22679	66-67	AC Compressor Belt - SB - 327 hp w/ PS	$15.99
22682	65	Water Pump Belt - w/ SHP & Fuel Injection	$15.99

Brakes

Brake Pedal

30034	63-67	Brake Light Switch	$9.99
K1354	63-67	Brake Light Switch Mount Nuts - pr	$2.99
34852	63-66	Brake Pedal - Manual	$131.99
34855	67	Brake Pedal - Auto	$131.99
34854	67	Brake Pedal - Manual	$130.99
28873	63-67	Brake Pedal Bumper	$2.99
32964	63-67	Brake Pedal Clevis Pin	$5.99
40830	63-67	Brake Pedal Clevis Pin Bowed Washer	$1.99
32965	63-67	Brake Pedal Clevis Pin Retainer	$3.99
34858	63-67	Brake Pedal to Master Cylinder Push Rod Clevis	$24.99
29949	63-67	Brake Pedal Pivot Bushing	$2.99
32966	63-67	Brake Pedal Push Rod	$6.99
34857	63-67	Brake Pedal Push Rod / Clevis Lock Nut	$0.99
32962	63-66	Brake Pedal Return Spring	$5.99
32963	67	Brake Pedal Return Spring	$5.99
42103	63-66	Brake Pedal Return Spring Bushing	$4.99
42104	67	Brake Pedal Return Spring Bushing	$1.99
34856	63-67	Brake Pedal Shaft - Auto	$19.99
29849	63-67	Brake Pedal Shaft Retainer	$2.99
42048	67	Brake Proportioning Valve	$115.99
34889	66	Proportioning Valve Bracket - J56	$98.99
34890	67	Proportioning Valve Bracket - J56	$86.99
32956	67	Proportioning Valve Bracket - Regular	$32.99
34891	67	Proportioning Valve to Bracket Screw	$3.99

WIN CORVETTE PRIZES!

Follow us for your chance to win.

1963-67 BRAKE PEDAL

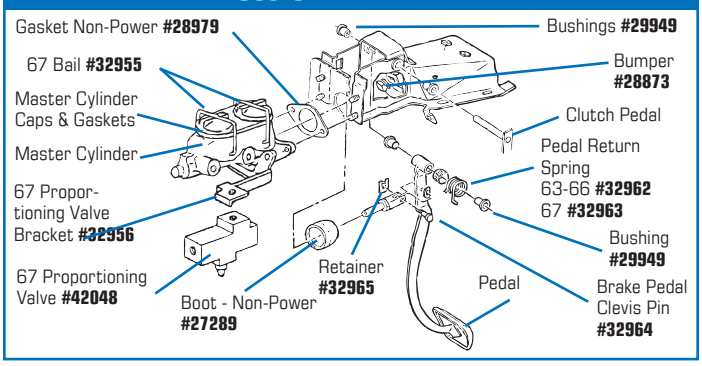

#49615 1967 Master Cylinder MB - Correct

#41383

#1542

Master Cylinders

49613	63	Master Cylinder - MB - Correct	$189.99
49614	63	Master Cylinder - PB - Correct	$189.99
1542	63-64	Master Cylinder - Manual / Power - Replacement	$104.99
51053	63-65	Master Cylinder - Pwr Brake - Remanufactured	$91.99
49625	65	Master Cylinder - PB - Correct 65E	$844.99
44885	65	Master Cylinder - w/ PB - Replacement	$72.99
1543	65-66	Master Cylinder - Manual	$116.99
49624	65-66	Master Cylinder - PB - Correct 65L	$791.99
1544	67	Master Cylinder - Manual	$84.99
1545	67	Master Cylinder - PB & Heavy Duty	$75.99
41383	67	Master Cylinder - w/ PB & Heavy Duty - Chrome	$239.99
49615	67	Master Cylinder - MB - Correct	$161.99

Additional Master Cylinder Components

42038	64-67	Mast. Cyl. Adp. Fitting - 1/2-20 - 3/8-24 Threads	$10.99
42039	64-67	Master Cyl. Adaptor Fitting - 9/16-18 Threads	$10.99
32953	63-67	Master Cylinder Adjusting Clevis	$16.99
32955	67	Master Cylinder Bail	$3.99
51047	63-67	Master Cylinder Bleeder Tool	$37.99
42089	63-67	Master Cyl. Bleeder Screw - 63-64 PB & 67 All	$4.99
34880	63	Master Cylinder Cap Cover & Washer	$31.99
42088	64	Master Cylinder Cap, Bail & Seal	$30.99
32950	65-66	Master Cylinder Cap - Non-Power	$37.99
32952	65-66	Master Cylinder Cap - Power - Replacement	$16.99
36322	67	Master Cylinder Cap	$12.99
49620	67	Master Cylinder Cap - Correct	$33.99
51104	67	Master Cylinder Cap - Chrome	$19.99
32954	67	Master Cyl. Cap w/ Bails - Vented w/ Gasket	$30.99

Continued on the next page.

Continued from the previous page.

44906 67 Master Cylinder Cap - Chrome - w/ Bails & Gasket $30.99
32949 63 Master Cylinder Cap Gasket $4.99
36990 64 Master Cylinder Cap Gasket $11.99
32951 65-66 Master Cylinder Cap Gasket - Non-Power $17.99
28709 67 Master Cylinder Cap Gasket $6.99
34881 63 Master Cylinder Cap Hex Head Screw - w/ PB..... $28.99
34882 63 Master Cylinder Cap Thumb Screw - w/o PB $16.99
28979 63-67 Master Cylinder to Firewall Gasket - Non-Power.... $3.99
K1274 63 Master Cylinder Mount Nuts & Washers - 4 pc $1.99
36321 64-67 Master Cylinder Mount Nuts & Washers - 4 pc $1.99
50940 65-66 Master Cylinder Seal Kit w/o PB $8.99
29779 63-64 Master Cylinder Rebuild Kit $35.99
29780 65-66 Master Cylinder Rebuild Kit - Non power $40.99
36993 65-66 Master Cylinder Rebuild Kit - PB - No Piston..... $55.99
42090 65-66 Master Cylinder Rebuild Kit - PB w/ Pistons..... $51.99
29781 67 Master Cylinder Rebuild Kit - w/o PB..... $40.99
29782 67 Master Cylinder Rebuild Kit - w/ PB $35.99
27289 63-67 Master Cylinder Rod Boot - w/o PB $6.99

DUAL MASTER CYLINDER CONVERSION KIT

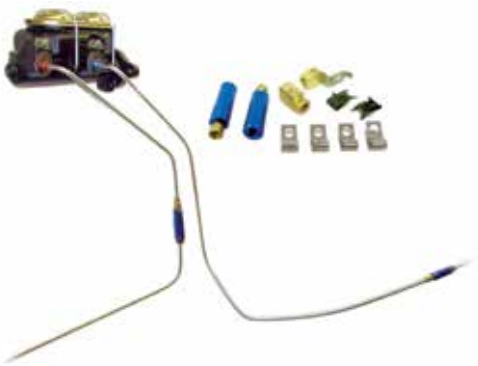

Everything you need to convert 1963-64 Corvettes from a single reservoir drum brake system to a safer dual master cylinder system. **Includes**: New Master Cylinder, 2 Check Valves, Front Master Cylinder Brake Line, Front to Rear Brake Lines w/Union, Brass Brake Line Junction Blocks and Line Clips.

42563 63-64 Dual Master Cylinder Conversion Kit $325.99

DUAL MASTER CYLINDER CONVERSION KIT

Easy Installation "Body On" Dual Master Cylinder Conversion Kit for 1965-66 Corvettes with Disc Brakes. Top quality complete kit includes "everything" needed to convert from a single reservoir brake system to a safer dual master cylinder system. The front to rear brake line is made in 2 pieces for a much easier body on installation. **Includes**: New Master Cylinder, Master Cylinder Front Brake Line, Front to Rear Brake Line with Union, Brass Brake Line Junction Blocks, Front to Rear Brake Line Clips & Master Cylinder Line Clips.

42564 65-66 Dual Master Cylinder Conversion Kit $295.99

#43255 1964-67 PB Booster - Reproduction

#42092 PB Booster Replacement w/ Master Cylinder

POWER BRAKE BOOSTER

42091 63 Power Brake Booster - Replace. w/ Master Cyl $407.99
42092 64-67 Power Brake Booster - Replace. w/ Master Cyl $282.99
43255 64-67 Power Brake Booster - Reproduction $220.99
42472 63 Power Brake Booster Boot - Rear to Cowl $10.99
42470 64-67 Power Brake Booster Boot - Rear to Cowl $11.99
32957 64-67 Power Brake Booster Check Valve..... $18.99
32958 63-67 Power Brake Booster Check Valve Grommet..... $9.99
42475 64-67 Power Brake Booster Diaphragm $28.99
42474 63 Power Brake Booster Front Gasket & Cup $31.99
42471 63-67 Power Brake Booster Front Push Pin - SS..... $14.99
42477 63 Power Brake Booster Front Seal - Flat - In Cup ... $12.99
42467 64-67 Power Brake Booster Front Seal $16.99
42476 63-67 Power Brake Booster Interior Foam Bumper..... $3.99
34883 63-67 PB Booster Mounting Bracket w/ Bolts & Rivets . $17.99
42043 63-67 PB Booster Pedal Actuator Screw & Nut $8.99
42473 64-67 Power Brake Booster Rear Bearing $16.99
36996 63-67 Power Brake Booster Rear Felt Filter $4.99
42468 63-67 Power Brake Booster Silencers - pr $5.99
42469 63-67 Power Brake Booster Silencer Retaining Clip..... $0.99
36994 63-67 Power Brake Booster Upper Bolts - Correct - pr ... $5.99
32960 63 Power Brake Vacuum Hose & Clamp..... $10.99
32961 64-67 Power Brake Vacuum Hose & Clamp - Exc. 3x2..... $6.99
34851 67 Power Brake Vacuum Hose & Clamps - 3x2 ..... $10.99
36995 63 Power Brake Vacuum Hose Support Brkt w/o Fl .. $15.99

1963-67 POWER BRAKE BOOSTER

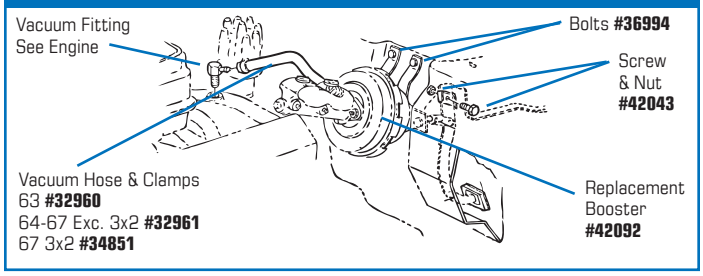

POWER BRAKE CONVERSION KIT

Converts 63-66 Vettes to 67 Style Brakes with Dual Master Cylinder for Greater Safety. Adds Power Brakes to Non-Power Brake Vettes. Includes Dual Cylinder Master Cylinder. Note: Will Not Fit 1963 with Original Hood without modification to the Hood.

33489 63-66 Power Brake Conversion Kit $478.99

800-458-3475
CorvetteAmerica.com
WARNING: Cancer and Reproductive Harm — www.P65Warnings.ca.gov

Brake Lines

All Brake Lines are pre-bent for correct fit and they come complete with the correct fittings. Brake Line Sets contain all the lines to replace the system from the master cylinder to the wheels. Connector blocks, clamp sets and flex hoses sold separately. Individual lines are also available.

Steel Brake Line Sets

8221	63-64	Steel Brake Line Set - w/o Power Brakes	$104.99
8222	63-64	Steel Brake Line Set - w/ Power Brakes	$104.99
42094	65	Steel Brake Line Set - w/ Drum Brake	$102.99
8223	65	Steel Brake Line Set - w/o Power Brakes - 3/16"	$104.99
8225	65	Steel Brake Line Set - Power Brakes - 3/16"	$104.99
8130	65-66	Steel Brake Line Set - Power Brakes - 1/4"	$104.99
8224	66	Steel Brake Line Set - w/o Power Brakes - 1/4"	$104.99
8226	67	Steel Brake Line Set - w/o Power Brakes	$110.99
8228	67	Steel Brake Line Set - Power Brakes	$104.99

Individual Brake Lines

42049	63-64	Brake Line - Master Cyl. to LF Block - w/o PB	$18.99
42050	63-64	Brake Line - Master Cyl. to LF Block - w/ PB	$18.99
42051	63-64	Brake Line - Master Cyl. to LF Block - w/ Z06	$26.99
42052	65-66	Brake Line - Master Cyl. to LF Block - w/o PB	$18.99
42053	65	Brake Line - Master Cylinder to LF Block - w/ Power Brake - 3/16"	$18.99
42054	65-66	Brake Line - Master Cylinder to LF Block - w/ Power Brake - 1/4"	$18.99
42055	67	Brake Line - Proportioning Valve to LF Block - w/o Power Brake	$20.99
42056	67	Brake Line - Proportioning Valve to LF Block - w/ Power Brake	$20.99
42057	67	Brake Lines - Master Cylinder to Proportioning Valve - pr	$26.99
42058	63-67	Brake Line - LF Block to Flex Hose	$8.99
42059	63-64	Brake Line - Master Cyl. to LR Block - w/o PB	$32.99
42060	63-64	Brake Line - Master Cyl. to LR Block - w/ Z06	$51.99
42061	65	Brake Line - Master Cylinder to LR Block - w/o Power Brake	$17.99
42062	65	Brake Line - Master Cylinder to LR Block - w/ PB 3/16"	$52.99
42063	65-66	Brake Line - Master Cylinder to LR Block - w/ PB 1/4"	$33.99
42064	66	Brake Line - Master Cyl. to LR Block - w/o PB	$17.99
42065	67	Brake Line - Proportioning Valve to LR Block - w/o Power Brake	$46.99
42066	67	Brake Line - Proportioning Valve to LR Block - w/ Power Brake	$33.99
42067	63-64	Brake Line - Rear Drum LH	$11.99
42068	63-64	Brake Line - Rear Drum RH	$11.99
42069	67	Brake Line - Rear Caliper Line LH	$11.99
42070	67	Brake Line - Rear Caliper Line RH	$11.99
29783	63-67	Brake Line - Front Crossover	$26.99
8156	63-67	Brake Line - Rear Crossover	$16.99
9865	63-67	Brake Line - Rear Crossover - Stainless Steel	$22.99
1759	65-66	Brake Lines - Rear Calipers - pr	$19.99
1761	65-66	Brake Lines - Rear Calipers - Stainless Steel - pr	$40.99

IN STOCK & READY FOR SHIPPING!

In addition to our regular delivery, we offer more options for getting your packages when you need them. Call our Sales Reps for details.

Stainless Steel Brake Line Sets

9856	63-64	Stainless Steel - w/o Power Brakes	$147.99
9857	63-64	Stainless Steel - w/ Power Brakes	$157.99
9858	65	Stainless Steel - w/o Power Brakes - 3/16"	$157.99
9901	65	Stainless Steel - w/ Power Brakes - 3/16"	$157.99
9860	65-66	Stainless Steel - w/ Power Brakes - 1/4"	$157.99
9859	66	Stainless Steel - w/o Power Brakes - 1/4"	$162.99
9861	67	Stainless Steel - w/o Power Brakes	$162.99
9863	67	Stainless Steel - w/ Power Brakes	$162.99

Brake Line Components

8124	63-65	Brake Line Block - LF Connector - 65 w/o PB	$20.99
8134	65	Brake Line Block - LF Connector - w/ PB 3/16"	$27.99
8126	66	Brake Line Block - LF Connector - w/o PB	$20.99
8125	65-67	Brake Line Block - LF Connector 65-66 w/ PB 1/4", 67 all	$20.99
8127	63-65	Brake Line Block - LR Connector - 63-64 all, 65 all w/o PB, 65 w/ PB 3/16"	$20.99
8128	65-67	Brake Line Block - LR - 65 w/ PB 1/4"	$20.99
8129	63-67	Brake Line Block - RR Connector	$12.99
42081	63-67	Brake Line Clip Rivet - Correct Green	$8.99
41094	63-66	Brake Line Clips - Front Crossover - pr	$7.99
44962	63-66	Brake Line Clips - 14 pc	$20.99
44963	67	Brake Line Clips - 16 pc	$17.99
34933	67	Brake Line Distributor Block / Switch Plug	$15.99
42071	63-66	Brake Hose - Front - Round End	$26.99
42072	67	Brake Hose - Front - Hex End - Import	$10.99
51931	67	Brake Hose - Front - Hex End - USA	$15.99
42073	63-67	Brake Hose - Rear - Import	$10.99
51932	63-67	Brake Hose - Rear - USA	$15.99
43354	63-67	Brake Hose Kit - Stainless Steel - 4 pc w/ Clips and Hardware - Street Legal	$104.99
X2570	63-67	Brake Hoses - Rubber - 4 pc - Import	$30.99
51930	63-67	Brake Hoses - Rubber - 4 pc - USA	$53.99
34877	63-67	Brake Hose Brkts on Trailing Arm - Weld-On - pr	$13.99
27302	63-67	Brake Hose Copper Washers - 4 pc	$4.09
42076	63-65	Clip - Brake Line Side Rail - 65 w/o PB -3 req'd	$4.99
42077	65	Clip - Brake Line Side Rail - w/ PB - 4 req'd	$4.99
42078	66-67	Clip - Brake Line Side Rail	$1.99
42079	63-67	Clip - Brake Line Rear Crossover Center	$3.99
42080	67	Clip - Brake Line Top Side Rail Near Cowl	$1.99
42082	63-65	Clip - Brake Line Below Master Cylinder	$5.99
51448	66-67	Clip - Brake Line Below Master Cylinder	$6.99
42075	67	Clips - Front Brake Line - pr	$1.99
34895	63-67	Rear Brake Line Block Brackets - Weld to Frame - pr	$15.99
8136	63-67	Spring Clip - Brake Hose to Connector	$1.09

Brake & Gas Line Clamp Sets

8141	63-65	Brake & Gas Line Clamp Set - Replace - 19 pc	$24.99
8142	66	Brake & Gas Line Clamp Set - Replace - 18 pc	$24.99
8143	67	Brake & Gas Line Clamp Set - Replace - 18 pc	$24.99
42083	63-65	Brake Line Clip & Screw Set - Correct	$56.99
42084	66	Brake Line Clip & Screw Set - Correct	$44.99
42085	67	Brake Line Clip & Screw Set - Correct	$40.99

WARNING: Cancer and Reproductive Harm — www.P65Warnings.ca.gov

#45605 1965-67 New Delco Caliper SPECIAL 2

#45610 1965-67 New Caliper - O-Ring

#45600 1965-67 New Caliper - Lip Seals

New Delco® Calipers with O-Rings

Brand new brakes with modern performance feature: New Stainless Steel Sleeves, New O-Ring Pistons, Seals, Springs, Dust Covers, Stainless Steel Bleeder Screws and Plugs. And they're individually pressure tested.

LIMITED LIFETIME WARRANTY*. NO CORE CHARGE!

45610 65-67 New Caliper - O-Ring - Left Front **$207.99**
45611 65-67 New Caliper - O-Ring - Right Front **$207.99**
45612 65-67 New Caliper - O-Ring - Left Rear **$207.99**
45613 65-67 New Caliper - O-Ring - Right Rear **$207.99**
45614 65-67 New Caliper **SPECIAL 1** - see Kits - O-Ring **$876.99**
45615 65-67 New Caliper **SPECIAL 2** - see Kits - O-Ring **$958.99**

New Delco® Calipers with Lip Seals

Get completely new calipers that feature: New Stainless Steel Sleeves, New Pistons, Seals, Springs, Dust Covers, Stainless Steel Bleeder Screws and Plugs. And they're individually pressure tested.

LIMITED LIFETIME WARRANTY*. NO CORE CHARGE!

45600 65-67 New Caliper - Lip Seals - Left Front **$182.99**
45601 65-67 New Caliper - Lip Seals - Right Front **$182.99**
45602 65-67 New Caliper - Lip Seals - Left Rear **$182.99**
45603 65-67 New Caliper - Lip Seals - Right Rear **$182.99**
45604 65-67 New Caliper **SPECIAL 1** - see Kits - Lip Seals **$784.99**
45605 65-67 New Caliper **SPECIAL 2** - see Kits - Lip Seals **$846.99**

Caliper Changeover Kits

46308 65-67 Caliper Changeover Kit - Front O-Ring **$63.99**
46309 65-67 Caliper Changeover Kit - Rear O-Ring **$63.99**

COMPLETE CALIPER KITS — SPECIAL 1 & 2

Many of our new and rebuilt calipers on this page are available in complete sets that save you money and make it easier to replace, update or refurbish an entire brake system.

Caliper SPECIAL 1 includes:

- 4 Calipers
- 4 pc. Rubber Brake Hose Set
- 1 Pair of Rear Caliper Brake Lines
- 1 Quart of Brake Fluid
- 8 Disc Brake Pads
- 4 Caliper Pad Pins
- 1 Piston Retaining Tool

***Caliper SPECIAL 2** (also includes Park Brake)*

Includes everything in SPECIAL 1 plus:

- 1 Anti-Corrosive Stainless Steel Park Brake Kit
- 4 pc. Park Brake Shoe Set

New Non-Delco® Calipers with O-Rings

Completely new calipers that feature New O-Ring Style Pistons & Seals, Original Style Steel Sleeves, Springs, Dust Covers, Bleeder Screw, Plugs, and Pins. Each caliper is manufactured in an ISO certified facility and individually pressure tested to ensure quality. Castings do not include the Delco Moraine name. NO CORE CHARGE!

Includes a complete 2 YEAR WARRANTY on the entire caliper from date of purchase. Includes seals, sleeves, boots and O-rings.

2 YEAR WARRANTY*. NO CORE CHARGE!

52350 65-67 New Non-Delco Caliper - O-Ring - Left Front **$133.99**
52351 65-67 New Non-Delco Caliper - O-Ring - Right Front **$133.99**
52352 65-67 New Non-Delco Caliper - O-Ring - Left Rear **$133.99**
52353 65-67 New Non-Delco Caliper - O-Ring - Right Rear **$133.99**
52354 65-67 New Non-Delco Caliper **SPECIAL 1** - O-Ring **$596.99**
52355 65-67 New Non-Delco Caliper **SPECIAL 2** - O-Ring..... **$668.99**

New Delco Calipers with O-Rings

New Non-Delco Calipers with O-Rings

800-458-3475
CorvetteAmerica.com

WARNING: Cancer and Reproductive Harm — www.P65Warnings.ca.gov

#43030 1965-67
Classic Restoration Caliper

#43000 1965-67
Modern Restoration Caliper

#52350Z 1965-67
Zinc Plated Caliper

#52353Z 1965-67
Zinc Plated Caliper

Classic Restoration Calipers

Rebuilt Delco Moraine Castings w/ Traditional Lip Seals.

For those who want 100% original, our Restoration Calipers feature: New Stainless Steel Sleeves; New Pistons, Lip Seals, Springs, Dust Covers, Stainless Steel Bleeder Screws and Plugs; Long Lasting Epoxy Paint; and they're Individually Pressure Tested.
Covered by a LIMITED LIFETIME WARRANTY*. Core Charges Apply+.

43030 65-67 Classic Resto. Caliper - Left Front **$105.99**
43031 65-67 Classic Resto. Caliper - Right Front..... **$105.99**
43032 65-67 Classic Resto. Caliper - Left Rear **$105.99**
43033 65-67 Classic Resto. Caliper - Right Rear..... **$105.99**
43034 65-67 Classic Resto. Caliper **SPECIAL 1** - see Kits..... **$438.99**
43035 65-67 Classic Resto. Caliper **SPECIAL 2** - see Kits..... **$509.99**

Modern Restoration Calipers

Rebuilt Delco® Moraine Castings with O-Ring Technology

Get improved performance that looks just like original when installed. Special O-Rings are used in place of the original lip seals to eliminate leaking and resist piston cavitation during hard driving conditions. Our Modern Restoration Calipers feature: New Stainless Steel Sleeves, New O-Ring Pistons, Seals, Springs, Dust Covers, Stainless Steel Bleeder Screws and Plugs, Long Lasting Epoxy Paint; and they're Individually Pressure Tested.
Covered by a LIMITED LIFETIME WARRANTY*. Core Charges Apply+.

43000 65-67 Modern Resto. Caliper - O-Ring - Left Front..... **$121.99**
43001 65-67 Modern Resto. Caliper - O-Ring - Right Front..... **$121.99**
43002 65-67 Modern Resto. Caliper - O-Ring - Left Rear **$121.99**
43003 65-67 Modern Resto. Caliper - O-Ring - Right Rear **$121.99**
43004 65-67 Modern Resto. Caliper **SPECIAL 1** - O-Ring..... **$529.99**
43005 65-67 Modern Resto. Caliper **SPECIAL 2** - O-Ring..... **$611.99**

CORVETTE AMERICA OFFERS MORE CHOICES IN 1965-67 BRAKE CALIPERS & CALIPER KITS!

***LIMITED LIFETIME WARRANTY** — Caliper Sleeves are warranted to the original purchaser for as long as they own the vehicle, so long as the brake system is properly maintained (correctly replacing brake fluid upon initial installation and each subsequent brake fluid change, which should be done once every two years). New rubber hoses should be installed during the initial installation of the calipers and be replaced every 5 years, as internal hose deterioration can contaminate the brake fluide. All other parts & workmanship of these calipers are warrantied for 90 days from the date of purchase under normal use.

+Core Charge — $50 per caliper. Returned calipers must be **Original Delco Moraine Castings** without broken ears or altered bleeders. If calipers have been previously sleeved, the core refund will be reduced to $25 provided it meets the above criteria.

Zinc Plated Calipers - New Casting with O-Ring

Does not include "Delco" in Casting. No Core Charge Required.

52350Z 65-67 Zinc Plated Caliper w/ O-Ring - Left Front.... **$133.99**
52351Z 65-67 Zinc Plated Caliper w/ O-Ring - Right Front.. **$133.99**
52352Z 65-67 Zinc Plated Caliper w/ O-Ring - Left Rear..... **$133.99**
52353Z 65-67 Zinc Plated Caliper w/ O-Ring - Right Rear... **$133.99**
52354Z 65-67 Zinc Plated Caliper - **SPECIAL 1** **$596.99**
52355Z 65-67 Zinc Plated Caliper - **SPECIAL 2** **$668.99**

*#52355Z 1965-67 Zinc Plated Caliper **SPECIAL 2***

#52352Z — Zinc Plated Caliper with O-Rings

#46305

#X2614

Caliper Components

36323	65-67 Caliper Bleeder Plug - Rear	$5.99
52280	65-67 Caliper Bleeder Screw	$1.99
52281	65-67 Caliper Bleeder Screw Set - 6 pc	$9.99
29875	65-67 Caliper Mounting Bolts & Lock Washer Set - 8 pc	$11.99
X2611	65-66 Caliper Mount Bracket - LH Front - 66 Early	$38.99
X2612	65-66 Caliper Mount Bracket - RH Front - 66 Early	$38.99
X2613	66-67 Caliper Mount Bracket - LH Front - 66 Late	$38.99
X2614	66-67 Caliper Mount Bracket - RH Front - 66 Late	$38.99
36324	65-67 Caliper Pistons - Front - 4 pc set	$41.99
36326	65-67 Caliper Pistons - Rear - 4 pc set	$41.99
1637	65-67 Caliper Piston Retaining Tool	$5.99
36325	65-67 Caliper Piston Return Spring - Front	$4.99
36327	65-67 Caliper Piston Return Spring - Rear	$3.99
29873	65-67 Caliper Seal Kit - Front - Lip Seal	$21.99
29874	65-67 Caliper Seal Kit - Rear - Lip Seal	$20.99
46305	65-67 Caliper Seal Kit - Front - O-ring	$33.99
46304	65-67 Caliper Seal Kit - Rear - O-ring	$33.99

#29870

#50869

Brake Pads, Shoes & More

36997	63-64 Brake Bleeder Screw - Front - Original Style	$1.99
36998	63-64 Brake Bleeder Screw - Rear - Original Style	$4.99
32967	63-64 Brake Self Adjuster - LH	$5.99
32968	63-64 Brake Self Adjuster - RH	$5.99
27299	63-64 Brake Shoes - Front - 1 Axle Set	$74.99
29870	63-64 Brake Shoes - Front - Car Set	$39.99
27295	63-64 Brake Shoes - Rear - Car Set	$51.99
29871	63-64 Brake Shoe Hardware Kit - Front - Axle Set	$11.99
29872	63-64 Brake Shoe Hardware Kit - Rear - Axle Set	$11.99
34893	63-64 Brake Shoe Pivot - Front	$34.99
34894	63-64 Brake Shoe Pivot - Rear	$28.99
35333	63-64 Brake Shoe Retainer	$13.99
41990	65-67 Disc Brake Pads - 4 pc set	$25.99
50869	65-67 Disc Brake Pads - Professional Grade - 4 pc set	$48.99
1408	65-67 Disc Brake Pad Retaining Pin	$2.99
44661	65-67 Disc Brake Pad Anti-Squeak Kit - 8 pc set	$17.99

Discounts & Coupons Emailed!

Enter your email address on CorvetteAmerica.com

#29868

#27638

Wheel Cylinders

29868	63-64 Wheel Cylinder - Front LH	$28.99
29869	63-64 Wheel Cylinder - Front RH	$28.99
27298	63-64 Wheel Cylinder - Rear - 1" - Exc. HD - LH	$19.99
27638	63-64 Wheel Cylinder - Rear - 1" - Exc. HD - RH	$19.99
34884	63-64 Wheel Cylinder Kit w/ Pistons - Front	$17.99
34885	63-64 Wheel Cylinder Kit - No Pistons - Rear	$5.99
46868	63-65 Wheel Cylinder Pins - 8 Required	$4.99
42095	63-64 Wheel Cylinder Pistons - Front - pr	$13.99
34886	63-64 Wheel Cylinder Pistons - Rear - pr	$10.99
34892	63-64 Wheel Cylinder Screws - Rear - 4 pc set	$3.99
50945	63-65 Wheel Cylinder Seal Kit - Front w/o Piston	$6.99

Brake Fluid

1636	63-67 Bleeder System - Caliper/Master/Wheel Cylinder	$9.99
48171	63-67 Brake Fluid - DOT 3 Super Heavy Duty - Quart	$6.99
48172	63-67 Brake Fluid - DOT 4 - Quart	$10.99
4117	Brake Fluid - Silicone - Quart	$18.99

Note: If converting from DOT 3 or DOT 4 to Silicone (DOT 5), or from Silicone to DOT 3 or DOT 4, you must purge your system first because the fluid will gel.

#29808

#29784

Park Brake Handles

29808	63 Park Brake Handle	$55.99
29784	64-66 Park Brake Handle	$44.99

Parking Brake Components

22370	65-67 Backing Shield - Silver - LH	$25.99
22371	65-67 Backing Shield - Silver - RH	$25.99
49584	65-67 Backing Shield - Silver w/ Delco Stamp - LH	$40.99
49585	65-67 Backing Shield - Silver w/ Delco Stamp - RH	$40.99
37580	65-67 Park Brake Anchor Block	$11.99
0261	63 Park Brake Cable - Front	$50.99
1377	64-66 Park Brake Cable - Front - Stainless Steel	$45.99
X2481	67 Park Brake Cable - Front	$20.99
36329	67 Park Brake Cable - Front - Stainless Steel	$33.99
0839	63 Park Brake Cable - Rear - LH	$45.99
0840	63 Park Brake Cable - Rear - RH	$56.99
0928	64-65 Park Brake Cable - Rear LH - Drum Brake	$45.99
0929	64-65 Park Brake Cable - Rear RH - Drum Brake	$45.99
55719	65-67 Park Brake Cable - Rear	$30.99
36330	65-67 Park Brake Cable - Rear - Stainless Steel	$45.99
K1414	67 Park Brake Cable to Equalizer Nuts - pr	$1.99
42099	64-66 Park Brake Cable Bolt - Front	$1.99

800-458-3475
CorvetteAmerica.com

WARNING: Cancer and Reproductive Harm — www.P65Warnings.ca.gov

#49584

#1377

#1701 - 4 pc set

#1766 - 4 pc set

37579	65-67	Park Brake Cable Boot	$9.99
42100	65-67	Park Brake Cable Boots - Rear - pr	$24.99
34871	64-67	Park Brake Cable Brackets on Frame - Rear - Weld-On - pr	$28.99
34873	65-67	Park Brake Cable Brackets on Trailing Arm - Front - Weld-On - pr	$13.99
34870	65-67	Park Brake Cable Brkts on Trail. Arm - Rear - pr	$20.99
34862	63	Park Brake Cable Clamp	$1.99
34863	63	Park Brake Cable Clamp Nut	$0.99
29788	63	Park Brake Cable Clamp w/ Reinforcement	$21.99
29787	63	Park Brake Cable Clamp w/ Screw Set - 8 pc	$29.99
29789	63	Park Brake Cable Clevis w/ Pin	$8.99
34867	64-66	Park Brake Cable Clamp - Front	$0.99
34872	64-66	Park Brake Cable Clamp - Weld to Frame	$8.99
34868	64-66	Park Brake Cable Clamp Bolt, Nut & Lockwasher on Frame Rail	$0.99
34866	64-66	Park Brake Cable Clamp T-Bolt, Rivets & Nut	$6.99
29862	63-65	Park Brake Cable Connector	$8.99
29796	63	Park Brake Cable Equalizer	$21.99
29857	64-67	Park Brake Cable Equalizer	$4.99
29790	63	Park Brake Cable Firewall Seal	$4.99
34864	63	Park Brake Cable Grommets - pr	$1.99
42098	65-66	Park Brake Cable Grommet - at Firewall - after 4 / 65	$1.99
29850	67	Park Brake Cable Grommet - Front	$6.99
29794	63	Park Brake Cable J-Bolt Rod	$15.99
29865	63-67	Park Brake Cable Nylon Guides - pr	$3.99
29867	63-67	Park Brake Cable Nylon Guides - each	$4.99
40838	67	Park Brake Cable Pulley	$11.99
K1482	67	Park Brake Cable Pulley Bolt Set	$2.99
29798	64-66	Park Brake Cable Pulley & Bearing	$26.99
29799	64-66	Park Brake Cable Pulley Bolt w/ Nut & Washer	$1.99
K1311	67	Park Brake Cable Pulley Bolt w/ Nut & Washer	$1.99
29797	64-66	Park Brake Cable Pulley Bracket	$23.99
29854	67	Park Brake Cable Pulley Brkt - Weld to Frame	$28.99
34865	64-66	Park Brake Cable Pulley Bracket Nuts & Washers	$0.99
K1399	64-66	Park Brake Cable Pulley Bracket Washers - pr	$1.99
29852	67	Park Brake Cable Pulley Spacer	$3.99
29864	63-67	Park Brake Cable Retainer Clip - "Mickey Mouse clip"	$1.99
34860	63	Park Brake Cable Retaining Clip on Rod	$3.99
34876	67	Park Brake Cable Retaining Pin - Front	$1.99
29795	63	Park Brake Cable Return Spring	$5.99
29856	64-67	Park Brake Cable Return Spring	$7.99
49429	67	Park Brake Console Retainer Bracket	$49.99
37270	67	Park Brake Console Chrome Trim Ring	$81.99
2009	67	Park Brake Console Seal	$4.99
42572	67	Park Brake Console Bracket	$43.99
49419	67	Park Brake Console Support Bracket	$83.99
42580	67	Park Brake Console Reinforcement	$132.99
29809	63	Park Brake Handle Inner Shaft	$56.99
42101	63-66	Park Brake Handle Attaching Pin	$1.99
K1383	63-66	Park Brake Handle Bracket Screws - pr	$1.99
K1524	67	Park Brake Handle Mount Bolts - 4 pc	$3.99
34874	64-66	Park Brake Handle Notched Shaft	$60.99
42096	63	Park Brake Handle Spring & Pawl Set	$15.99
34991	63-66	Park Brake Handle Spring & Pawl Set	$17.99
34859	64-66	Park Brake Handle Spring & Pawl Set	$12.99
34861	63	Park Brake Handle Stop Pin	$5.99
34834	64-66	Park Brake Handle Stop Pin	$5.99
40836	67	Park Brake Handle Stop Pin	$3.99
X4229	65-67	Park Brake Kit - Anti-Corrosive Stainless Steel	$40.99
1671	65-67	Park Brake Kit Installation Tool	$40.99
29791	63	Park Brake Lever	$21.99
29792	63	Park Brake Lever Bracket - Weld to Frame	$16.99
29861	64-66	Park Brake Lever Bracket - Weld to Frame	$16.99
29793	63	Park Brake Lever Bolt, Washer, Nut Kit	$0.99
34869	64-66	Park Brake Lever Clevis and Pin	$8.99
29858	64-66	Park Brake Lever on Frame	$19.99
29859	64-66	Park Brake Lever Pivot Bolt with Nut	$0.99
29860	63-66	Park Brake Lever Pivot Bushing	$4.99
1053	64-66	Park Brake Light Switch	$4.99
29855	64-66	Park Brake J-Bolt Rod	$53.99
52064	65-67	Park Brake Shoes - Delco - 4 pc	$116.99
1766	65-67	Park Brake Shoes - Reproduction- 4 pc	$40.99
1701	65-67	Park Brake Shoes - Stainless Steel - 4 pc	$61.99
33491	65-67	Park Brake Shoe Anchor Bolt	$8.99
34561	65-67	Park Brake Shoe Anchor Pin	$1.99
33492	65-67	Park Brake Shoe Retainer	$2.99
34888	63-64	Park Brake Shoe Levers & Pins - pr	$73.99
36332	65-67	Park Brake Shoe Spring - Lower - Stainless Steel	$3.99
36331	65-67	Park Brake Shoe Spring - Upper - Stainless Steel	$3.99
34887	63-64	Park Brake Shoe Spreader Bars - pr	$34.99
32657	63-64	Park Brake Shoe Spreader Bar Springs - pr	$3.99
42102	67	Park Brake Warning Switch	$20.99

#X4229 1965-67 Stainless Steel Park Brake Kit

#37270

WIN CORVETTE PRIZES!
Follow us for your chance to win.

#36369 1965-66 Stainless Steel Park Brake Rebuild Kit

#36333 1967 Stainless Steel Park Brake Rebuild Kit

1963 PARKING BRAKE

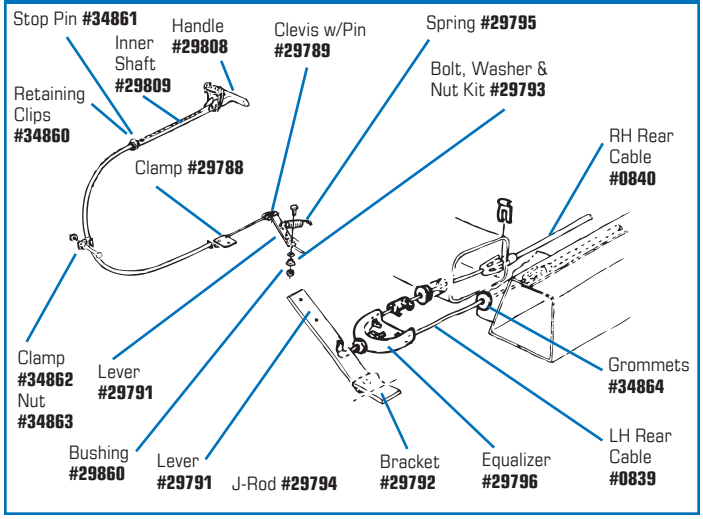

1964-66 PARKING BRAKE

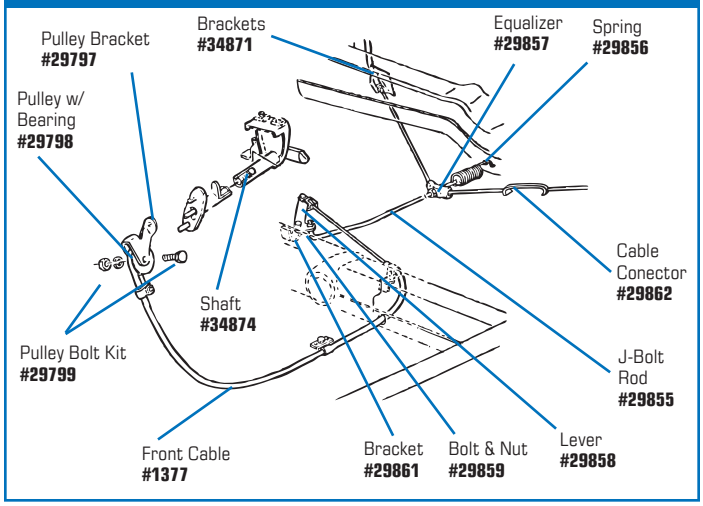

1965-67 PARKING BRAKE - BACKING PLATE

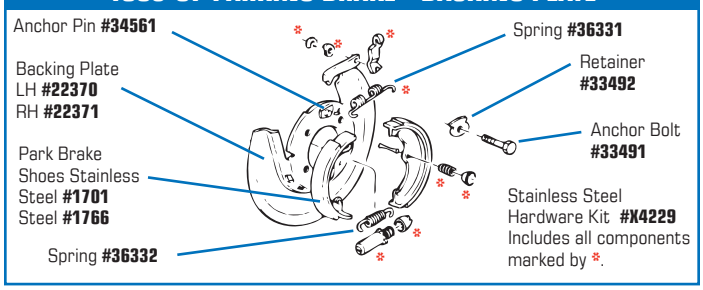

1967 PARKING BRAKE

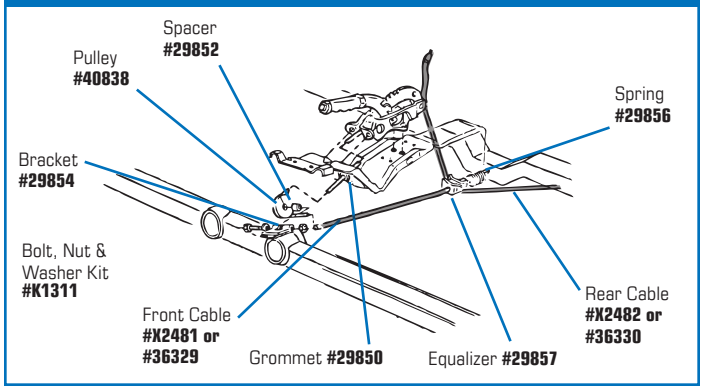

PARK BRAKE KITS

52397	63	Park Brake Cable Kit - Front & Rear	$132.99
36369	65-66	Park Brake Rebuild Kit - SS - Includes: Cables, Equalizer, Spring, Shoes & Hardware	$244.99
36330	65-67	Park Brake Cable Kit - Rear - Stainless Steel	$45.99
44955	65-67	Park Brake Cable Kit - Includes: Cable, Retaining Clips & Guides	$40.99
44954	67	Park Brake Cable Kit - Front - Includes: Cable, Pulley Spacer & Pulley Bolt Set	$26.99
44956	67	Park Brake Cable Kit - Front & Rear - Includes: Cables, Equalizer & Nuts, Pulley Spacer & Bolt Set, Return Spring, Retainer Clips & Guides	$60.99
51024	67	Park Brake Cable Kit - Front Stainless Steel - Includes: S.S. Front Cable, Return Spring, Pulley, Spacer, Bolt, Nut & Washer	$61.99
51023	67	Park Brake Cable Pulley Kit - Includes: Pulley, Spacer, Bolt, Nut & Washer	$14.99
44957	67	Park Brake Master Kit - Includes: Cables, Equalizer & Nuts, Pulley Spacer & Bolt Set, Return Spring Retainer Clips, Guides, SS Park Brake Kit, Park Brake Shoes & Installation Tool	$152.99
36333	67	Park Brake Rebuild Kit - Stainless Steel - Includes: Cables, Equalizer, Return Spring, Shoes, Hardware, Pulley & Tool	$210.99
1671	65-67	Park Brake Kit Installation Tool	$11.99

800-458-3475
CorvetteAmerica.com

WARNING: Cancer and Reproductive Harm — www.P65Warnings.ca.gov

1963-1964 Fast Brake Special

Substantial savings over individual component prices!

One complete kit contains front and rear brake shoes, front and rear wheel cylinders, all brake shoe hardware and flex hoses.

24999 63-64 Fast Brake Special **$203.99**

Hawk HP Brake Pads

43293 65-67 Plus Pads - High Friction, Front or Rear..... **$100.99**
43287 65-67 Street Pads - Low Dust, Front or Rear **$84.99**

#40833 - Drum

#40834 - Disc

Speed Bleeders

Speed Bleeders make bleeding your brakes a one-person job. These zinc-coated, stainless steel Bleeders replace your originals and use a check ball and patented thread sealing system to prevent air from being pulled back into your brake lines. Includes dust caps.

40833 63-65 for Drum Brakes - pr **$16.99**
40834 65-67 for Disc Brakes - pr **$16.99**

#42045

1963-1964 Disc Brake Conversion Kits

Upgrade to disc brakes without modifying the firewall or hood. Our Conversion Kits make it simple due to an adapter that mounts a manual, dual master cylinder. The Power Brake Kit uses a new booster with a reproduction bracket and Corvette master cylinder. It moves the wheels out 1 1/4" on each side.

Kit includes: caliper brackets, new GM calipers w/ pads, bearings, seals, dust covers, rotors, brake hoses, new dual master cylinder, pushrod, proportioning valve, booster (Power Kit only) and hardware.

42045 63 Disc Brake Conversion Kit - Front Power **$1060.99**
42046 63-64 Disc Brake Conversion Kit - Front Manual **$978.99**
42047 64 Disc Brake Conversion Kit - Front Power **$1060.99**

Manual
#42046

Power Brake
#42047

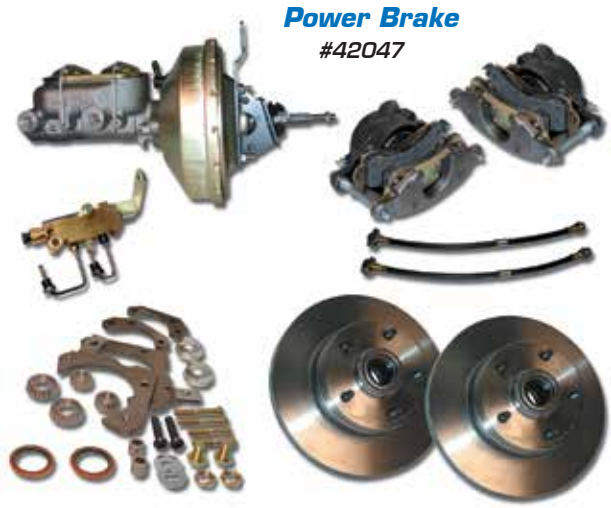

#29866 1963-65 Front Brake Drum

#2017 1965-67 Front Brake Rotor - Reproduction

#52063 1965-67 Rear Brake Rotor - Delco

#2014 1965-67 Rear Brake Rotor - Reproduction

#49936 1965-67 Front Brake Rotors & Pads Kit

#49938 1965-67 Rotors & Pads Brake Kit

DRUMS & ROTORS

29866	63-65 Brake Drum - Front	$63.99
27293	63-65 Brake Drum - Rear	$63.99
27294	63-64 Brake Drum Spring - Coil Type	$15.99
52062	65-67 Brake Rotor - Front - Delco Durastop	$71.99
2017	65-67 Brake Rotor - Front - Reproduction	$61.99
52063	65-67 Brake Rotor - Rear - Delco Durastop	$88.99
2014	65-67 Brake Rotor - Rear - Reproduction	$61.99
35271	65-67 Rivets - Front Rotor to Hub - 10 pc	$8.99
35287	65-67 Rivets - Rear Rotor to Spindle - 10 pc	$8.99
42044	63-64 Z06 Brake Fans - 4 pc	$305.99
K1437	63-64 Z06 Brake Cooling Hole Cover Screw Set	$24.99

DRILLED & SLOTTED BRAKE ROTORS

These Drilled & Slotted Brake Rotors are direct replacements with a freshly ground braking surface and rivet holes like the originals. Rotors are drilled & slotted for increased cooling.

MADE BY Corvette America

52419	65-67 Drilled & Slotted Brake Rotor Kit - 4 pc	$256.99
52415	65-67 Front Drilled & Slotted Brake Rotor - LH	$81.99
52416	65-67 Front Drilled & Slotted Brake Rotor - RH	$81.99
52417	65-67 Rear Drilled & Slotted Brake Rotor - LH	$81.99
52418	65-67 Rear Drilled & Slotted Brake Rotor - RH	$81.99

ROTOR & PAD KITS

49936	65-67 Brake Kit - Front - Reproduction Rotors & Pads*	$142.99
49937	65-67 Brake Kit - Rear - Reproduction Rotors & Pads*	$142.99
49938	65-67 Brake Kit - Car Set - Repro. Rotors & Pads*	$234.99
52296	65-67 Brake Rotors & Pads Kit - Front**	$112.99
52297	65-67 Brake Rotors & Pads Kit - Rear**	$112.99

* Includes: Rotors, Pads, Anti-Squeak Kit & Pad Pins.
** Includes: Rotors & Pads

Corvette America's INTERIOR Package THE ORIGINAL

Call Today & SAVE on an Interior Package!

Get discounts on Interiors & Parts when you order an Interior Package!

800-458-3475
CorvetteAmerica.com

WARNING: Cancer and Reproductive Harm — www.P65Warnings.ca.gov

#22377

Wilwood Classic Series Front Brake Kit

For use with Stock Spindles & Wheels.
The Classic Series Front Brake Kit delivers the braking performance of Wilwood's Forged Dynalite Calipers while maintaining the most wheel clearance of any 4-piston caliper in its class. The forged aluminum calipers are paired with 11" diameter OEM style 1-piece cast iron rotors - a perfect combination for your stock wheels. Kit includes: calipers, pads, rotors, brackets, hardware & instructions. Requires NO modifications.

22377 63-67 Front Brake Kit - Wilwood Stock Wheel..... **$829.99**

#22376

Wilwood Dynapro 6 Big Front Brake Kit

Give your classic Corvette big-brake performance courtesy of Wilwood's DynaPro 6 forged billet 6-piston calipers and 12" SRP drilled & slotted rotors.
Kit includes: calipers, pads, rotors, hubs, hardware & instructions.
More brake kits are available for use with larger diameter wheels.

22376 63-67 Front Brake Kit - Restored Upgrade..... **$1269.99**

#22378

#22379

Classic Series Replacement Caliper Kits

For Use with Stock Wheels — Willwood's 4-piston calipers mount to the stock brackets on stock rotors to provide a low-maintenance performance upgrade for 1965-1982 Corvettes. These direct OE replacements feature billet aluminum bodies, stainless steel pistons and high-temperature seals. They're lighter than stock, provide consistent braking performance, and put an end to rust and bore pitting that plague the original calipers.

Calipers use original-style D8 brake pads and fit snugly inside most '67 or newer wheels. Some wheels, including the '65-'67 OE "JK" code steel wheels require a 3/16" wheel spacer for clearance.
The kit includes DOT Stainless Steel Brake Lines, Calipers and BP-10 Compound Pads.

22378 65-67 Front Caliper Kit - 4 Piston - Stock Wheel **$729.99**
22379 65-67 Rear Caliper Kit - 4 Piston - Stock Wheel **$729.99**

#2594 1963-67 Front & Rear Bumper Set - USA

#2601 1963-67 Front Bumper - RH - USA

FRONT & REAR BUMPERS

2594	63-67 Bumper Set - Front & Rear - USA	$2175.99
2595	63-67 Bumper Set - Front & Rear - Import	$1682.99
2600	63-67 Bumper - Front - LH - USA	$648.99
2601	63-67 Bumper - Front - RH - USA	$648.99
2598	63-67 Bumper - Front - LH - Import	$489.99
2599	63-67 Bumper - Front - RH - Import	$489.99
2602	63-67 Bumper - Rear LH - USA	$648.99
2603	63-67 Bumper - Rear RH - USA	$648.99
2596	63-67 Bumper - Rear - LH - Import	$489.99
2597	63-67 Bumper - Rear - RH - Import	$489.99

#25336
1963-67
Front Bumper
Package

FRONT BUMPER PACKAGE

25336	63-67 Front Bumper Package - Includes: Bumpers, Crossbar, License Support & 2 License Support Bumpers	$1192.99

#1540 License Crossbar - Front

#1015
1966-67
Front License Bracket

#K1238 1963-67
Front Bumper Mounting Kit

FRONT BUMPER

42111	63	Front Bumper Bracket - LH Center	$60.99
1017	64	Front Bumper Bracket - LH Center	$55.99
1019	65-67	Front Bumper Bracket - LH Center	$55.99
1021	63-67	Front Bumper Bracket - LH Inner	$86.99
42113	63	Front Bumper Bracket - LH Outer	$39.99
1023	64-67	Front Bumper Bracket - LH Outer	$28.99
42112	63	Front Bumper Bracket - RH Center	$60.99
1018	64	Front Bumper Bracket - RH Center	$55.99
1020	65-67	Front Bumper Bracket - RH Center	$55.99
1022	63-67	Front Bumper Bracket - RH Inner	$91.99
42114	63	Front Bumper Bracket - RH Outer	$39.99
1024	64-67	Front Bumper Bracket - RH Outer	$28.99
42537	63	Bumper Brkt Kit - 6 Brackets & Mounting Kit	$407.99
25334	64	Bumper Brkt Kit - 6 Brackets & Mounting Kit	$376.99
25335	65-67	Bumper Brkt Kit - 6 Brackets & Mounting Kit	$376.99
K1238	63-67	Bumper Mounting Kit - Front - Bolts, Nuts & Washers	$28.99
42121	63-67	Front Bumper Bolt Spacers - 4 pc set	$10.99
42107	63-65	License Bracket - Front - Correct	$21.99
1015	66-67	License Bracket - Front	$19.99
42108	66-67	License Bracket - Front - 427 Auto w/ AC	$61.99
42109	66-67	License Bracket Bolt Set - 427 Auto w/ AC	$4.99
K1038	63-67	License Bracket Bumpers - pr	$3.99
K1336	63-67	License Bracket to Bar Bolt Kit	$1.99
1540	63-67	License Crossbar - Front	$49.99
42110	63-65	License Plate to Bracket Screw/Nut/Bumper Set	$3.99
34639	66-67	License Plate to Bracket Screw/Nut/Bumper Set	$4.99

1963-67 FRONT BUMPER HARDWARE

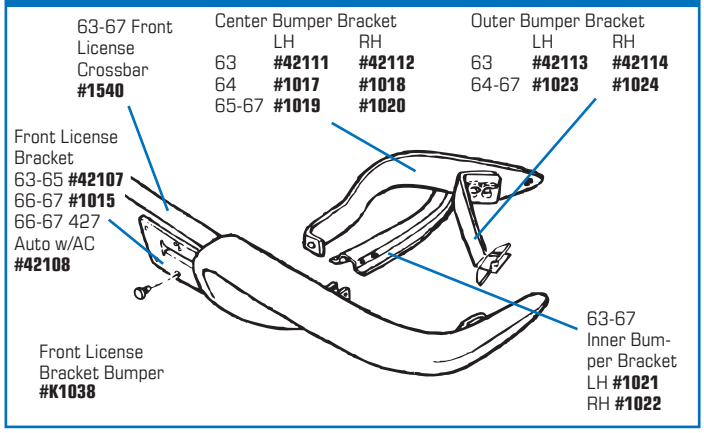

800-458-3475
CorvetteAmerica.com
WARNING: Cancer and Reproductive Harm — www.P65Warnings.ca.gov

#X2015
Rear License Bezel

#29877
Stainless Steel License Plate Frame

Rear Bumper

K1244	63-67	License Bezel Plastic Nuts - 4 pc	$2.99
K1188	63-67	License Bezel Screws - 4 pc	$2.99
29877	63-67	License Plate Frame - Stainless Steel	$22.99
42119	63	Rear Bumper Bracket - LH Center	$42.99
29882	64-67	Rear Bumper Bracket - LH Center	$31.99
42117	63	Rear Bumper Bracket - LH Inner	$42.99
29880	64-67	Rear Bumper Bracket - LH Inner	$31.99
42115	63	Rear Bumper Bracket - LH Outer	$42.99
29878	64-67	Rear Bumper Bracket - LH Outer	$31.99
42120	63	Rear Bumper Bracket - RH Center	$42.99
29883	64-67	Rear Bumper Bracket - RH Center	$31.99
42118	63	Rear Bumper Bracket - RH Inner	$42.99
29881	64-67	Rear Bumper Bracket - RH Inner	$31.99
42116	63	Rear Bumper Bracket - RH Outer	$42.99
29879	64-67	Rear Bumper Bracket - RH Outer	$31.99
42538	63	Rear Bumper Bracket Kit - 6 Brackets, 2 Support Rods & Mounting Kit	$258.99
42539	64-67	Rear Bumper Bracket Kit - 6 Brackets, 2 Support Rods & Mounting Kit	$223.99
41116	63-67	Rear Bumper Lower Support Rods	$17.99
K1237	63-67	Bumper Mounting Kit - Bolts, Nuts & Washers	$29.99
29885	63-67	Rear Bumper Mount Shim	$4.99
X2015	63-67	Rear License Bezel	$87.99
34698	63-65	Rear License Plate Screw, Nut & Bumper Set	$2.99
K1187	66-67	Rear License Plate Screw, Nut & Bumper Set	$3.99

1963-67 REAR BUMPER HARDWARE

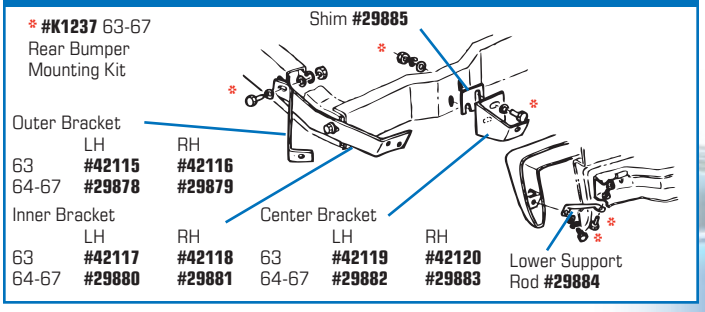

1963-67 REAR LICENSE PLATE MOLDINGS

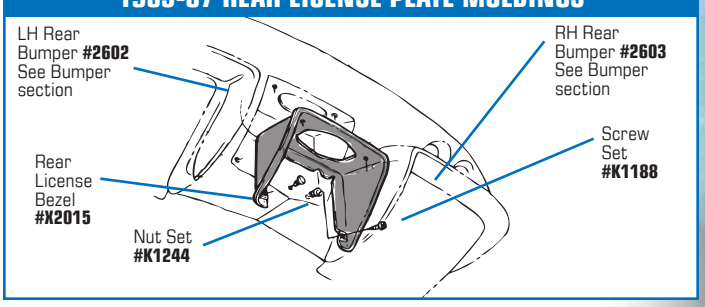

Front License Plates

42527	63-67	Black w/ Mirrored Crossflags	$30.99
43774	63-67	Mirrored w/ Black Crossflags	$30.99

#471065 *#471067*

1965-1967 "Show-Your-Year" License Frames

In chrome for 1965-67. Steel construction. Simply attach your 2-digit year after part number 4710_ _.

4710_	Show-Your-Year Frame	$17.99

Other Frames Available:

40255	"I'd Rather Be Driving My Corvette" Frame	$17.99
26883	Stingray License Frame	$17.99

#4068 *#4075*

Corvette License Plates

The classic Corvette script is displayed in raised lettering on ABS plastic and trimmed in chrome.

4068	63-67	Chrome Letters	$14.99
4075	63-67	Chrome Letters & Border	$14.99

WIN CORVETTE PRIZES!

Follow us for your chance to win.

WARNING: Cancer and Reproductive Harm — www.P65Warnings.ca.gov

Serving the Corvette Community Since 1977.

Console

#1780 1965-67 Automatic Shift Console Repair Kit

#1779 1964-67 4 speed Shift Console Repair Kit

#42128 1963 Center Console Side Extensions

Console Repair Kits

29902	64	Console Repair Kit - Auto	$39.99
1780	65-67	Console Repair Kit - Auto	$30.99
29900	64-67	Console Repair Kit - 3 spd	$64.99
1779	64-67	Console Repair Kit - 4 spd	$30.99

Center Consoles w/o Power Windows

42126	63	Center Console - Main - w/o PW	$1019.99
42128	63	Center Console - Side Extensions - pr	$767.99
46785	64	Center Console - Dark Blue w/o PW	$662.99
46781	64-66	Center Console - Black w/o PW	$662.99
46783	64-66	Center Console - Silver w/o PW	$662.99
43807	64-67	Center Console - Main - Unfinished - 4 spd w/o PW	$570.99
46782	64	Center Console - Red w/o PW	$662.99
46786	64	Center Console - Saddle w/o PW	$662.99
46788	65	Center Console - Maroon w/o PW	$662.99
46789	65-66	Center Console - Bright Blue w/o PW	$662.99
46787	65-66	Center Console - Green w/o PW	$662.99
46779	65-66	Center Console - Red w/o PW	$662.99
46794	65-66	Center Console - Saddle w/o PW	$662.99
46790	66	Center Console - Dark Blue w/o PW	$662.99
46992	67	Center Console - Black w/o PW	$713.99
46985	67	Center Console - Bright Blue w/o PW	$662.99
46986	67	Center Console - Green w/o PW	$662.99
46993	67	Center Console - Main w/o PW	$570.99
46991	67	Center Console - Red w/o PW	$662.99
46796	67	Center Console - Saddle w/o PW	$662.99
46791	67	Center Console - Teal w/o PW	$662.99

Center Consoles w/ Power Windows

42128	63	Center Console - Side Extensions - pr	$767.99
46774	64	Center Console - Dark Blue w/ PW	$662.99
46771	64	Center Console - Red w/ PW	$662.99
46775	64	Center Console - Saddle w/ PW	$662.99
46772	64-66	Center Console - Silver w/ PW	$662.99
46770	64-67	Center Console - Black w/ PW	$662.99
46777	65	Center Console - Maroon w/ PW	$662.99
46793	65-66	Center Console - Saddle w/ PW	$662.99
46778	65-67	Center Console - Bright Blue w/ PW	$662.99
46776	65-67	Center Console - Green w/ PW	$662.99
46773	65-67	Center Console - Red w/ PW	$662.99
46784	66	Center Console - Dark Blue w/ PW	$662.99
46795	67	Center Console - Saddle w/ PW	$662.99
46780	67	Center Console - Teal w/ PW	$662.99
46987	67	Center Console - Black w/ PW	$662.99
46990	67	Center Console - Bright Blue w/ PW	$662.99
46989	67	Center Console - Green w/ PW	$662.99
46988	67	Center Console - Red w/ PW	$662.99

#43807 1964-67 Center Consoles - Unfinished

#46780 1967 Teal Center Console w/ Power Windows

#46773 1965-67 Red Center Console w/ Power Windows

#42126 1963 Center Console Side Extensions

800-458-3475
CorvetteAmerica.com

WARNING: Cancer and Reproductive Harm — www.P65Warnings.ca.gov

#1566 1965-67
Shift Console Insert - Auto

#1031 1963-67 Ashtray

#28459
1965-67
Lower - Auto

#29895
1963
3 speed
or Auto

#2331 Shift Boot Retainer

#X2179 1964-67 3 or 4 speed

#29891 1963
Shift Indicator - Auto

#42137 1967 Replacement
Power Window Relay

Shift Boots

28459	65-67	Shift Boot - Lower Automatic	$91.99
29895	63	Shift Boot - 3 Speed or Auto	$51.99
1295	63	Shift Boot - 4 Speed	$40.99
X2179	64-67	Shift Boot - 3 or 4 Speed	$25.99
29897	63	Shift Boot Nut Plate w/ Rivet Kit	$31.99
29904	64-67	Shift Boot Nut Plate w/ Rivet Kit	$31.99
29896	63	Shift Boot Retainer	$30.99
2331	64-67	Shift Boot Retainer	$18.99
K1315	63-67	Shift Boot Retainer Screws - 12 pc set	$8.99
42129	64	Shifter Upper Seal - Auto	$74.99

Additional Console Components

37385	63	Ashtray w/ Correct Retainer Clip	$21.99
1031	63-67	Ashtray	$8.99
1564	64-67	Ashtray Door - Less Knob	$10.99
1565	64-67	Ashtray Door Knob	$9.99
29899	63-67	Ashtray Door Slides - pr	$16.99
46338	64-67	Ashtray Door Slide Bracket	$18.99
29893	63	Console Horseshoe Molding w/ Screws	$82.99
29894	63	Console Retainer Bracket w/ Rivet & Nut Plate	$16.99
29898	64-67	Console Retainer Bracket w/ Rivet & Nut Plate	$16.99
K1075	63	Console Screws - 18 pc set	$4.99
K1076	64-67	Console Screws - 8 pc set - 4 Short 4 Long	$3.99
37000	63-67	Console Support Bracket & Rivet Kit	$13.99
34669	63	Console U-Nuts - 17 pc set	$3.99
29905	64-67	Console U-Nut Set - 4 pc set	$1.99
29908	67	Fresh Air Vent Knob in Radio Side Panel	$20.99
42135	63-66	Power Window Circuit Breaker Clip	$18.99
K1419	67	Power Window Circuit Breaker Screws - pr	$1.99
42140	63-67	Power Window Grommets - Door & Dash Set	$5.99
42139	63-67	Power Window Harness S-Clip Set	$6.99
42137	67	Power Window Relay - Replacement	$31.99
K1408	67	Power Window Relay Screws - pr	$1.99
37330	63-67	Power Window Switch Cup	$40.99
42132	63	Power Window Switch Mount Kit	$6.99
K1401	64-67	Power Window Switch Mount Screws - pr	$1.99
42131	63-67	Power Window Switch Repair Pigtail & Plug	$29.99
K1087	63-67	Radio Side Panel Screws - 4 pc set	$3.99
29907	64-67	Radio Side Panel Support Clips - pr	$11.99
34652	63-67	Radio Side Panel U-Nuts - 4 pc set	$1.99
1566	65-67	Shift Console Insert - Auto	$10.99
1567	64-67	Shift Console Insert - Manual	$23.99
29891	63	Shift Indicator Plate - Auto	$20.99
29892	63	Shift Indicator Plate - 4 spd	$20.99
29903	64	Shift Indicator Plate - Auto	$11.99
29901	64-67	Shift Indicator Plate - 3 spd	$11.99
1568	64-67	Shift Indicator Plate - 4 spd	$8.99
29906	65-67	Shift Slide - Auto	$6.99

1963-67 CONSOLE

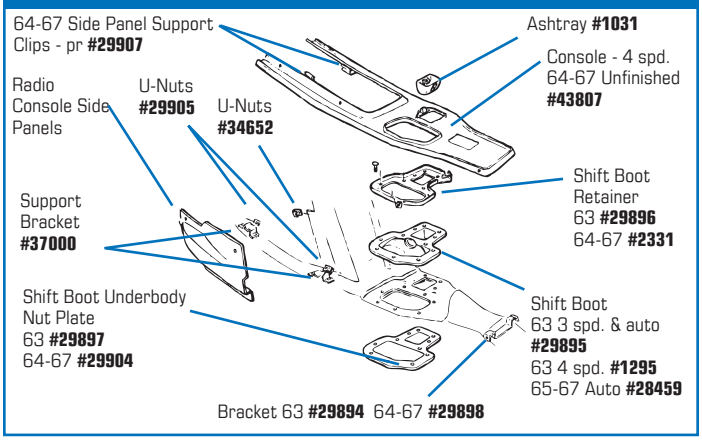

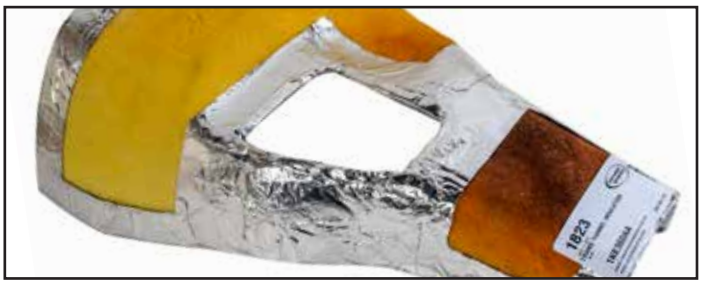

Transmission Tunnel Insulation

Installs on the underside of your floor pan. No resizing, reshaping or extra cutting required.

1823	63-67	Tunnel Insulation	$47.99
X2447	63-67	Tunnel Insulation Clip - 4 required	$1.99
X2551	63-67	Tunnel Insulation Clips - 4 pc	$7.99
36836	63-67	Tunnel Insulation Clip Rivets - 8 pc	$1.99

WARNING: Cancer and Reproductive Harm — www.P65Warnings.ca.gov

#X2064 1963-67 Small Block Radiator

#X2214 1966-67 Big Block Radiator

BRASS / COPPER RADIATORS

Corvette America's Brass / Copper Replacement Radiators are manufactured with a 4-Row Core design for greater cooling capacity. More efficient cooling system that doesn't empty your wallet.

X2064 63-67 Radiator - Small Block - 18.5" width **$432.99**
1715 65 Radiator - Big Block **$481.99**
X2214 66-67 Radiator - Big Block - 22.5" width **$421.99**

REPRODUCTION RADIATORS

These exact reproduction radiators are produced with long-life aluminum alloy and high performance serpentine fins. **Backed by a five-year manufacturer's warranty.** Specify build date or VIN when ordering reproduction radiators.

41889 63-64 Radiator - Repro. #3155316 - Painted & Dated **$1089.99**
32620 63-64 Radiator - Repro. - Not Painted or Dated..... **$1149.99**
41890 65-67 Radiator - Small Block - Reproduction - #3155316 - Painted & Dated **$1089.99**
32621 65-67 Radiator - Small Block - Not Painted or Dated.. **$1109.99**
41891 65 Radiator - Big Block - Repro. #3007436 ..... **$1249.99**
32622 66 Radiator - Big Block - Reproduction..... **$1199.99**
32624 67 Radiator - Reproduction - Big Block..... **$1199.99**
43480 63-67 Reproduction Radiator Painting Fee for #32620, and #32621 ..... **$60.99**

#52016 1963-67 Direct Fit HP Aluminum Radiator

#44274 1966-67 Direct Fit Aluminum Radiator BB - Manual

#52004 1966-67 Direct Fit Aluminum Radiator Black Ice - Auto

DIRECT FIT ALUMINUM RADIATORS

• **No Modifications** • **Fit to Stock Hoses** • **Greater Cooling Capacity**

Our Direct Fit Aluminum Radiators fit up to the factory hoses & original supports with no modifications. No cutting, bending or installing different hoses. Standard Direct Fit have 1" tubes. The HP have 1.25" tubes. **These cost much less than other Aluminum Radiators & they're backed by a three-year Manufacturer's Warranty.**

BLACK ICE — Have your radiator coated with Black Ice! This special epoxy will adhere to the aluminum & never peel or flake. It's only 3-5 mils thick & will not affect the radiators ability to dissipate heat. The semi-gloss finish resembles the older enamels used on copper/brass radiators & it will give your engine compartment an OEM look.

*** High Performance Radiators can also get the Black Ice option #43581.**

52016 63-67 Direct Fit High Performance Radiator*..... **$709.99**
52019 66-67 Direct Fit High Performance Rad. - BB Manual* . **$709.99**
52017 65 Direct Fit High Performance Radiator - BB*..... **$709.99**
52018 66-67 Direct Fit High Performance Radiator - Auto*.... **$759.99**
43581 63-67 Direct Fit Radiator - Black Ice Coating Option..... **$60.99**
44273 63-67 Direct Fit Radiator - Small Block **$579.99**
51990 65 Direct Fit Radiator - Big Block..... **$699.99**
44275 66-67 Direct Fit Radiator - Big Block - Auto..... **$609.99**
44274 66-67 Direct Fit Radiator - Big Block - Manual **$579.99**
52002 63-67 Direct Fit Radiator - Black Ice - Small Block **$719.99**
52003 65 Direct Fit Radiator - Black Ice - Big Block..... **$729.99**
52004 66-67 Direct Fit Radiator - Black Ice - Auto **$729.99**
52005 66-67 Direct Fit Radiator - Black Ice - BB Manual **$689.99**

WARNING: Cancer and Reproductive Harm — www.P65Warnings.ca.gov

#52032 1963-67 Radiator Module System Small Block - Manual

#52033 1966-67 Radiator Module System - Big Block - Auto

Radiator Module Systems

52032	63-67	Radiator Module System - Small Block - Manual	$889.99
52033	66-67	Radiator Module System - Big Block - Auto	$1069.99
52034	66-67	Radiator Module System - Big Block - Manual	$1049.99

Additional Radiator Components

27354	63-67	Aluminum Radiator Drain Cock	$17.99
32969	66	Aluminum Radiator Drain Plug	$6.99
27353	66-67	Brass Radiator Drain Cock - 427	$3.99
32970	66	Brass Radiator Drain Plug - 427	$3.99
32990	63-67	Rad. Overflow Hose - 427 - also fits 66-67 BB	$10.99
32971	66-67	Radiator Overflow Hose Straps - pr	$2.99
34912	66-67	Radiator Seal - Lower - 327 w/ AC	$12.99
42149	65	Radiator Seal - Upper 396	$15.99
34910	66-67	Radiator Seal w/ Clips - Upper - 327 w/ AC	$45.99
34911	66-67	Radiator Seal w/ Clips - Upper - 427 w/ AC	$45.99
34913	66-67	Rad. Side & Lwr. Seals - 427 w/ AC - 3 pc	$13.99
34914	66-67	Radiator to Shroud Upper Seal - 427 w/ AC	$5.99

Water Wetter®

40853	WaterWetter	$12.99

#1116 1966-67 5 Blade Fan - 17.5 OD, 34.5 Pitch

#1519 1966-67 Fan Shroud

#1515 1963-65 Fan Shroud - 327 Fiberglass - Replacement

#46825 Fan Clutch - Small Block Reproduction

Radiator Fans & Shrouds

1106	63-67	Fan - 5 Blade - 327 w/o AC	$113.99
1112	65	Fan - 5 Blade - 396	$333.99
1116	66-67	Fan - 5 Blade - 427	$245.99
33540	63-67	Fan - 7 Blade - 18" - 327 w/ AC	$254.99
46825	63-67	Fan Clutch - Small Block - Reproduction	$172.99
46826	63-67	Fan Clutch - Big Block - Reproduction	$172.99
44645	63-67	Fan Clutch - Replacement	$86.99
27396	63-67	Fan Clutch to Water Pump Bolt Set - 4 pc	$10.99
K1242	63-67	Fan to Clutch Nut & Lock Washer Set - 8 pc	$2.99
K1303	63-67	Fan to Clutch Studs - 4 pc set	$12.99
27377	63-65	Fan Shroud - 327 - Metal	$407.99
1515	63-65	Fan Shroud - 327 - Fiberglass	$213.99
1516	65	Fan Shroud - 396 - Fiberglass	$458.99
1517	66-67	Fan Shroud - 327 - Fiberglass	$234.99
1519	66-67	Fan Shroud - 427 - Fiberglass	$234.99
42581	66-67	Fan Shroud - Fiberglass	$407.99
29912	63-65	Fan Shroud Bolt & Washer Set - "WB" - 6 pc	$4.99
37006	66-67	Fan Shroud Bolt & Washer Set - "WB" - 4 pc	$3.99
1522	66-67	Fan Shroud Extension - 327	$111.99
1523	66-67	Fan Shroud Extension - 427	$121.99
37005	66-67	Fan Shroud Ext. Bolt & Nut Kit - w/ AC 8 pc	$4.99
29911	63-65	Fan Shroud Seal - Lower - 327	$8.99
42148	65	Fan Shroud Seal - Lower - 396	$12.99
39532	63-65	Fan Shroud Seal Staples - set	$1.99
K1039	65	Fan Shroud U-Nuts - 396 - 6 pc	$6.99
K1040	66-67	Fan Shroud U-Nuts - 4 pc	$4.99

Discounts & Coupons Emailed!

Enter your email address on CorvetteAmerica.com

FAST Shipping!

Fast Service & Delivery!

Most orders are processed & shipped the same day!

WARNING: Cancer and Reproductive Harm — www.P65Warnings.ca.gov

Serving the Corvette Community Since 1977.

#25744

#25745

#0725 1963-65
Top Shroud Bracket - 327

#0726 1966-67
Top Shroud Bracket - 327

Radiator Caps

25744	63-65 Radiator Cap "AC, 307, 13#" - also 65 396	$40.99
25745	63-67 Radiator Cap "AC" & "13#, 307"	$37.99
51151	65-67 Radiator Cap - 16 PSI Replacement	$5.99
25747	66-67 Radiator Cap "AC" & "15#, RC-15"	$31.99
25746	67 Radiator Cap "AC" & "15#, RC-26"	$36.99

#22513 1966-67
Upper Radiator Hose - 427

#22516
1966-67 Lower
Radiator
Hose - 427

Radiator Hoses

22514	63-65 Lower - 327 - #3832170	$38.99
22515	65 Lower - 396 - #3876782	$35.99
22523	66-67 Lower - 327 - #3887155	$31.99
51190	63-65 Lower - 327 - Replacement	$30.99
22516	66-67 Lower - 427 - #3882826	$32.99
22508	63-65 Upper - 327/250,300 w/o AC - #3827366	$26.99
22507	63-65 Upper - 327/250,300 w/ AC - #3833016	$34.99
22509	63-65 Upper - 327 FI & SHP - #3827368	$28.99
51189	63-65 Upper - 327 w/o AC - Replacement	$15.99
22499	65 Upper - 396 - 1st Design - #3873842	$37.99
22510	65 Upper - 396 - 2nd Design - #3879680	$39.99
22512	66-67 Upper - 327 Exc. SHP - #3887154	$26.99
22511	66-67 Upper - 327 SHP - #3887156	$28.99
51191	66-67 Upper - 327 Exc. SHP - Replacement	$16.99
22513	66-67 Upper - 427 - #3906615	$34.99

IN STOCK & READY FOR SHIPPING!

In addition to our regular delivery, we offer more options for getting your packages when you need them. Call our Sales Reps for details.

Top Shroud Bracket

0725	63-65 Top Shroud Bracket - 327	$33.99
0728	65 Top Shroud Bracket - 65 396	$34.99
0726	66-67 Top Shroud Bracket - 327	$27.99
0727	66-67 Top Shroud Bracket - 427	$27.99
0728	67 Top Shroud Bracket - L88	$34.99
29914	63-65 Top Shroud Bracket Bolt Kit - 327	$2.99
37004	65 Top Shroud Bracket Bolt Kit - 396	$4.99
37008	66-67 Top Shroud Bracket Bolt & Washer Set	$6.99

1963-67 TOP SHROUD BRACKET

63-65	327	**#0725**
65	396	**#0728**
66-67	327	**#0726**
66-67	427	**#0727**
67	L88	**#0728**

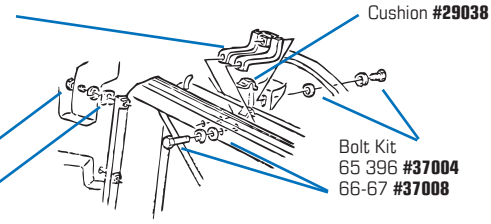

Radiator Supports

40511	63-65 Lower Core Support Channel	$111.99
40512	66-67 Lower Core Support Channel	$111.99
27358	63-67 Radiator Cushion - Lower - 327 & 396	$2.99
29038	63-67 Radiator Cushion - Upper - 327 & 396	$4.99
X2244	66-67 Rad. Mnt Cushion - Upper & Lower 427 - 4 req'd	$3.99
3511	63 Radiator Support - FI	$596.99
3515	64-65 Radiator Support - FI	$596.99
3510	63 Radiator Support w/o AC	$466.99
3512	63 Radiator Support w/ AC	$467.99
3514	64-65 Radiator Support - 327 w/o AC	$399.99
3516	64-65 Radiator Support - 327 w/ AC	$417.99
3518	65 Radiator Support - 396	$607.99
3519	66-67 Radiator Support - 327 w/o AC	$396.99
3520	66-67 Radiator Support - 327 w/ AC	$417.99
3521	66-67 Radiator Support - 427 w/o AC	$396.99
3522	66-67 Radiator Support - 427 w/ AC	$428.99
32979	63-67 Radiator Support & Bumper Shim	$1.09
32975	63-67 Radiator Support Bolt Set - 8 pc	$4.99
K1329	63-67 Radiator Support Bolt & Shim Kit - 18 pc	$9.99
34908	66-67 Rad. Support Brkts - Lower - Weld to Support - pr	$39.99
1004	66-67 Radiator Support Bracket - Upper LH - 427	$18.99
1040	66-67 Radiator Support Bracket - Upper RH - 427	$22.99
34909	66-67 Radiator Support Bracket Bolt Set - 427	$16.99
42141	63-65 Radiator Support Cross Rod Lower Straps - pr	$17.99
42142	63-65 Radiator Support Cross Rods - 327 w/o AC - pr	$23.99
42143	65-67 Radiator Support Cross Rods - 65 396, 66-67 327, 66-67 427 w/o AC - pr	$22.99

800-458-3475
CorvetteAmerica.com

WARNING: Cancer and Reproductive Harm — www.P65Warnings.ca.gov

32973 63-67 Radiator Support to Frame Bolt Set $4.99
32974 63-67 Radiator Support Shim $1.09
33002 63-67 Rad. Lower Support/Body Mount Nut - Square $9.99
32972 63-67 Rad. Lower Support/Body Mount Nut - Square - pr $17.99

#3510 1963 Radiator Support - w/o AC

#3514 1964-65 Radiator Support 327 w/o AC

#3522 1966-67 Radiator Support 427 w/ AC

#X2244 1966-67 Radiator Mount Cushion

#25352 1963 Expansion Tank Strap Set

#1042 Expansion Tank - Replacement

Expansion Tank

37760 63-64 Expansion Tank - Correct Dated - Specify Date... $229.99
37761 65-67 Expansion Tank - Correct Dated - Specify Date... $229.99
1042 63-67 Expansion Tank - Replacement $209.99
27407 63-67 Expansion Tank Aluminum Tubes - 3 pc set $24.99
25354 63 Expansion Tank Bracket Set $20.99
25355 64-67 Expansion Tank Bracket $12.99
36371 64-67 Expansion Tank Bracket to Fender Rivets - 4 pc $1.99
0576 63-67 Expansion Tank Hose & Clamp Set $52.99
30911 63-67 Expansion Tank Hose Clamps - pr $5.99
25352 63 Expansion Tank Strap Set $30.99
25353 64-67 Expansion Tank Straps - pr $11.99
29048 63-67 Expansion Tank Strap Bolts - pr $3.99
28422 63-67 Heater Hose Water "T" $11.99
42145 63-67 Heater Hose "T" Fitting Cap - Heater Delete $5.99
32990 63-67 Hose - Expansion Tank Overflow $10.99
32991 63-67 Hose - Expansion Tank to Radiator $14.99
34900 63-67 Hose Clamps - Expansion Tank to Radiator - pr $4.99
34901 63-67 Hose Clamps - Tank to "T" Hose - pr $6.99

#2608 1966-67 Expansion Tank Cap - RC-26 15#

#0057 1963-65 Expansion Tank Cap - Replacement

Expansion Tank Caps

0057 63-65 Expansion Tank Cap - Replacement $20.99
2608 66-67 Expansion Tank Cap - RC-26 15# $64.99

1963-67 EXPANSION TANK

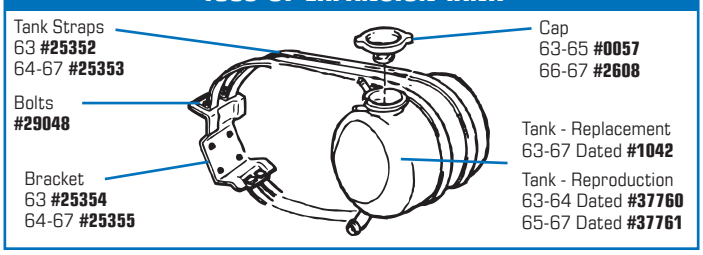

WARNING: Cancer and Reproductive Harm — www.P65Warnings.ca.gov

#40855 1967 Water Pump Dated Rebuilt Small Block HP w/Bypass #326

#44656 1966-67 Water Pump - 427 Replacement

#40854 1963-67 Water Pump - 327/350 Replacement

#27379 1963-67 Water Pump Rebuild Kit - 327

#51097 Chrome Water Pump Pulley - Dual w/Idler

#27553 1963-67 Water Pump Pulley - 340-375 HP Dual Deep Groove

#37017 1963-65 Water Pump Pulley - 250/300 hp Dual

#30855 1967 Water Pump Pulley - 427 w/o AC - Dual

Water Pumps & Rebuild Kits

40855 67 Water Pump - Dated Rebuilt Small Block HP w/ Bypass #326 ..... $356.99
40854 63-67 Water Pump - 327/350 Replacement $45.99
44656 66-67 Water Pump - 427 Replacement $81.99
51050 63-64 Water Pump - #608 - Remanufactured $142.99
27379 63-67 Water Pump Rebuild Kit - 327 ..... $71.99
37009 65 Water Pump Rebuild Kit - 396 ..... $65.99
37010 66-67 Water Pump Rebuild Kit - 427 ..... $61.99

Additional Water Pump Components

32982 63-67 Bypass Hose Fitting in Intake w/ Hi-Performance .. $8.99
34897 65-67 Bypass Hose Fitting - Unthreaded - 396/427 ..... $4.99
K1337 63-67 Heater Hose Clamps - Spring Ring - 5/8" - pr $1.99
K1421 63-67 Heater Hose Clamps - Spring Ring - 3/4" - pr $2.99
34903 64-67 Heater Hose Clips - w/o AC - pr $8.99
27390 63-67 Heater Hose Fitting Adapter - 3/4" - 1/2" NPT $6.99
27388 63-67 Heater Hose Fitting on Intake - 1/2" $7.99
32985 63-67 Heater Hose Fitting in Water Pump - w/ AC - 327 $10.99
32984 63-67 Heater Hose Fitting in Water Pump - w/o AC $10.99
37012 66-67 Heater Hose Fitting in Water Pump - 427 w/ AC... $6.99
34904 63-64 Heater Hose Straps - 15 pc $28.99
34905 65-67 Heater Hose Straps - 15 pc $28.99
34902 63 Heater Hose Straps - Aluminum - w/o AC - pr $5.99
35361 63-67 Plug - Intake / Water Pump Heater Delete $3.99
36351 65-67 Water Pump Attach. Stud - Upper RH - 396/427 . $5.99
36352 66-67 Water Pump Attaching Stud - Upper LH $6.99
42146 65 Water Pump Backplate - 396 Flat $19.99
K1409 63-67 Water Pump Backplate Hex Head Bolts - 6 pc $3.99
42147 65 Water Pump Backplate Screws - 396 - 6 pc $5.99
32976 63-67 Water Pump Bolt Set - 327 w/o AC - 4 pc $6.99
32977 64-67 Water Pump Bolt Set - 327 w/ AC - 4 pc $13.99
32980 65-67 Water Pump Bolt & Stud Set - 4 pc - 396 / 427 . $11.99
34595 63-67 Water Pump Bypass Hose - 327 hp $7.99
33187 65-67 Water Pump Bypass Hose - 396 / 427 ..... $6.99
34899 65-67 Water Pump Bypass Hose Clamps - 396/427 - pr $9.99
32983 63-67 Water Pump Fitting - Top 87° - 327 - 1/2 NPT Replacement w/o CP logo $21.99
44660 63-67 Water Pump Fitting - Top 87° - 327 - 1/2 NPT Reproduction w/ CP logo $32.99
32981 63-67 Water Pump Mount Gasket - 327 - 2 req'd $2.99
33548 65-67 Water Pump Mount Gasket - 396/427 - 2 req'd ... $2.99
27557 66-70 Water Pump Pulley - Alum. Replac. 3 Groove..... $228.99
49540 66-67 Water Pump Pulley - Double Groove 327 Corp... $273.99
51097 63-67 Water Pump Pulley - Dual w/Idler - Chrome $114.99
37017 63-65 Water Pump Pulley - 250-300 hp - Dual Groove - 7" - (#356) $203.99
31063 64-66 Water Pump Pulley, 250-300 hp w/ AC - Double Groove (#680) $198.99
27553 63-67 Water Pump Pulley, 340-375 hp - Dual Deep Groove - Exc. AC 7-1/8" OD $356.99
31065 65 Water Pump Pulley - 350 hp w/ PS - Exc. AC - #846 ..... $113.99
27550 66-67 Water Pump Pulley - 300 hp Single Groove $61.99
31066 65-67 Water Pump Pulley - 396 / 427 w/o AC - Deep Groove Double (#480) $157.99
30855 67 Water Pump Pulley - 67 Late, 427 - Deep Groove Exc. AC (#656) $140.99
27554 66-67 Water Pump Pulley Reinforcement 327 - No AC, 427 w/ AC $3.99

New products always added!
Corvette America.com

NEW

WARNING: Cancer and Reproductive Harm — www.P65Warnings.ca.gov

#32988
1966-67 Thermostat Housing - 300 hp

#27404
Thermostat
180 degree

#0015 1963-67
Hose Clamp Kit - 327

#0121 1967 Hose Clamp Kit - 427 L88

#33643
Temperature Sending Unit

#32986 1963-67 Thermostat Housing - Cast #3827369

Thermostat & Related

33643 63-67 Temperature Sending Unit $26.99
35816 63-67 Temperature Sending Unit Wire Insulation, Terminal & Connector $4.99
27403 63-67 Thermostat - 160° $7.99
27404 63-67 Thermostat - 180° $5.99
27405 63-67 Thermostat - 195° $5.99
50916 63-67 Thermostat - 205° $5.99
32986 63-67 Thermostat Housing - Cast - Correct for 63-65 250/300, 396, 66-67 350 ..... $62.99
32987 63-65 Thermostat Housing - 327/340 - 375 - Stainless $68.99
32988 66-67 Thermostat Housing - Alum. - 300 hp & All 427.. $66.99
51099 63-65 Thermostat Housing - Chrome $15.99
51100 66-67 Thermostat Housing - Chrome $16.99
32989 66-67 Thermostat Housing Bolt Kit $5.99
27399 63-67 Thermostat Housing Bolt Kit - Cast Housing $8.99
37015 65-67 Thermostat Housing Bolt Set - 2 pc 396 & L88 .... $6.99
27402 63-67 Thermostat Housing Gasket $2.99
34896 65-67 Thermostat Housing Spacer - 396, L88 & 427 w/ A.I.R. $33.99
37013 63-65 Thermostat Housing Stud Set - 340 / 375 hp $7.99
27401 63-65 Thermostat Housing Stud Set - Aluminum Housing . $8.99

Cooling System Hose Clamp Kits

All the clamps you need for your radiator, heater, expansion tank, overflow and bypass hoses. Identical to the originals.

Small Block Hose Clamp Kits

0014 63-67 Hose Clamp Kit - 327 ..... $22.99
0015 63-67 Hose Clamp Kit - 327 w/o AC HP $31.99
0016 63-65 Hose Clamp Kit - 327 w/ AC $27.99
0017 63-65 Hose Clamp Kit - 327 w/ AC HP $27.99
0021 66-67 Hose Clamp Kit - 327 w/ AC $21.99
0022 66-67 Hose Clamp Kit - 327 w/ AC HP $27.99

Big Block w/o AC Hose Clamp Kits

0090 65 Hose Clamp Kit - 396 ..... $26.99
0095 66-67 Hose Clamp Kit - 427 ..... $27.99
0122 67 Hose Clamp Kit - 427 3X2 ..... $22.99
0121 67 Hose Clamp Kit - 427 L88 ..... $40.99

Big Block w/ AC Hose Clamp Kits

0104 66-67 Hose Clamp Kit - 427 w/ AC $26.99
0125 67 Hose Clamp Kit - 427 3x2 w/ AC $20.99

Hose Clamp Pliers

Our high-quality Spring Ring Hose Clamp Pliers make installation and removal of hoses a snap.

35362 Spring Ring Hose Clamp Pliers $30.99

Price Match Guarantee

Corvette America will match any competitor's price!
Call 800-458-3475 for details.

WARNING: Cancer and Reproductive Harm — www.P65Warnings.ca.gov

#25309
1965-67 Dash Clock

#26299
Clock Conversion
Kit - Quartz

#0803 1963-64
Clock Bezel - Silver

#44637 1965-67 Fuel Gauge

#31268 1963 Fuel Gauge

#44635 1965-67
Oil Gauge - 60#

#31271 1964
Amp Gauge

#31273
1963
Temperature
Gauge

#42283 1966-67
Temperature Gauge

CLOCK, SPEEDOMETER & TRIP ODOMETER

25309	65-67	Clock	$335.99
0803	63-64	Clock Bezel - Silver	$55.99
0804	65-67	Clock Bezel - Black	$60.99
26299	63-67	Clock Conversion Kit - Quartz	$111.99
25302	65-67	Clock Face w/ Numbers	$50.99
29889	63-67	Clock Knob	$11.99
42123	63-64	Clock Knob Stem	$12.99
42124	65-67	Clock Knob Stem	$10.99
42125	63-67	Clock Knob Stem Spring	$3.99
1561	63-67	Clock Lens	$13.99
42122	63-67	Clock Plug	$1.99
29890	63-67	Clock Retaining Clip	$4.99
49103	65-67	Clock Hands 3 pc set	$50.99
34642	63-67	Clock Terminal, Nut & Lockwasher Set	$3.99
33228	63-67	Speedometer Cable Clip on Firewall	$2.99
X2577	63-67	Speedometer Cable Firewall Grommet - Correct	$8.99
29888	65-67	Speedo / Tach Cable Grommet - 2 Hole - 4 spd	$5.99
42280	63-67	Speedo / Tach Cable Grommet Installation Tool	$8.99
1460	65-67	Speedometer Face	$36.99
1603	63	Speedometer Lens	$15.99
1151	64-67	Speedometer Lens	$15.99
35562	63-67	Speedometer Mounting Cushions - pr	$2.99
35568	63-67	Speedo/Tach Mounting Screw - 2 Required	$3.99
1685	63-64	Speedometer Needle	$52.99
1467	65-67	Speedometer Needle	$20.99
42284	67	Speed Warning Knob	$39.99
44631	63-67	Trip Odometer	$65.99
26619	63-67	Trip Odometer Lens	$12.99
37344	63-67	Trip Odometer Lens Gasket	$6.99
29886	63-64	Trip Odometer Reset Cable w/ Knob & Nut - 64E	$48.99
39905	64-67	Trip Odometer Reset Cable w/ Knob & Nut - 64L	$48.99
42285	63-67	Trip Odometer Reset Knob	$2.99

SMALL GAUGES & COMPONENTS

31270	63	Amp Gauge	$91.99
31271	64	Amp Gauge	$91.99
44633	65-67	Amp Gauge	$69.99
31268	63	Fuel Gauge	$91.99
31269	64	Fuel Gauge	$91.99
44637	65-67	Fuel Gauge	$69.99
1602	63	Gauge Lens - Small - 4 pc set	$28.99
1150	64-67	Gauge Lens - Small	$11.99
31275	63	Oil Gauge - 60 #	$81.99
31276	63	Oil Gauge - 80 #	$90.99
31279	64	Oil Gauge - 80 #	$90.99
44635	65-67	Oil Gauge - 60 #	$69.99
44634	65-67	Oil Gauge - 80 #	$69.99
31277	63	Small Gauge Set - Includes Gauges: Fuel, Ampmeter, Temperature and 60# Oil Gauge	$346.99
31278	64	Small Gauge Set - Includes Gauges: Fuel, Ampmeter, Temperature and 80# Oil Gauge	$346.99
31273	63	Temperature Gauge	$81.99
31274	64	Temperature Gauge	$91.99
44636	65	Temperature Gauge	$69.99
28836	65-67	Temperature Gauge - Adjustable Resistor	$40.99
42283	66-67	Temperature Gauge	$69.99

WARNING: Cancer and Reproductive Harm —
www.P65Warnings.ca.gov

#49103 1965-67
Clock Hands - 3 pc. Set

#1460 1965-67
Speedometer Face

#0210 1964
Radio Knob

#28706 1965
Radio Knob

#0211 1966
Radio Knob

#0212 1967
Radio Knob

#29929 1963-64
Heater Knob

#29930 1965
Heater Knob

#28697
1963-64
Lighter
Knob &
Element

Knobs & Related

42155	63-67	AC Cable - to Upper LH Knob - Replacement	$73.99
42156	63-67	AC Cable - to Upper RH Knob - Replacement	$73.99
37019	63	Dash Knob Set - 3 pc - Headlight, Wiper, Lighter	$80.99
37020	64	Dash Knob Set - 3 pc - Headlight, Wiper, Lighter	$80.99
37021	65	Dash Knob Set - 3 pc - Headlight, Wiper, Lighter	$70.99
37022	66	Dash Knob Set - 3 pc - Headlight, Wiper, Lighter	$70.99
37023	67	Dash Knob Set - 3 pc - Headlight, Wiper, Lighter	$70.99
37024	63	Dash Knob Set - 4 pc - Radio & Heater	$67.99
37025	64	Dash Knob Set - 4 pc - Radio & Heater	$68.99
37026	65	Dash Knob Set - 4 pc - Radio & Heater	$68.99
37027	66	Dash Knob Set - 4 pc - Radio & Heater	$67.99
37028	67	Dash Knob Set - 4 pc - Radio & Heater	$67.99
42153	63-67	Defroster Cable - w/o AC - Replacement	$62.99
42154	63-67	Defroster Cable - w/ AC - Replacement	$62.99
28702	63	Headlight Knob & Rod	$30.99
28654	64	Headlight Knob & Rod	$35.99
28701	65	Headlight Knob & Rod	$30.99
28703	66	Headlight Knob & Rod	$30.99
28704	67	Headlight Knob & Rod	$30.99
29928	63-64	Heater Knob - Defrost & AC - Screw On	$22.99
29930	65	Heater Knob - Defrost & AC - Screw On	$22.99
29933	66	Heater Knob - Defrost & AC - Screw On	$23.99
29935	67	Heater Knob - Defrost & AC - Screw On	$22.99
29929	63-64	Heater Knob - Fan - Set Screw	$22.99
29931	65	Heater Knob - Fan - Set Screw	$22.99
29932	66	Heater Knob - Fan - Set Screw	$22.99
29934	67	Heater Knob - Fan - Set Screw	$22.99
37030	64-65	Knob Spacers - Heater and / or AC - pr	$28.99
37031	66-67	Knob Spacers - Heater and / or AC - pr	$28.99
32994	64-65	Knob Spacer Set - Radio/Heater - w/o AC - 4 pc	$52.99
32995	66-67	Knob Spacer Set - Radio/Heater - w/o AC - 4 pc	$52.99
28697	63-64	Lighter Knob & Element	$34.99
28698	65	Lighter Knob & Element	$32.99
28699	66	Lighter Knob & Element	$32.99
28700	67	Lighter Knob & Element	$32.99
0210	64	Radio Knob - Set Screw Type	$22.99
28706	65	Radio Knob	$22.99
0211	66	Radio Knob	$24.99
0212	67	Radio Knob	$27.99
29936	63-64	Wiper Knob - w/ Windshield Washer	$23.99
29937	65	Wiper Knob	$23.99
29938	66	Wiper Knob	$22.99
29939	67	Wiper Knob	$23.99

#1774 1963 Dash
Indicators Set

#1645 1964
Dash Indicators
Set

#1572 1965-67
Dash Indicators
Set

Dash Indicators

1774	63	Dash Indicators - 4 pc	$81.99
26616	63	Dash Indicators - Air - 6 pc	$264.99
1775	63	Dash Indicators - Radio - 2 pc	$39.99
1645	64	Dash Indicators - 4 pc	$14.99
1646	64	Dash Indicators - Air - 6 pc	$24.99
1572	65-67	Dash Indicators - 4 pc	$19.99
1573	65-67	Dash Indicators - Air - 6 pc	$22.99

#28428 1965-66
Firewall Insulation
with Fasteners

Firewall Insulation Sets

42152	65-67	Firewall Insulation - Heater Delete	$50.99
24573	63-67	Firewall Insulation Fasteners - 7 pc	$11.99
42150	63-67	Firewall Insulation Fastener Tool	$5.99
28426	63	Firewall Insulation Set w/ Fasteners - 63E	$261.99
28427	63-64	Firewall Insulation Set w/ Fasteners - 63L	$261.99
28428	65-66	Firewall Insulation Set w/ Fasteners	$259.99
28429	67	Firewall Insulation Set w/ Fasteners	$259.99

FAST Shipping!

Fast Service & Delivery
Most orders are processed & shipped the same day!

WARNING: Cancer and Reproductive Harm —
www.P65Warnings.ca.gov

#1528 1965-67
High Horsepower Tachometer

#37242 Speedometer Cable

#X2521 Speed / Tach Adapter

TACHOMETERS

26630	63	Instrument Lens Set - Includes: Speedometer Lens, Tach Lens, Small Gauge Lens Set - 4 pc, Clock Lens & Trip Odometer Lens $75.99
1526	65-67	Tachometer - Low hp $183.99
1527	65-67	Tachometer - Mid hp $235.99
1528	65-67	Tachometer - High hp $235.99
37238	63-64	Tachometer Cable - Gray Case - 25" $32.99
51338	64	Tachometer Cable - Ivory Case - 22" $37.99
37239	65-67	Tachometer Cable - Black Case $30.99
28841	63-67	Tachometer Conversion Kit - Electronic $176.99
29888	65-67	Tacho / Speedo Cable Grommet - 2 Hole - 4 spd ... $5.99
1426	65-67	Tachometer Face - Low hp - 5300 RPM RedLine . $45.99
1427	65-67	Tachometer Face - Mid hp - 6000 RPM RedLine . $45.99
1428	65-67	Tachometer Face - High hp - 6500 RPM RedLine $45.99
1603	63	Tachometer Lens $15.99
1151	64-67	Tachometer Lens $15.99
35562	63-67	Tachometer Mounting Cushions - pr $2.99
1685	63-64	Tachometer Needle $52.99
1467	65-67	Tachometer Needle $20.99
33171	63-67	Turn Signal / Brake Light Dash Lenses 2 Green, 1 Red - 3 pc set $40.99

SPEEDOMETER

33172	63-67	Dash Lens Gasket Set $11.99
26630	63	Instrument Lens Set - Includes: Speedometer Lens, Tach Lens, Small Gauge Lens Set - 4 pc, Clock Lens & Trip Odometer Lens $75.99
44632	63-67	Odometer $67.99
1604	63-67	Odometer Drive Gear $12.99
37240	63-64	Speedometer Cable - Gray Case $33.99
37242	65-67	Speedometer Cable - 4 spd $35.99
37243	65-67	Speedometer Cable - Auto & 3 spd $30.99
35530	68-82	Speedo Gear Housing - TH350 - 36-39 Tooth $48.99
35531	68-82	Speedo Gear Housing - TH350 - 40-45 Tooth $48.99
35532	68-82	Speedo Gear Housing - TH400 - 36-39 Tooth $48.99
35533	68-82	Speedo Gear Housing - TH400 - 40-43 Tooth $48.99

SPEEDOMETER / TACH CABLE ADAPTER

Eliminates the 90° bend and the wear that it causes in your speedometer & tachometer cables. Installs with common hand tools in about 5 minutes. Grease fitting allows proper cable lubrication.

X2521 Speedometer / Tach Cable Adapter $40.99

GAUGE PAINT

1454 63-67 Gauge Cluster Paint - Black - Aerosol $35.99

MISCELLANEOUS DASH ITEMS

34653	63-67	AC Ind. Bulb Metal Sockets & Shades - 3 pc $79.99
42158	63-67	Courtesy Light Bracket - w/ Screw $9.99
1454	63-67	Dash Cluster Paint - Black $35.99
33001	63-67	Dash Cluster Screws - 5 pc $6.99
K1189	63-67	Dash Cluster U-Nuts - 5 pc $3.99
K1452	63-67	Dash Frame Mount Screws - 10 pc $7.99
K1306	63-67	Dash Frame Mount U-Nuts - 10 pc $6.99
34641	63-67	Dash Frame Rivets - Black - 10 pc $3.99
K1077	63-64	Dash Insert Screws - 4 pc $1.99
K1078	64-66	Dash Insert Screws - 6 pc $1.99
43606	63-66	Dash Light Bulb Socket - 5/8" Hole $12.99
41832	63-67	Dash Pad Clip - CA $2.99
X2065	63-67	Dash Pad Clips - 14 pc set - CA $30.99
K1305	63-67	Dash Pad Nuts & Washers - 4 pc $1.99
34648	65-67	Flasher Bracket & Screw $12.99
34958	63-67	Fuse Block Gasket $3.99
35301	63-67	Fuse Block Mounting Plate w/ Rivets $11.99
35302	63-67	Fuse Block Mounting Screws $1.99
40379	63	Fuse Block Repair Kit $126.99
40380	64-66	Fuse Block Repair Kit $126.99
40381	67	Fuse Block Repair Kit $126.99
34926	63-67	Gauge Cluster Rear Case Screws - 12 pc $8.99
25816	63-66	Headlight Door / Pwr Window Circuit Breaker $14.99
25819	67	Headlight Door / Pwr Window Circuit Breaker $22.99
34920	63-66	Headlight Motor Circuit Breaker w/ Nuts $13.99
34921	63-66	Headlight Motor Circuit Breaker Clip $15.99
34922	63-67	Headlight Switch Nut w/ Bushing $16.99
42168	64-67	Headlight Switch Plug & Terminal Kit $51.99
32998	63-67	Heater / AC Light Socket Holder Green Cover $9.99
32996	64-67	Heater Bulb Socket Holder & Shade $29.99
34643	63-67	Heater Cable Retaining Nut $5.99
27417	63-65	Ignition Switch Nut $14.99
37029	66-67	Ignition Switch Nut $11.99
34927	63-65	Ignition Switch Nut Wrench $11.99
34928	66-67	Ignition Switch Nut Wrench $9.99
37633	63-67	Instrument Panel Bulb Socket $4.99
K1090	63-64	Kick Panel Screws - 14 pc $4.99
K1091	65-67	Kick Panel Screws - 12 pc $5.99
34647	67	Kick Panel Screws - 12 pc $13.99
52411	63-67	Lighter Assembly $29.99
32404	63-67	Lighter Bulb Shade $17.99
52409	63-67	Lighter Housing - Female - In Dash $9.99
33003	63-67	Lighter Housing in Dash - Female - 2 pc $22.99
34924	63-67	Lighter Housing Retainer $15.99
52410	63-67	Lighter Housing Retainer - Replacement $9.99
K1343	63-67	Speaker Grille Speednuts Set $1.99
42165	63	Steering Column Collar $72.99
42166	64-66	Steering Column Collar $72.99
42167	67	Steering Column Collar $77.99
34917	63	Steering Column Collar Insulator & Retainer $15.99
34918	64-67	Steering Column Collar Insulator & Retainer $15.99
K1262	63-67	Steering Column Collar Screws - pr $1.99
29886	63-64	Trip Odometer Reset Cable w/ Knob & Nut - 64E $48.99
39905	64-67	Trip Odometer Reset Cable w/ Knob & Nut - 64L. $48.99
28431	63-67	Upper Dash Sound Deadener Above Insul. 2 pc $79.99
34923	63-67	Wiper Switch Nut $6.99

WARNING: Cancer and Reproductive Harm — www.P65Warnings.ca.gov

#1539 1964-65 Glove Box Door Assembly

#1776 1964-65
Glove Box Door Emblem

#23830 1964-67
Glove Box Lock

Glove Box

1126	63	Glove Box Door Assembly	$509.99
1539	64-65	Glove Box Door Assembly	$320.99
1046	66-67	Glove Box Door Assembly	$341.99
26617	63	Glove Box Door Front	$432.99
1776	64-65	Glove Box Door Emblem	$40.99
1777	66-67	Glove Box Door Emblem	$40.99
29926	63-67	Glove Box Door Bumpers - pr	$2.99
29921	63-67	Glove Box Door Hinge	$43.99
34657	63-67	Glove Box Door Hinge Support Screws - 7 pc	$7.99
34658	63	Glove Box Door-to-Hinge Screws & Washers Set	$2.99
34659	64-67	Glove Box Door-to-Hinge Screws & Washers Set	$2.99
42161	63	Glove Box Door Reinforcement	$10.99
29922	63-67	Glove Box Door Striker	$9.99
34656	63-67	Glove Box Door Striker Screws - pr	$1.99
29925	63-67	Glove Box Door Support Rod Grommets - pr	$2.99
34637	63-67	Glove Box Frame Screws - 6 pc set	$5.99
K1042	63-67	Glove Box Frame U-Nuts - 6 pc set	$4.99
42162	63-67	Glove Box Hinge Spring Screw & Washer	$0.99
44889	63-67	Glove Box Light Assembly - Includes: Switch Socket & Wiring Harness	$15.99
42164	63-67	Glove Box Light Bulb	$0.99
29924	63-67	Glove Box Light Bulb Shield	$8.99
29923	63-67	Glove Box Light Switch / Socket	$6.99
1670	63-67	Glove Box Liner - Assembled	$18.99
K1085	63-67	Glove Box Liner Screws - 9 pc set	$4.99
23830	64-67	Glove Box Lock	$24.99
42163	63	Glove Box Lock Housing	$16.99
34660	63	Glove Box Lock Retainer	$8.99
33248	64-67	Glove Box Lock Retainer	$8.99
34661	63-67	Glove Box Lock Retainer Screw & Washer	$1.99
34664	63	Glove Box Lower Reinforcement - No AC - Before 4/15/63	$36.99
34665	63-64	Glove Box Lower Reinforc. - 4/15/63 to 10/1/63	$36.99
34666	64-67	Glove Box Lower Reinforcement - After 10/1/63	$36.99

1963-67 GLOVE BOX

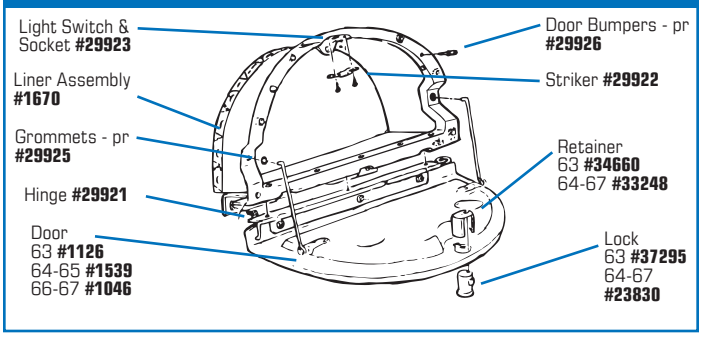

Decals

Air Cleaner Decals

0296	63-64	Air Cleaner Decal - FI Instructions	$4.99
0297	65	Air Cleaner Decal - FI Instructions	$4.99
0425	65	Air Cleaner Decal - 396	$2.99
0305	65	Air Cleaner Decals - 396 / 425 - pr	$4.99
0426	65-66	Air Cleaner Decal - 425	$2.99
0306	66	Air Cleaner Decals - 427 / 425 - pr	$4.99
37032	66	Air Cleaner Decals - 427 / 450 - pr	$4.99
0424	66	Air Cleaner Decal - 450	$2.99
0423	66-67	Air Cleaner Decal - 390	$2.99
0307	66-67	Air Cleaner Decals - 390 / 427 - pr	$4.99
0422	66-67	Air Cleaner Decal - 427	$2.99
0298	67	Air Cleaner Decal - 327 / 300	$4.99
0299	67	Air Cleaner Decal - 327 / 350	$4.99
0308	67	Air Cleaner Decal - 427 / 400	$4.99
0309	67	Air Cleaner Decal - 427 / 435	$4.99

Air Conditioning Decals

37035	63-65	AC Compressor Warning Decal	$4.99
37036	64-65	AC Compressor Decal - Frigidaire	$4.99
37037	66	AC Compressor Decal - Frigidaire	$4.99
36390	67	AC Compressor Decal - Frigidaire	$4.99
0173	63	AC Glove Box Instructions	$4.99
0326	65	AC Decal - Foil Plate	$4.99
0327	66	AC Decal - Foil Plate	$5.99
0328	67	AC Decal - Foil Plate	$4.99
0324	63-65	AC Decal - Window	$4.99
37033	66	AC Decal - Window	$4.99

Brake System Decals

37042	63	Brake Instructions - Z06 - Glove Box	$3.99
37043	63-64	Brake Instructions - J56 - Glove Box	$2.99
36446	67	Master Cylinder Bail Label - Manual Brake	$2.99
36445	67	Master Cylinder Bail Label - Power Brake	$5.99
37041	67	Power Brake Booster Check Valve Label	$5.99

Cooling System Decals

0372	63	Caution Decal-Rear of Expansion Tank	$4.99
0339	65-67	Coolant Instruction Decal - 65 396, 67 L88	$4.99
37054	66-67	Fan Shroud Inspect. Labels - 427 w/o AC - 3 pc	$2.99
37055	66-67	Fan Shroud Inspect. Labels - 427 w/ AC - 4 pc	$3.99
35391	63	Harrison Radiator Metal Plate - Blank	$11.99
0352	63-67	Harrison Radiator Decal - Foil	$4.99
0354	63-67	Inspection Number Decals - Expansion Tank & Top LH Radiator - pr	$2.99
0373	63-64	Radiator Caution Decal - 63 L, 64 E	$4.99
0374	64-66	Radiator Caution Decal - Frame or Shroud	$4.99

WARNING: Cancer and Reproductive Harm —
www.P65Warnings.ca.gov

#0306 1966
Air Cleaner Decal

#37038 1967
GM Mark of Excellence

Engine Compartment Decals

0343	63-65	Gas Filter Decal	$4.99
37039	63	Heater Inspection Decals - 2 pc set	$3.99
37040	64-67	Heater Inspection Decals - 2 pc set	$3.99
36472	66-67	M22 Transmission Lubricant Tag	$5.99
0365	63-67	Oil Filter Decal	$4.99
0363	63	Oil Filter Cap Decal	$4.99
35383	63-64	PCV Valve Tag "CV-590"	$3.99
36447	66-67	PCV Tag "736C" - 427 Exc HD	$2.99
0767	64-67	Transistor Ignition Decals - pr	$7.99

Interior Decals

0349	64-66	Glove Box - Knockoff Wheel Instructions	$4.99
0346	66	Glove Box - Tire Pressure	$4.99
0347	67	Glove Box - Tire Pressure	$4.99
0350	67	Glove Box - Trim Ring Card	$4.99
0351	67	GM Mark of Excellence - Door - Foil - pr	$4.99
37038	67	GM Mark of Excellence - Door - Metal - pr	$7.99
37048	65-66	Hazard Warning Switch Tag	$5.99
37046	67	Key Envelope - Glove Box	$5.99
0182	67	Octane Warning Decal, L88	$4.99
37045	65	Owner's Manual Insert - 396 Engine	$4.99
37071	64-66	Seat Belt Buckle Decals - Original - pr	$8.99
37047	65-66	Seat Belt Retractor Instruction Tags - pr	$6.99
37072	66-67	Shoulder Harness Decals on Buckle - pr	$19.99
37044	63-64	Warranty Book Envelope	$5.99

Jacking Instructions & Related Decals

0357	63-64	Jacking Instruction Decal	$5.99
0359	63-66	Jacking Instruction Decal w/ Knockoff Wheels	$4.99
37051	63-66	Jacking Instructions - w/ 36 Gallon Tank	$10.99
37052	63-66	Jacking Instructions - w/ 36 Gallon Tank & Knockoff Wheels	$10.99
0353	65-66	Jacking Instruction Decal	$5.99
0358	67	Jacking Instruction Decal	$4.99
37053	65-67	Jack Board Carpet Inspection Number Label	$1.99
0367	63-67	Positraction Decal	$4.99

Radio Information

37060	63	AM / FM Pocket Guide	$7.99
37061	64	AM / FM Pocket Guide	$7.99
37062	65	AM / FM Pocket Guide	$7.99
37057	63	FM Radio Antenna Card - 63E - Mar - Apr	$3.99
37058	63	FM Radio Antenna Card - 63L - Apr - Jun	$3.99
37059	64-66	FM Radio Antenna Card	$3.99
0793	67	FM Radio Antenna Card	$4.99
0375	63	Radio Instructions - Wonderbar	$4.99
0376	63	Radio Instructions - AM/FM	$4.99
37056	64	Radio Instructions - AM/FM	$4.99
0377	65-67	Radio Instructions - AM/FM	$4.99

Suspension Decals

36453	64-67	Front Coil Spring Labels - HD Susp - "EA" - pr	$3.99
37063	64-67	Front Coil Spring Labels - Standard - "ED" - pr	$4.99
37064	65-67	Front Coil Spring Labels - 396 / 427 - "EB" - pr	$4.99
37065	66-67	Front Coil Spring Labels - 427 w/ AC - "EF" - pr	$4.99
36458	63-67	Front Sway Bar Tag - 327 Standard	$3.99
37066	65-67	Front Sway Bar Tag - 396 / 427 Standard	$4.99
37067	63-67	Front Sway Bar Tag - F40, F41 & Z06 Standard	$3.99
37049	63-64	Limited Slip Rear End Metal Tag	$6.99
37050	65	Rear End Red Tag - Positraction	$9.99
37170	66-67	Rear End Red Tag - Positraction	$8.99
36460	63-67	Shock Labels - Standard Susp. - EN & EP - 4 pc	$6.99
37069	64-65	Shock Labels - HD Suspension - 4 pc set	$7.99
37070	66-67	Shock Labels - Standard Suspension - 4 pc	$7.99
36459	66-67	Shock Labels - HD Suspension - 4 pc	$6.99

Valve Cover Decals

35395	63	Chevrolet 327 Turbo Fire - Metal - pr	$10.99
0394	63-65	Chevrolet 327 Turbo Fire - Foil - pr	$4.99
0397	67	VC Decal, Flint #1	$4.99
0395	67	VC Decal, Tonawanda #1	$4.99
0387	63-65	VC Decals, 250 hp - pr	$4.99
0388	63-65	VC Decals, 300 hp - pr	$4.99
0389	63	VC Decals, 340 hp - pr	$4.99
0390	63	VC Decals, 360 hp - pr	$4.99
0392	64-65	VC Decals, 365 hp - pr	$4.99
0393	64-65	VC Decals, 375 hp - pr	$4.99
0391	65-66	VC Decals, 350 hp - pr	$4.99
0398	66	VC Decals, 300 hp - pr	$2.99

Valve Cover Engine Code Decals

Used on rear of passenger side valve cover.
Indicates horsepower / transmission combination.

36474	66-67	"HE" - 300 hp - Manual	$2.99
36475	66-67	"HO" - 300 hp - Auto	$2.99
37073	66-67	"HH" - 300 hp - K19 & Manual	$1.99
37074	66-67	"HR" - 300 hp - K19 & Auto	$1.99
36476	66-67	"HT" - L79 350 hp - 4 spd	$2.99
36477	66-67	"HP" - L79 350 hp - 4 spd w/ AC & PS	$2.99
37075	66-67	"HD" - L79 350 hp - K19 & 4 spd	$1.99
37076	66-67	"KH" - L79 350 hp - K19 w/ AC & PS	$3.99
36478	66-67	"IL" - L36 390 hp - 4 spd	$2.99
36479	66-67	"IQ" - L36 390 hp - Auto	$2.99
36482	66-67	"IM" - L36 390 hp - K19 & 4 spd	$1.99
37077	66	"IP" - L72 425 hp - 4 spd	$1.99
37078	66	"IK" - L72 425 hp - M22 - 4 spd	$1.99
36484	66-67	"IR" - L36 390 hp - K19 & Auto	$2.99
37079	67	"JC" - L68 400 hp - 4 spd	$2.99
37080	67	"JF" - L68 400 hp - K19 & 4 spd	$1.99
37081	67	"JD" - L68 400 hp - Auto	$1.99
37082	67	"JG" - L68 400 hp - K19 & Auto	$1.99
36481	67	"IT" - L88 430 hp - HD w/ M22	$2.99
36480	67	"IU" - L89 435 hp - 4 spd w/ Aluminum Heads	$1.99
37083	67	"JE" - L71 435 hp - 4 spd	$2.99
37084	67	"JA" - L71 435 hp - K19 & 4 spd	$2.99
37085	67	"JH" - L89 435 hp - K19 & 4 spd	$1.99

Window

46831	63-65	Window Sticker	$4.99

800-458-3475
CorvetteAmerica.com
WARNING: Cancer and Reproductive Harm — www.P65Warnings.ca.gov

#37050 1965
Rear End Red Tag

#39395 1963
Valve Cover Decal

#37114 1967 Decal Set - 300 hp - 7 pc

Decal Sets

Include Air Cleaner Decal, Jacking Instructions, Oil Cannister Decal, Fan Shroud Decal, Foil Radiator Decal, and Valve Cover/ HP/ Engine Size Decal where applicable. Order additional decals separately.

37087	63	Decal Set - 340 hp w/ Knockoff Wheels - 7 pc	$18.99
37089	63	Decal Set - 360 hp w/ Knockoff Wheels - 8 pc	$18.99
37091	63-65	Decal Set - 250 hp w/ Knockoff Wheels - 8 pc	$21.99
37093	63-65	Decal Set - 300 hp w/ Knockoff Wheels - 9 pc	$21.99
37095	64-65	Decal Set - 350 hp w/ Knockoff Wheels - 7 pc	$18.99
37097	64-65	Decal Set - 365 hp w/ Knockoff Wheels - 7 pc	$18.99
37099	64-65	Decal Set - 375 hp w/ Knockoff Wheels - 8 pc	$18.99
37101	65	Decal Set - 425 hp w/ Knockoff Wheels - 5 pc	$18.99
37103	66	Decal Set - 300 hp w/ Knockoff Wheels - 7 pc	$21.99
37105	66	Decal Set - 350 hp w/ Knockoff Wheels - 7 pc	$21.99
37109	66	Decal Set - 390 hp w/ Knockoff Wheels - 6 pc	$23.99
37107	66	Decal Set - 425 hp w/ Knockoff Wheels - 6 pc	$23.99
37086	63	Decal Set - 340 hp w/ Steel Wheels - 7 pc	$18.99
37088	63	Decal Set - 360 hp w/ Steel Wheels - 8 pc	$18.99
37090	63-65	Decal Set - 250 hp w/ Steel Wheels - 8 pc	$21.99
37092	63-65	Decal Set - 300 hp w/ Steel Wheels - 9 pc	$21.99
37094	64-65	Decal Set - 350 hp w/ Steel Wheels - 7 pc	$18.99
37096	64-65	Decal Set - 365 hp w/ Steel Wheels - 7 pc	$18.99
37098	64-65	Decal Set - 375 hp w/ Steel Wheels - 8 pc	$18.99
37100	65	Decal Set - 425 hp w/ Steel Wheels - 5 pc	$18.99
37102	66	Decal Set - 300 hp w/ Steel Wheels - 7 pc	$21.99
37104	66	Decal Set - 350 hp w/ Steel Wheels - 7 pc	$21.99
37108	66	Decal Set - 390 hp w/ Steel Wheels - 6 pc	$23.99
37106	66	Decal Set - 425 hp w/ Steel Wheels - 6 pc	$23.99
37114	67	Decal Set - 300 hp - 7 pc	$21.99
37113	67	Decal Set - 350 hp - 7 pc	$21.99
37115	67	Decal Set - 390 hp - 7 pc	$23.99
37112	67	Decal Set - 400 hp - 6 pc	$21.99
37111	67	Decal Set - 435 hp - 6 pc	$21.99

*Post some photos of **your** Corvette on our **Facebook** page!*

Like, Watch & Follow Corvette America!

Corvette America

Serving the Corvette Community
Since '77

800-458-3475 • CorvetteAmerica.com

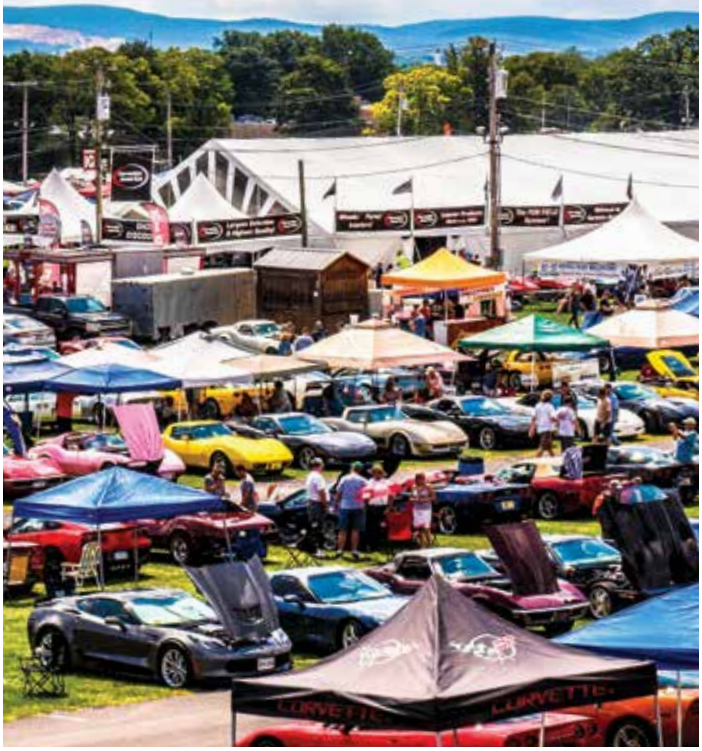

DOOR HANDLE KITS

Exact reproductions of the original! Include LH & RH Handles with Buttons, Rods, Guides, Springs, Retainer, Gaskets & Mounting Hardware.

20398 63-64 Door Handle Kit - Outside - Trim Parts $91.99
44888 63-64 Door Handle Kit - Outside - Imported $71.99
20399 65-67 Door Handle Kit - Outside - Trim Parts $91.99
42934 65-67 Door Handle Kit - Outside - Imported $61.99

DOOR HANDLE

34691 63-64 Armrest Nut Plate & Rivets - 2 req'd $7.99
34692 65-67 Armrest Nut Plate & Rivets - 2 req'd $7.99
K1066 63-64 Armrest Pad Screws - 4 pc $1.99
K1055 63-64 Armrest Screws - 4 pc $3.99
34675 65-66 Armrest Screws & Washers - 4 pc $4.99
1576 63-64 Door Handle Gasket Set - 4 pc $3.99
1577 65-67 Door Handle Gasket Set - 4 pc $3.99
1063 63-67 Door Handle Push Button Set - 8 pc - Includes: Buttons, Rods, "O" Rings, Retainers & Springs.... $29.99
35428 63-67 Door Handle Push Button O-Rings - pr $1.99
35429 63-67 Door Handle Push Button Retainers - pr $5.99
35427 63-67 Door Handle Push Button Springs - pr $6.99
1049 63-64 Door Handle Reinforc. Plates - 63 - 64E - pr..... $24.99
1050 64-67 Door Handle Reinforc. Plates - 64L - 67 - pr..... $11.99
33007 63-67 Door Handle Screws - 4 pc $2.99
27513 63-66 Door Latch Lock Mechanism $174.99
29945 63-66 Door Latch Mechanism Repair Kit - pr $40.99
29948 67 Door Latch Mechanism Repair Kit - pr $44.99
42184 63-67 Door Latch Mechanism Spring - LH $5.99
42185 63-67 Door Latch Mechanism Spring - RH $5.99
34682 63-67 Door Latch Screws - 8 pc $6.99
23811 63-66 Door Locks - pr $39.99

1963-67 DOOR HANDLE

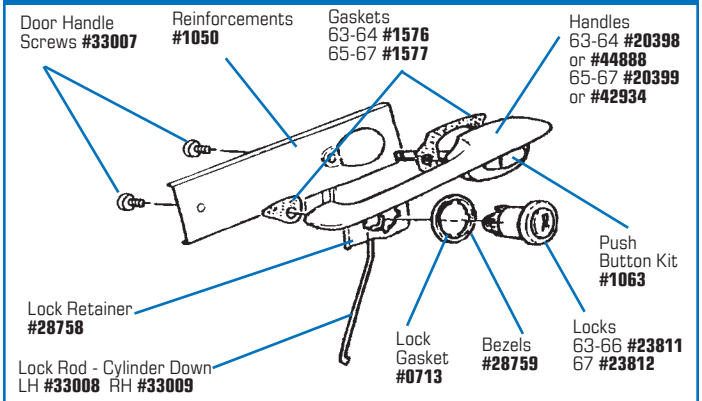

COUPE DOOR COMPONENTS

33019 63-65 Door Access Plate Front - LH $21.99
33020 63-65 Door Access Plate Front - RH $21.99
33021 63-65 Door Access Plate Rear - LH $23.99
33022 63-65 Door Access Plate Rear - RH $23.99
32684 63-67 Door Access Plate Caulk Strip $7.99
33023 63-65 Door Access Plate Mount Kit $6.99
33015 63-67 Door Hinge Pin & Bushing Set - 12 pc $18.99
34684 63-67 Door Hinge Screws - 32 pc $55.99
33018 63-67 Door Hinge Shim $2.99
33017 63-67 Door Hinge Striker Springs w/ Rivets - pr $18.99
23812 67 Door Locks - pr $28.99
28759 63-67 Door Lock Bezel $9.99
33044 63-66 Door Lock Control $32.99
33045 67 Door Lock Control - Front $32.99
33046 67 Door Lock Control - Rear $32.99
34693 63-67 Door Lock Control Mount Screws - 4 pc $3.99
0713 63-67 Door Lock Gasket $2.99
28758 63-67 Door Lock Retainer $10.99
33008 63-67 Door Lock Rod - Cylinder Down - LH $7.99
33009 63-67 Door Lock Rod - Cylinder Down - RH $7.99
33047 63-67 Door Lock Rod - Rear Vertical $7.99
33048 67 Door Lock Rod - Front Horizontal $10.99
K1226 63-67 Door Lock Rod Retainers - pr $1.99
1575 63 Door Open Knob - Black $9.99
1059 64-67 Door Open Knobs - Chrome - pr $16.99
1736 63-67 Door Open Mechanism - LH $15.99
1735 63-67 Door Open Mechanism - RH $15.99
33041 63-67 Door Open Mechanism Screws - 4 pc $2.99
34673 63-67 Door Open Mechanism Shields - pr $5.99
34671 63-67 Door Open Mechanism Springs - pr $3.99
33042 63-67 Door Open Rod $10.99
37388 63-67 Door Open Rod & Lock Rod Clip $1.99
33043 63-67 Door Open Rod Cloth Sleeves - pr $5.99
K1086 65-67 Door Panel Clip Screws - 10 pc $3.99
K1074 63-64 Door Panel Screws & Washers - 40 pc $7.99
39939 63-67 Door Panel Vapor Barriers - pr $24.99
34680 66-67 Door Pull Reinforcements w/ Rivets - pr $21.99
34678 65 Door Pull Handle Screws - Black - 4 pc $3.99
29941 63-67 Front Window Runs - Coupe - w/ Mntg Kit - pr... $53.99
29944 63-67 Power Window Conduits - pr $96.99
34683 63-67 Power Window Conduit Screw & Nut Set $1.99
29177 63-67 Power Window Motor Adapter Harness $15.99
29943 63-67 Power Window Regulator Gear $36.99
29151 63-67 Power Window Regulator - w/ Power Windows . $203.99
33011 63-67 Rear Window Run - Coupe - LH - 63L $61.99
33012 63-67 Rear Window Run - Coupe - RH - 63L $61.99
42187 63-67 Rear Window Run Screw & Washer Set $5.99
34689 63-67 Vent Crank Foam Seals - Behind Panel - pr $4.99
33031 63-67 Vent Regulator Bracket - Coupe - LH $15.99
33032 63-67 Vent Regulator Bracket - Coupe - RH $15.99
34690 63-67 Vent Reg. Bracket Mount Bolts - Coupe - 6 pc $4.99
33030 63-67 Vent Regulator Mount Screws - Coupe - set $4.99
X2605 63-64 Vent Regulator Gear Repair Kit $40.99
K1371 63-67 Vent Window Assembly Screws - Coupe - 12 pc ... $2.99
37136 63-67 Vent Window Ass'y Lower Studs w/ Nuts - pr $24.99
25401 63-67 Vent Window Frame T-Post - Coupe - LH $19.99
25402 63-67 Vent Window Frame T-Post - Coupe - RH $19.99
25405 63-67 Vent Window Hinge - Coupe - LH - on Window $7.99
25406 63-67 Vent Window Hinge - Coupe - RH - on Window $7.99
37134 63-67 Vent Window Hinge Rivet - Coupe $1.99
37137 63-67 Vent Window to Regulator Screws - pr $3.99
42192 63-67 Vent Window Trim - LH Inner - SS $56.99
42193 63-67 Vent Window Trim - RH Inner - SS $56.99

WARNING: Cancer and Reproductive Harm — www.P65Warnings.ca.gov

42194	63-67	Vent Window Trim - LH Outer - SS	$56.99
42195	63-67	Vent Window Trim - RH Outer - SS	$56.99
43552	67	Window Crank - Clear	$9.99
34688	63-67	Window Crank Foam Seals - Behind Panel - pr	$4.99
29152	63-67	Window Regulator - w/ Manual Windows	$203.99
42186	63-67	Window Regulator Gear - w/o Power Window	$37.99
34687	63-67	Window Regulator to Door Screws - 8 pc	$6.99
33036	63-67	Window Regulator Roller Track - Lower Short	$19.99
33037	63-67	Window Regulator Roller Track - Upper Long	$23.99
33035	63-67	Window Regulator Roller Track Fastener Set	$3.99
33033	63-67	Window Regulator & Track Roller / Rivet Set	$19.99
42190	63	Window Run - Rear - LH - 63E	$84.99
42191	63	Window Run - Rear - RH - 63E	$84.99
1661	63-67	Window Seals - Outer - Coupe - USA - pr	$24.99
52207	63-67	Window Seals - Outer - Coupe - Import - pr	$14.99
42200	65-67	Window Seal Rivet Set	$2.99
K1359	63-67	Window Seal Screw Set	$2.99

#1736 1963-67 Door Opening Mechanism - LH

#28759 1963-67 Door Lock Bezel

1963-67 COUPE DOOR

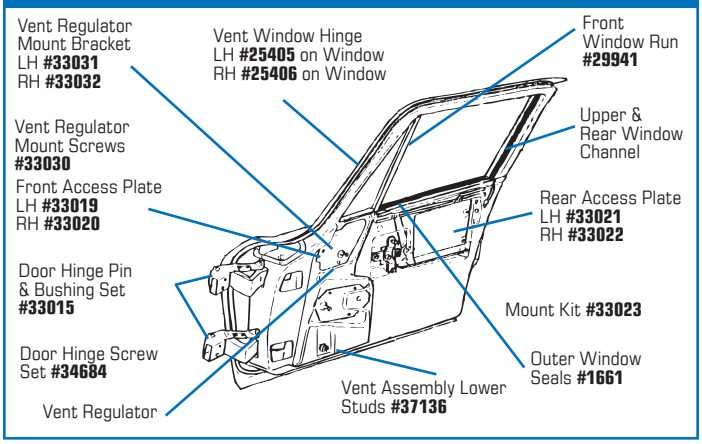

1963-67 DOOR CONTROLS

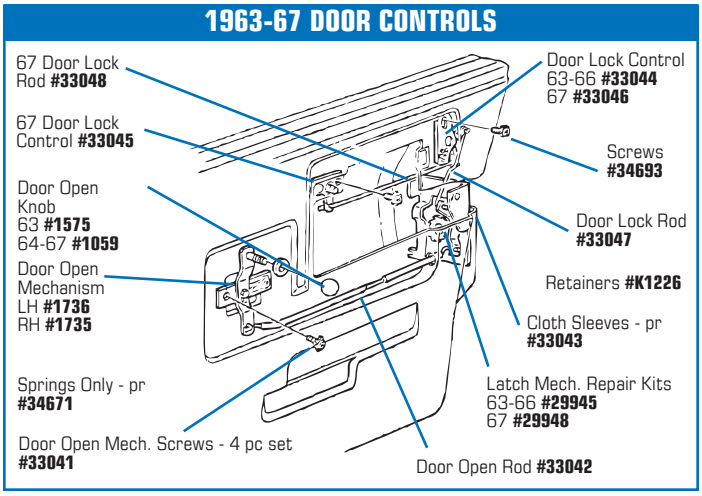

#43306 1963-64 Coupe Vent Regulator - LH

#43309 1965-67 Convertible Vent Regulator - RH

Vent Regulators

43306	63-64	Vent Regulator - LH Coupe - Trim Parts	$142.99
43307	63-64	Vent Regulator - RH Coupe - Trim Parts	$142.99
43320	63-67	Vent Regulator - LH - 63-64 Conv - 65-67 Coupe - 3 Ring Shaft - Trim Parts	$142.99
43321	63-67	Vent Regulator - RH - 63-64 Conv - 65-67 Coupe - 3 Ring Shaft - Trim Parts	$142.99
43308	65-67	Vent Regulator - LH Convertible - 2 Ring Shaft - Trim Parts	$142.99
43309	65-67	Vent Regulator - RH Convertible - 2 Ring Shaft - Trim Parts	$142.99
42199	63-64	Vent Regulator - RH Coupe	$186.99
X2605	63-64	Vent Regulator Gear Repair Kit	$40.99

#X2605 1963-67 Vent Regulator Gear Repair Kit

This Repair Kit contains a new C ring and helical gear made from T-6 aircraft aluminum so it won't wear out like the originals do. Get more durability at a fraction of the cost of a GM original replacement.

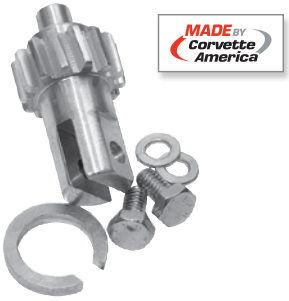

#37129 1963 Coupe Rear & Upper Window Channels

Window Channels

37129	63	Window Channel - Coupe - Rear & Upper - pr - Prebent w/ Clips and Corner Reinforcements	$182.99
25408	63	Window Channel w/o Metal Corner Reinforcements - Coupe - Rear & Upper - pr - Prebent w/ Clips	$149.99
37130	63	Window Channel Metal Corner Reinforcements - Coupe - Rear - pr	$28.99
37131	64-67	Window Channel - Coupe - Rear & Upper - Correct Square Bead - Prebent w/ Clips - pr	$128.99
K1384	63-67	Window Channel Screws - Coupe - Rear Lwr - pr	$1.99
37140	64-67	Window Channel Corner Reinforc. - Coupe SD	$75.99

#1662 Window Seals

#29942 Front Window Runs - Convertible w/ Mounting Kit

Convertible Door Components

33019	63-65 Door Access Plate Front - LH	$21.99
33020	63-65 Door Access Plate Front - RH	$21.99
33021	63-65 Door Access Plate Rear - LH	$23.99
33022	63-65 Door Access Plate Rear - RH	$23.99
32684	63-67 Door Access Plate Caulk Strip	$7.99
33023	63-65 Door Access Plate Mount Kit	$6.99
26653	63-67 Door Align Block Kit w/ Shims & Screws - Conv.	$45.99
46837	63-67 Door Alignment Wedge w/ Screws	$14.99
37634	64-67 Door Molding - Upper	$162.99
29942	63-67 Front Window Run - Conv. w/ Mounting Kit - pr	$53.99
42190	63 Rear Window Run - LH	$84.99
42191	63 Rear Window Run - RH	$84.99
33013	64-67 Rear Window Run - Convertible - LH	$60.99
33014	64-67 Rear Window Run - Convertible - RH	$61.99
34934	63-67 Rear Wind. Run Liner - 63 All - 64-67 Conv - pr	$13.99
27320	63-67 Rear Window Run Lower Bumper	$1.99
42187	63-67 Rear Window Run Screw & Washer Set	$5.99
37136	63-67 Vent Assembly Lower Studs w/ Nuts - pr	$24.99
37138	63-67 Vent Assembly Mounting Hardware - Conv set	$33.99
37139	63-67 Vent Assembly Upper Studs - Conv - pr	$14.99
33029	63-67 Vent Regulator Mount Screws - Convertible - set	$4.99
X2605	63-67 Vent Regulator Gear Repair Kit	$40.99
37137	63-67 Vent Window to Regulator Screws - pr	$3.99
25400	63-67 Vent Window Frame T-Posts - Convertible - pr	$40.99
25423	63-67 Vent Window Frame T-Post - Conv. - LH	$19.99
25424	63-67 Vent Window Frame T-Post - Conv. - RH	$19.99
25403	63-67 Vent Window Hinge Pivot, Convertible - LH	$34.99
25404	63-67 Vent Window Hinge Pivot, Convertible - RH	$34.99
42192	63-67 Vent Window Trim - LH Inner - SS	$56.99
42193	63-67 Vent Window Trim - RH Inner - SS	$56.99
42194	63-67 Vent Window Trim - LH Outer - SS	$56.99
42195	63-67 Vent Window Trim - RH Outer - SS	$56.99
42186	63-67 Window Regulator Gear - Non-Power Window	$37.99
35442	63-67 Window Regulator Set - Except PW	$203.99
33036	63-67 Window Regulator Roller Track - Lower Short	$19.99
33037	63-67 Window Regulator Roller Track - Upper Long	$23.99
33035	63-67 Window Regulator Roller Track Fastener Set	$3.99
33033	63-67 Window Regulator & Track Roller / Rivet Set	$19.99
1662	63-67 Window Seals - Outer - Convertible - USA - pr	$24.99
52208	63-67 Window Seals - Outer - Convertible - Import - pr.	$14.99
42200	65-67 Window Seal Rivet Set	$2.99
K1359	63-67 Window Seal Screw Set	$2.99
1088	63-67 Window Stop - Convertible - Upper Vent - 2 req'd	$6.99
33010	63-67 Window Stop Screws - Convertible - Upper - pr	$1.99
33025	63-67 Window Stop Bumper - Conv. - Front Upper	$1.99
33027	63-67 Window Stop Bumper - Convertible Rear Upper	$3.99
33026	63-67 Window Stop Bumper Bracket - Front Upper	$10.99
33028	63-67 Window Stop Bumper Bracket - Rear Upper	$10.99
42189	63-67 Window Stop Bracket Screws - RR Upper Conv.	$2.99

#25400 1963-67 Vent Window Frame T-Posts - Conv.

#25403 1963-67 Vent Window Hinge Pivot - Conv.

#33014 1964-67 Rear Window Run - Conv. RH

#33020 1963-65 Door Access Plate - Front RH

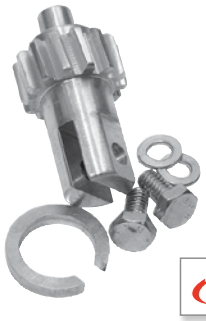

#X2605 1963-67 Vent Regulator Gear Repair Kit

#36517 Power Window Motor Gear - Inside Motor

Power Window Motors

29944	63-67 Power Window Conduits - pr	$96.99
34683	63-67 Power Window Conduit Screw & Nut Set	$1.99
29802	63-67 Power Window Motor - LH	$89.99
29803	63-67 Power Window Motor - RH	$89.99
36517	63-67 Power Window Motor Gear - Inside Motor	$37.99
46792	63-67 Power Window Motor Mount Plate	$9.99
49534	63-67 Power Window Motor Plate Bushing	$8.99
42188	63-67 Power Window Motor Plugs - pr	$5.99
K1436	63-67 Power Window Motor Screws - 6 pc	$4.99
29943	63-67 Power Window Regulator Gear	$36.99

800-458-3475
CorvetteAmerica.com

WARNING: Cancer and Reproductive Harm — www.P65Warnings.ca.gov

1963-67 DOOR HARDWARE

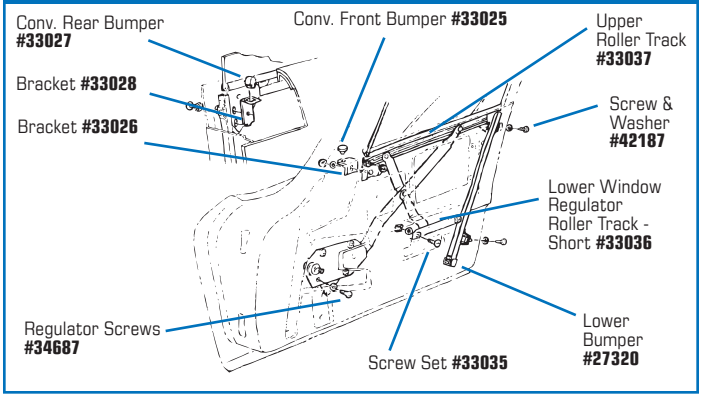

1963-67 CONVERTIBLE DOOR

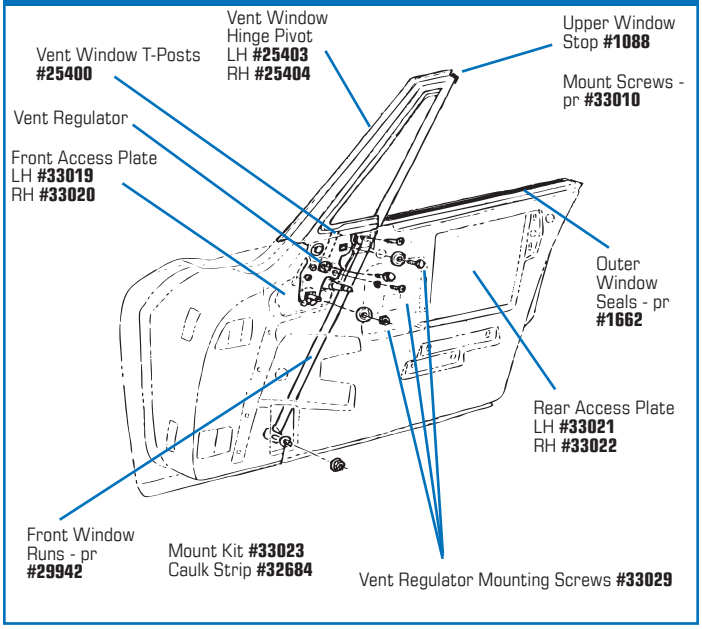

1963-67 DOOR STRIKER

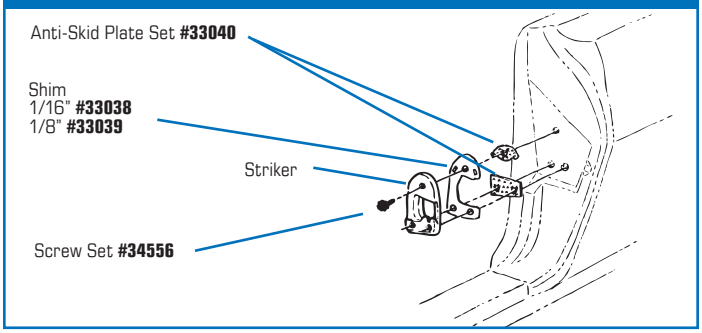

Door Striker

33040	63-67 Door Striker Anti-Skid Plate Set	$32.99
34556	63-67 Door Striker Screw Set - 6 pc set	$7.99
33038	63-67 Door Striker Shim - 1/16"	$9.99
33039	63-67 Door Striker Shim - 1/8"	$10.99

Discounts & Coupons Emailed!

Enter your email address on CorvetteAmerica.com

Door Glass

22218	63-67 Door Glass - Convertible - Tinted - LH	$203.99
22219	63-67 Door Glass - Convertible - Tinted - RH	$203.99
22220	63-67 Door Glass - Coupe - Clear - LH	$212.99
22221	63-67 Door Glass - Coupe - Clear - RH	$212.99
22222	63-67 Door Glass - Coupe - Tinted - LH	$203.99
22223	63-67 Door Glass - Coupe - Tinted - RH	$203.99
34935	63-67 Door Glass Mntng Strips in Bottom Channel - pr	$11.99
22224	63-67 Vent Glass - Convertible - Clear - LH	$186.99
22225	63-67 Vent Glass - Convertible - Clear - RH	$186.99
22226	63-67 Vent Glass - Convertible - Tinted - LH	$186.99
22227	63-67 Vent Glass - Convertible - Tinted - RH	$203.99
22228	63-67 Vent Glass - Coupe - Clear - LH	$186.99
22229	63-67 Vent Glass - Coupe - Clear - RH	$186.99
22230	63-67 Vent Glass - Coupe - Tinted - LH	$186.99
22231	63-67 Vent Glass - Coupe - Tinted - RH	$186.99
34936	63-67 Vent Glass Mounting Strips in Frame - pr	$8.99
46831	63-65 Window Sticker	$4.99

In-Stock & Ready for Shipping!

Our inventory has thousands of products for every Corvette generation. Most orders are processed & shipped the same day! Our Sales Team will help you find the right parts for your Corvette.

WARNING: Cancer and Reproductive Harm — www.P65Warnings.ca.gov

#1103 1963-65 Corvette Stingray Rear Emblem

#1098 1966-67 Stingray Emblem

#1777 1966-67 Glove Box Door Emblem

#40631 1966 Crossflags Nose Emblem

#40630 1965 Nose Emblem

#28619 1965 Front Fender Emblems - Fuel Injection - pair

EMBLEMS

1098	66-67	Corvette Stingray Emblem - 66F, 66-67R	$213.99
42839	63	Front Fender Crossflags - 63E - Import - pr	$50.99
26606	63	Fr. Fender Crossflags - 63E - Trim Parts - pr	$64.99
26615	63-66	Front Fender Crossflags - 63L - pr	$71.99
26612	65	Front Fender Emblems - 396 Turbo Jet - pr	$90.99
43583	65	Front Fender Emblems - 396 - GM Replace. - pr	$38.99
28619	65	Front Fender Emblems - Fuel Injection - pr	$65.99
1105	66	Front Fender Emblems - 427 Turbo Jet - pr	$80.99
33050	63-64	Fuel Injection Side Front Fender Emblem	$82.99
33051	63-65	Fuel Injection Plenum Cover Flag	$51.99
1776	64-65	Glove Box Door Emblem	$40.99
1777	66-67	Glove Box Door Emblem	$40.99
1589	63-64	Nose Emblem - Crossflags	$45.99
51340	65	Nose Emblem - Crossflags - Import	$42.99
40630	65	Nose Emblem - Crossflags - Trim Parts	$50.99
51341	66	Nose Emblem - Crossflags - Import	$42.99
40631	66	Nose Emblem - Crossflags - Trim Parts	$50.99
43510	67	Nose Emblem - Crossflags - Trim Parts	$45.99
43607	67	Nose Emblem - Correct - Orange Flags	$54.99
1103	63-65	Rear Emblem - Corvette Stingray	$45.99
26989	63-64	Speed Nuts - Winged - 25 pc	$34.99
26990	63-64	Speed Nut Fastening Tool - Winged	$33.99

#1589 1963-64 Nose Emblem

#43510 1967 Nose Emblem

#26606 1963 Front Fender Crossflags

#26615 1963-66 Front Fender Crossflags - 63L

#33050 1963-64 Side Front Fender Emblem

#1105 1966 Front Fender Emblems - 427 Turbo Jet

#26612 1965 396 Front Fender Reproduction Emblem

#33051 1963-65 Fuel Injection Plenum Cover Flag

800-458-3475
CorvetteAmerica.com

WARNING: Cancer and Reproductive Harm — www.P65Warnings.ca.gov

#42931 1963 (Early)
Gas Lid Door Assembly

#1584 1963
Gas Lid Door Emblem

#1580 1964
Gas Lid Door Assembly

#1581 1965
Gas Lid Door Assembly

#42259 1966
Gas Lid Door Assembly

#1582 1967 Gas Lid Door
Assembly - Primered

Gas Lid Doors

42931	63	Gas Lid Door - Early w/ Roller Style Latch	$193.99
1579	63	Gas Lid Door - Late w/ Slide Style Latch	$106.99
1580	64	Gas Lid Door Assembly	$106.99
1581	65	Gas Lid Door Assembly	$106.99
42259	66	Gas Lid Door Assembly - White Upper - LH	$106.99
1100	66	Gas Lid Door Assembly - Black Upper - LH	$106.99
1582	67	Gas Lid Door Assembly - Primered	$152.99
26691	63	Gas Lid Door Bezel - 63E - All	$33.99
1391	63-67	Gas Lid Door Bezel - 63L - Coupe	$31.99
34717	63-67	Gas Lid Door Bezel - 63L - Convertible	$31.99
K1206	63-67	Gas Lid Door & Bezel Screws - 63L - 4 pc	$1.99
34719	63-67	Gas Lid Door & Bezel J-Nuts - 4 pc	$1.99
34715	63E	Gas Lid Door Roller	$4.99
34716	63E	Gas Lid Door Roller & Spring	$17.99

#1585

#1586

Gas Lid Door Emblems

1583	63	Gas Lid Door Emblem - 63 E - 1st Design w/ Wheel Latch Assembly	$46.99
1584	63	Gas Lid Door Emblem - 63 L - 2nd Design w/ Slide Latch Assembly	$46.99
1585	64	Gas Lid Door Emblem	$46.99
1586	65	Gas Lid Door Emblem	$46.99
42202	66	Gas Lid Door Emblem - White Upper - LH	$46.99
1756	66	Gas Lid Door Emblem - Black Upper - LH	$46.99
1587	67	Gas Lid Door Emblem - Primered	$70.99

#X2075 427 Hood Number 6-pc Set w/ Speednuts

1967 Hood Numbers

1190	67	Hood Number "4" - 2 req'd	$5.99
1191	67	Hood Number "2" - 2 req'd	$5.99
1192	67	Hood Number "7" - 2 req'd	$5.99
X2075	67	Hood Number Set - 427 - 6 pc w/ Speednuts	$30.99
K1029	67	Hood Number Speednuts - 12 pc	$2.99

Emblem Speed Nut Kits

K1011	63	Emblem Speed Nut Kit	$9.99
K1012	64	Emblem Speed Nut Kit	$8.99
K1013	65	Emblem Speed Nut Kit	$8.99
K1014	66	Emblem Speed Nut Kit	$9.99
K1015	67	Emblem Speed Nut Kit	$9.99

Numeral Emblems

Each number has an adhesive backing and can be placed anywhere you want to show engine size, horsepower, options, whatever!

43345	63-67	Emblem - Number 0	$18.99
43346	63-67	Emblem - Number 2	$18.99
43347	63-67	Emblem - Number 3	$18.99
43348	63-67	Emblem - Number 4	$18.99
43349	63-67	Emblem - Number 5	$18.99
43350	63-67	Emblem - Number 6	$18.99
43351	63-67	Emblem - Number 7	$18.99
43353	63-67	Emblem - Number 9	$18.99

ALTERNATOR

51462	63-67	Alternator - 61 Amp - Remanufactured	$121.99
37165	63-67	Alternator - w/o AC - 42 Amp - Remanufactured - Replacement	$81.99
31004	63	Alternator Adjuster Brace - LH w/ AC	$33.99
37159	63	Alternator Adjuster Brace - RH w/o AC	$39.99
34950	64-65	Alternator Adjuster Brace - LH - 327 / 250 hp, 327 / 300 hp w/ AC	$37.99
31003	64-65	Alternator Adjuster Brace - RH w/o AC	$28.99
31005	66-67	Alternator Adjuster Brace - LH 327	$28.99
31011	65-67	Alternator Adjuster Brace - 396 / 427	$28.99
37162	63-65	Alt. Adj. Brace to Water Pump Bolt & Lockwasher	$1.99
27772	63-67	Alternator Adjuster Bolt w/ Washer - Top	$2.99
23177	65-67	Alternator Brace	$14.99
30849	65-67	Alternator Brace, 396 / 427 - w/ PS	$16.99
30837	64-67	Alt. Bracket - 327 - 64-65 w/ AC, 66-67 All	$28.99
31209	63-65	Alternator Bracket w/ Sleeve to Exhaust Manifold - RH 327 w/o AC	$40.99
37161	63	Alt. Bracket to Manifold Bolt Kit - LH w/ AC	$4.99
37160	63-65	Alternator Bracket to Manifold Bolts - w/o AC - "WB" - 2 pc set	$1.99
37163	65	Alternator Bracket - 396 w/o PS - Correct	$111.99
30847	65-67	Alternator Bracket - 396 / 427 - w/ PS	$55.99
30843	66-67	Alternator Bracket - 427 w/o PS	$95.99
36534	65-67	Alt. Bracket Bolts - 396 / 427 w/o PS - 2 pc set	$3.09
31015	63-67	Alternator Bracket Sleeve	$4.99
42204	63	Alternator Fan	$32.99
42205	64-67	Alternator Fan	$34.99
30841	63-67	Alternator Long Bolt w/ Nut & Washer "TR"	$3.99
K1374	65-67	Alt. Mount Bolts - 396 / 427 w/o PS - 3 pc	$3.99
36535	65-67	Alternator Mount Bolts - 396 / 427 w/ PS - 3 pc	$2.99
31027	65-67	Alternator / PS Mount Stud - 396 / 427	$3.99
33659	65-67	Alternator / PS Pump Bracket Bolt Kit	$19.99
30852	65-67	Alt. / PS Pump Mounting Bracket - 396 / 427	$67.99
23176	65-67	Alternator Mounting Strap - Lower	$15.99
37164	65-67	Alternator / PS Pump Mount Kit - Brace, Strap, 2 Alt Brackets, PS Pump Bracket & Bolt Kit	$218.99
30839	64-67	Alternator Pivot Bolt Kit - Upper / Lower	$5.99
42206	63-67	Alternator Plug	$12.99
40902	63-67	Alternator Plug Boot - Correct	$10.99
30996	63-67	Alternator Pulley - 63-65 250 & 300 hp w/o AC, 63-64 250 & 300 hp w/ AC, 65 350 hp w/o AC & w/o PS, 66-67 350 hp w/ AC	$43.99
30845	63-65	Alternator Pulley - 63-65 340 & 375 hp w/o AC	$43.99
30830	64-65	Alternator Pulley - 350 & 365 w/ AC	$44.99
30997	66-67	Alternator Pulley	$43.99
30842	65-67	Alternator Pulley 390 & 435 hp w/o AC & w/o PS	$43.99
31000	66	Alternator Pulley w/ Fan - 300 hp w/o AC, 350 hp w/o AC & w/o PS	$81.99
30846	66-67	Alternator Pulley - 390 & 400 hp w/ AC & w/ PS	$43.99
30829	67	Alternator Pulley w/ Fan - 300 hp w/ AC	$81.99
27835	63-67	Alternator Pulley Nut w/ Washer	$5.99
30848	65-67	Alternator Strap, 396 / 427 - w/ PS	$17.99
36531	63-67	Alternator Terminal Nut & Lockwasher	$0.99

#37165 Alternator w/o AC

#37163 1965 BB Alternator Bracket w/o PS

#30845 1963-67 Alternator Pulley

1963-67 327 ALTERNATOR

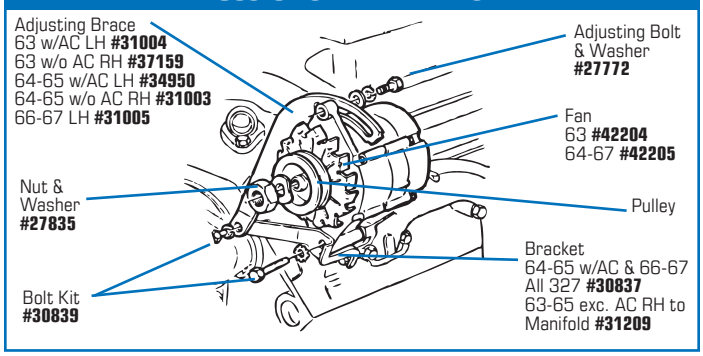

1965-67 BB ALTERNATOR W/O PS

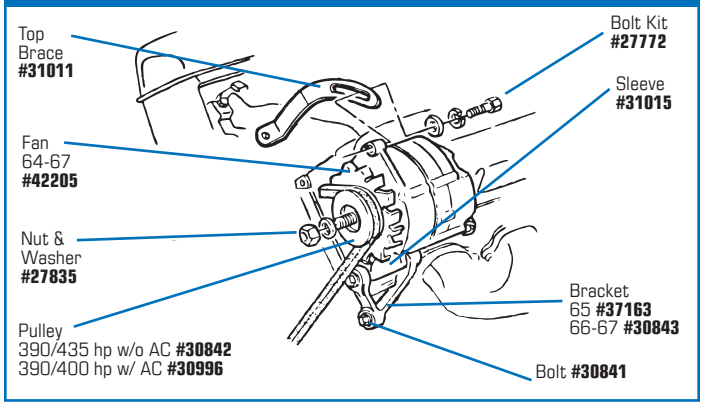

1965-67 BB ALTERNATOR WITH PS

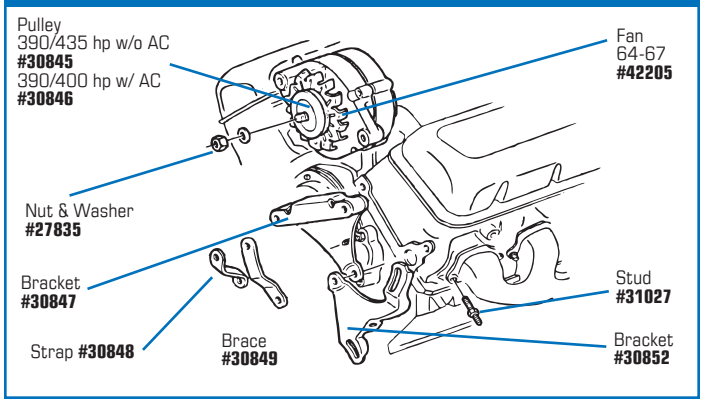

IN STOCK & READY FOR SHIPPING!

In addition to our regular delivery, we offer more options for getting your packages when you need them. Call our Sales Reps for details.

800-458-3475
CorvetteAmerica.com

WARNING: Cancer and Reproductive Harm — www.P65Warnings.ca.gov

Distributor

41138	63-67 Distributor Base Plate	$27.99
22101	63-67 Distributor Base to Point Plate Ground Wire	$9.99
42170	63-67 Distributor Cam Lubricant	$4.99
34932	63-67 Distributor Cam Lubricating Wick and Retainer	$11.99
49476	63-67 Distributor Cap - Delco-Remy Reproduction	$75.99
27448	63-67 Distributor Cap - Exc. TI - Replacement	$14.99
34929	63-65 Distributor Cap - F.I. - Replacement	$40.99
35421	63-67 Distributor Cap & Rotor Kit - Replacement	$40.99
22123	63-67 Distributor Coil Lead Wire	$13.99
27458	63-67 Distributor Drive Gear - Lower	$29.99
41139	63-67 Distributor Drive Gear Pin	$0.99
37120	63-67 Distributor Felt Washer	$1.99
27459	63-67 Distributor Gear Washer - under gear	$4.99
51497	63-67 Distributor-HEI Upgrade - Tach Drive	$102.99
27443	63-67 Distributor Hold Down w/ Bolt	$11.99
51207	63-67 Distributor Hold Down w/ Bolt - Replacement	$7.99
27444	63-67 Distributor Hold Down Clamp w/ Bolt - Wire	$14.99
51337	63-67 Distributor ID Tag - Delco-Remy	$30.99
27455	63-67 Distributor Lead Wire	$7.99
37119	63-67 Distributor Lead Wire Grommet	$3.99
37125	64-67 Distributor Magnet - Transistor Ignition	$274.99
25790	64-67 Distributor Magnet - Trans. Ign. Connector	$7.99
27446	63-67 Distributor Mount Base Gasket	$1.99
50681	63-67 Distributor Points & Condenser Kit	$40.99
51139	63-67 Distributor Points Eliminator Kit	$95.99
37124	64-67 Distributor Pole Piece - TI	$130.99
27450	63-67 Distributor Rotor - Exc. Dual Point	$7.99
X2113	63-67 Distributor Shaft	$61.99
36510	63-67 Distributor Shaft - Transistor Ignition	$73.99
53310	63-67 Distributor Shaft Bushing - Upper	$8.99
53311	63-67 Distributor Shaft Bushing - Lower	$8.99
27456	63-67 Distributor Shaft Bushings - Upper/Lower - set	$16.99
27457	63-67 Distributor Shaft Bushing Installation Tool	$9.99
41137	63-67 Distributor Shaft Sleeve	$1.99
X32672	63-67 Distributor Side Gear - Tach Drive	$30.99
X2557	63-67 Distributor Side Gear Bronze Button	$6.99
X2556	63-67 Distributor Side Gear Coupler	$16.99
32673	63-67 Distributor Side Gear Washer	$1.99
X2601	63-67 Dist. Side Gear Coupler, Washer & Button - set	$40.99
27460	63-67 Distributor Shim Kit - 6 pc	$8.99
29079	63-67 Distributor Small Parts Kit	$13.99
27445	63-65 Distributor Spacer - FI	$41.99
42169	63-67 Distributor Spring Clip	$5.99
34930	63-67 Distributor Spring & Weight Kit	$16.99
35423	63-67 Dist. Tune-Up Kit - Rotor - Standard Pts & Cond	$29.99
35418	63-65 F.I. Distributor Gasket, Seal & Fastener Kit	$56.99
27453	63-67 Ignition Condenser - Exc. Dual Point	$10.99
K1434	63-67 Ignition Condenser Screw	$1.99
27451	63-67 Ignition Point - Exc. Dual Point	$22.99
K1435	63-67 Ignition Point Screws - 2 pc set	$1.99
29700	64-67 Transistor Ignition Amplifier Box Module	$152.99
42182	64-67 Trans Ignition Amp Rear Cover Screws - 6 pc	$4.99
42178	65 Trans Ignition Amp Screw Set	$2.99
42179	64-67 Trans Ignition Amp Screw Set - Exc. 65	$6.99
42174	64-67 Trans Ignition Connector - Double Male on Dist	$8.99
42175	64-67 Trans Ignition Connector - Single Male	$1.99
42176	64-67 Trans Ignition Connector - Single Female	$0.99
42177	64-67 Trans Ign. Connector - Double Female on Harness	$1.99
42180	66-67 Trans Ignition Ground Screw - to Rad Support	$1.99
37128	64-67 Transistor Ignition Module Cover Gasket	$7.99
42183	64-67 Trans Ignition Pickup Coil Washer	$3.99
33569	63-65 Vac. Adv. - 63 All, 64 250/300 hp, 65 396 TI	$24.99
33567	65-67 Vac. Advance - 1965 250/300 hp	$19.99
36511	67 Vac. Advance - Correct - #360 - 67L 390 / 400	$45.99
36512	67 Vacuum Advance - Correct - #373 - L88	$67.99
K1378	63-67 Vacuum Advance Mount Screw & Washer	$1.99

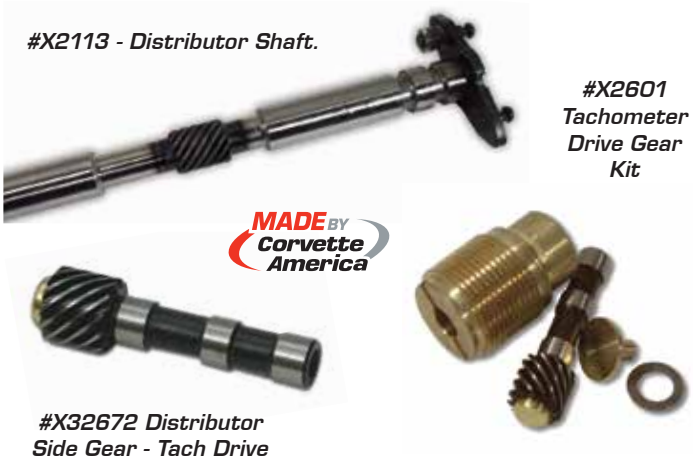

#X2113 - Distributor Shaft.

#X2601 Tachometer Drive Gear Kit

#X32672 Distributor Side Gear - Tach Drive

1963-67 DISTRIBUTOR

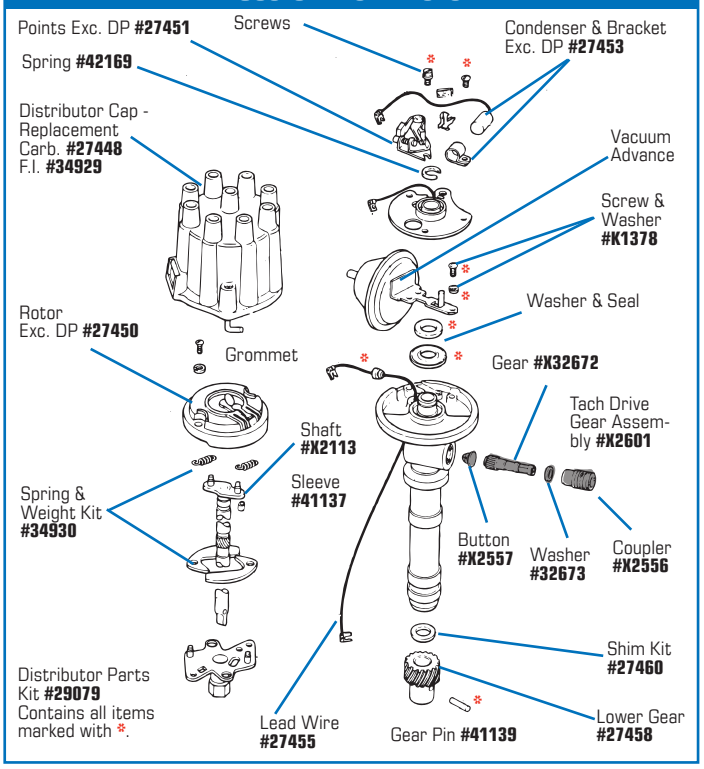

ACCEL Ignition Components

Accel Ignition Coils, Distributor Components, Spark Plugs & Spark Plug Wires are designed to make your Corvette's ignition perform reliably & efficiently. Accel's innovations in ignition wire & distributor technology have earned the trust of auto & performance enthusiasts everywhere. Accel delivers a better spark & more MPG's.

51111	63-67 Distributor Cap & Rotor - Accel	$35.99
51108	63-67 Distributor Rotor - Exc. Dual Point - Accel	$26.99
51107	63-67 Ignition Point - Exc. Dual Point - Accel	$35.99
51109	63-67 Ignition Coil - Accel Super Coil	$112.99
51112	63-67 Ignition Coil - Accel Super Stock - Chrome	$62.99
51113	63-67 Spark Plug Wires - SB Exc. FI - Accel	$64.99
51114	65-67 Spark Plug Wires - BB - Accel	$62.99

WARNING: Cancer and Reproductive Harm — www.P65Warnings.ca.gov

#40874
Rebuilt Distributor Tach Drive

29940 63-67 Distributor - Tach Drive - Exc. TI $473.99
36509 63-67 Distributor - Tach Drive - Hi Perf..... $525.99
40874 63-67 Distributor - Rebuilt Tach Drive - Exc. TI - Core Charge Required $305.99

Breakerless SE Ignition Kit

Convert any GM V8 breaker point distributor to a reliable, solid-state electronic ignition and keep the stock appearance! Features an integrated trigger and power module contained inside the distributor and over-current protection. No additional wires protrude from the distributor. Covered by a three-year manufacturer's warranty.

41508 63-67 Breakerless SE Ignition Kit $171.99

Tach Drive Gear Assemblies

Stainless Steel or Bronze couplings with gear and permanently-lubricated needle bearings. Outlasts originals by years!

1596 63-67 Bronze $81.99
1595 63-67 Stainless Steel $81.99

#30993
1965-67
327 Standard
Ignition Coil
w/ Correct #202

Engine - Electrical

30992 63-64 Coil w/ Correct #087 - 63L; 64 250 / 300 hp $91.99
30993 65-67 Coil w/ Correct #202 - 327 Standard Ignition $101.99
30994 66 Coil w/ Correct #232 - 390 hp Standard Ignition $91.99
30995 67 Coil w/ Correct #264 - 390, 400 hp Standard Ignition. $91.99
33058 63-67 Coil - Replacement..... $75.99
37146 64 Coil - Transistor Ignition - #176 ..... $203.99
37147 65 Coil - Transistor Ignition - 350-375 hp - #203 .. $203.99
37148 65-67 Coil - Transistor Ignition - 350-375 hp - #207 ... $147.99
37149 65-66 Coil - Transistor Ignition - 396 / 427 - #210 ..... $147.99
37150 66 Coil - Transistor Ignition - 427 - #231 ..... $147.99
37151 66 Coil - Transistor Ignition - 427 - #261 ..... $147.99
37152 67 Coil - Transistor Ignition - 427 - #263 ..... $147.99
37144 63-67 Coil / Ballast Resistor - 63-64 250 / 300 hp, 65-67 All Exc TI $30.99
37177 63-67 Coil / Ballast Resistor - 63-64 hp & FI & 65-67 w/o Trans. Ign $30.99
35457 63-67 Coil / Ballast Resistor to Firewall Screw $1.99
1209 63-67 Coil Bracket - 327 ..... $21.99
35080 65-67 Coil Bracket 396 / 427 Exc. 3x2 ..... $18.99
35081 67 Coil Bracket - 427 3x2 ..... $22.99
35082 67 Coil Bracket Bolts - pr..... $5.99
42203 62-74 Coil Terminal Nut, Washer & Retainer Kit $10.99
34956 63-67 Firewall Wiring J-Clip Set - w/o AC..... $17.99
34957 63-67 Firewall Wiring J-Clip Set - w/ AC $28.99
34958 63-67 Fuse Block Gasket $3.99
37153 63-67 Ground Strap - Body to Frame at Door Sill..... $7.99
37155 63-67 Ground Strap - Center Exh, Hanger - 2 req'd $4.99
37154 63-67 Ground Strap - Engine Mount $7.99
27542 63-64 Ignition Coil - Carbureted #091 ..... $101.99
33059 63-67 Ignition Coil Cap. w/ Bracket - 327 - Orange Wire . $21.99
37156 63-67 Ignition Coil Capacitor Mount Screw..... $1.99
33057 63-67 Radio Ground Strap Bolt & Washer Kit..... $8.99
42235 63-67 Voltage Regulator - Delco..... $112.99
43816 63-67 Voltage Regulator - Replacement..... $30.99
42237 63-67 Voltage Regulator Ground Screw $0.99
37157 63 Voltage Regulator Mount Screws - 6 pc $1.99
37158 64-67 Voltage Regulator Mount Screws & Nuts..... $7.99
42236 63-67 Voltage Regulator Plug & Terminal Set..... $4.99

Spark Plugs

ACDelco

50648 63-65 Spark Plug - 283 / 327 / 350 - Replaces AC44 .... $2.99
50647 63-67 Spark Plug - Delco R45S $2.99
50671 65-67 Spark Plug - Delco R43XLS - 396/427..... $2.99
51985 63-67 Spark Plug - #43 w/ Green Strip - 8 pc $60.99
52065 63-67 Spark Plug - #43S w/ Green Strip - 8 pc $60.99
51986 63-67 Spark Plug - #44 w/ Green Strip - 8 pc $60.99
52066 63-67 Spark Plug - #44S w/ Green Strip - 8 pc $60.99
51987 63-67 Spark Plug - #45 w/ Green Strip - 8 pc $60.99
52067 63-67 Spark Plug - #45S w/ Green Strip - 8 pc $60.99

Reproduction Spark Plug Wire Sets

Electric Limited Inc.

Manufactured using actual GM blueprints. 100% correct boots, terminals, cables and factory script on the wires. Wire sets designated as Early were used on cars produced prior to March of their model year. Call for specific VIN# applications.

22010 63 Spark Plug Wires Set - 63E..... $77.99
22011 63 Spark Plug Wires Set - 63L..... $77.99
22012 63 Spark Plug Wires FI Set - 63E $92.99
22013 63 Spark Plug Wires FI Set - 63L $92.99
22014 64 Spark Plug Wires Set - 64E $77.99
22015 64 Spark Plug Wires Set - 64L..... $77.99

Economy Spark Plug Wire Sets

Cosmetically closer to the originals than GM replacement sets, & better fitting too! Genuine Packard wiring & stock-like boots. No date-coding.

23090 63-67 Spark Plug Wire Set - SB - Exc. FI..... $41.99
23094 65-66 Spark Plug Wire Set - BB w/ Radio..... $154.99
23091 65-66 Spark Plug Wire Set - BB w/o Radio $41.99
23095 67 Spark Plug Wire Set - BB w/ Radio..... $154.99

800-458-3475
CorvetteAmerica.com
WARNING: Cancer and Reproductive Harm — www.P65Warnings.ca.gov

22016	64	Spark Plug Wires FI Set - 64E	$92.99
22017	64	Spark Plug Wires FI Set - 64L	$92.99
22018	65	Spark Plug Wires 327 Set - 65E	$77.99
22019	65	Spark Plug Wires 327 Set - 65L	$77.99
22020	65	Spark Plug Wires 327 FI Set - 65E	$92.99
22021	65	Spark Plug Wires 327 FI Set - 65L	$92.99
22050	65	Spark Plug Wires 396 w/ Radio Set - 65E	$169.99
22051	65	Spark Plug Wires 396 w/ Radio Set - 65L	$169.99
22079	65	Spark Plug Wires 396 w/o Radio Set - 65E	$77.99
22080	65	Spark Plug Wires 396 w/o Radio Set - 65L	$77.99
22022	66	Spark Plug Wires 327 Set - 66E	$77.99
22023	66	Spark Plug Wires 327 Set - 66L	$77.99
22052	66	Spark Plug Wires 427 w/ Radio Set - 66E	$169.99
22053	66	Spark Plug Wires 427 w/ Radio Set - 66L	$169.99
22081	66	Spark Plug Wires 427 w/o Radio Set - 66E	$77.99
22082	66	Spark Plug Wires 427 w/o Radio Set - 66L	$77.99
22024	67	Spark Plug Wires 327 Set - 67E	$77.99
22025	67	Spark Plug Wires 327 Set - 67L	$77.99
22054	67	Spark Plug Wires 427 w/ Radio Set - 67E	$169.99
22055	67	Spark Plug Wires 427 w/ Radio Set - 67L	$169.99
22083	67	Spark Plug Wires 427 w/o Radio Set - 67E	$77.99
22084	67	Spark Plug Wires 427 w/o Radio Set - 67L	$77.99

Spark Plug Wire Supports

35075	65-66	Spark Plug Wire Support on Valve Cover - 3 + 1	$4.99
35076	65-67	Spark Plug Wire Support on Valve Cover - 4 Slot - No Stand	$2.99
35077	65-67	Spark Plug Wire Support on Valve Cover - 2 Slot	$2.99
35078	67	Spark Plug Wire Support on Valve Cover - 4 Slot	$2.99

#6215 1963 Ignition Shield Set - 327 - Early '63

Small Block Ignition Shielding Sets

A typical small block ignition shielding set includes:

- 1 Top Shield & 1 Shield Bolt
- 2 Top Shield Brackets - LH & RH
- 2 Vertical Shields - LH & RH
- 1 Spark Plug Wire Support - RR
- 1 Shield Bracket - Lower LR
- 2 Spark Plug Shields - LR & LF
- 1 Spark Plug Shield - RH (63)
- 1 Spark Plug Shield - RR (64-67)
- 1 Spark Plug Shield - RF (64-67)
- 12 Wing Nuts
- 4 Spark Plug Wire Grommets
- 6 Spark Plug Shield Brackets (63)
- 8 Spark Plug Shield Brkts (64-67)

6215	63	Ignition Shield Set - 327 - 63E	$531.99
6216	63	Ignition Shield Set - 327 - 63L	$539.99
6217	64	Ignition Shield Set - 327	$571.99
6218	65	Ignition Shield Set - 327	$571.99
6219	66-67	Ignition Shield Set - 327	$601.99

1963-67 IGNITION SHIELDING

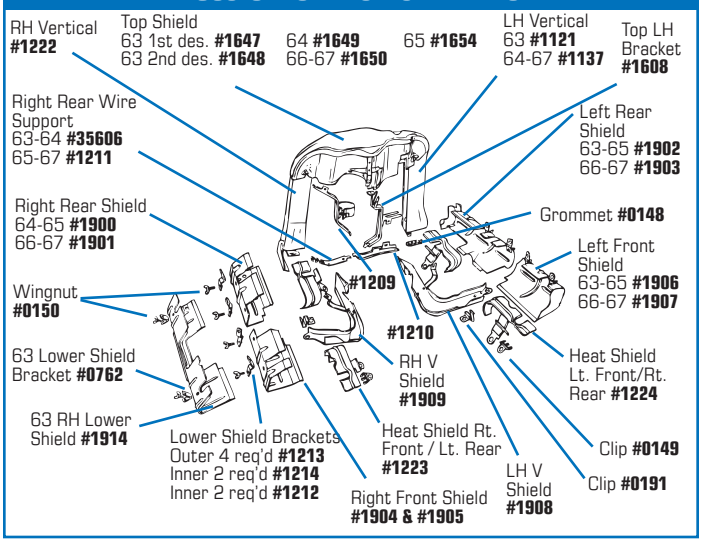

Small Block Ignition Shielding Components

K1253	63-67	Coil Bracket Screw & Washer	$2.99
1224	63-67	Heat Shield - LF / RR - 2 required	$9.99
1223	63-67	Heat Shield - LR / RF - 2 required	$9.99
X2582	63-67	Heat Shield Kit - 4 pc- Does Both Sides - Repro	$30.99
37401	63-67	Ignition Shield Bracket / Heat Shield Bolt	$5.09
1906	63-65	Spark Plug Shield - LH Front	$54.99
1907	66-67	Spark Plug Shield - LH Front	$44.99
1902	63-65	Spark Plug Shield - LH Rear	$54.99
1903	66-67	Spark Plug Shield - LH Rear	$54.99
1914	63	Spark Plug Shield - RH	$63.99
1904	64-65	Spark Plug Shield - RH Front	$54.99
1905	66-67	Spark Plug Shield - RH Front	$54.99
1900	64-65	Spark Plug Shield - RH Rear	$54.99
1901	66-67	Spark Plug Shield - RH Rear	$54.99
1212	63-67	Spark Plug Shield Bracket - Inner - 2 req'd - LH	$3.99
1214	63-67	Spark Plug Shield Bracket - Inner - 2 req'd - RH	$5.99
1213	63-67	Spark Plug Shield Bracket - Outer - required	$11.99
0762	63	Spark Plug Shield Bracket	$3.99
36737	64-67	Spark Plug Shield Brackets - 8 pc	$32.99
37267	63-67	Spark Plug Shield Bracket Bolts - 6 pc	$4.99
37264	63	Spark Plug Shield Set w/ Brackets	$165.99
37265	64-65	Spark Plug Shield Set w/ Brackets & Wingnuts	$211.99
37266	66-67	Spark Plug Shield Set w/ Brackets & Wingnuts	$222.99
0149	63-67	Spark Plug Wire Clip - Block	$4.99
0191	63-67	Spark Plug Wire Clip - Oil Pan	$3.99
0148	63-67	Spark Plug Wire Grommet - Oval	$2.99
1210	63-67	Spark Plug Wire Support Bracket - Lower LR	$12.99
35606	63-64	Spark Plug Wire Support Bracket - Lower RR	$17.99
1211	65-67	Spark Plug Wire Support Bracket - Lower RR	$15.99
1647	63	Top Shield - 1st Design	$230.99
1648	63	Top Shield - 2nd Design	$230.99
1649	64-65	Top Shield - 65E	$234.99
1654	65	Top Shield - 65L	$230.99
1650	66-67	Top Shield	$230.99
0276	63-67	Top Shield Bolt	$1.99
1608	63-66	Top Shield Bracket - LH - 66E	$28.99
42319	66-67	Top Shield Bracket - LH - 66L	$21.99
1209	63-67	Top Shield Bracket - RH	$21.99
42322	63	Top Shield Front Clip - 63E w/ Rivets	$10.99
42324	63-64	Top Shield Front Clip - 63L w/ Rivets	$10.99
42325	65	Top Shield Front Clip - w/ Rivets Small Block	$10.99
42326	66-67	Top Shield Front Clip - w/ Rivets Small Block	$10.99

Continued on the next page.

Continued from the previous page.

42327	63	Top Shield Plastic Liner - 327	$2.99
42328	64-67	Top Shield Plastic Liner - 327	$2.99
42329	63-64	Top Shield Liner Rivets - Metal - 3 pc	$1.99
42330	65-67	Top Shield Liner Rivets - Plastic - 2 pc	$3.99
42320	63-67	Top Shield Rear Clip - Carbureted	$17.99
42321	63-65	Top Shield Rear Clip - FI	$21.99
1908	63-67	V-Shield - LH	$77.99
1909	63-67	V-Shield - RH	$77.99
1121	63	Vertical Shield - LH	$48.99
1137	64-67	Vertical Shield - LH	$48.99
1222	63-67	Vertical Shield - RH	$52.99
0168	63-67	Vertical Shield J-Nut - RH	$0.99
0150	63-67	Wingnut	$1.99

Big Block Ignition Shielding Sets

A typical big block ignition shielding set includes:

- 1 Top Shield
- 1 Top Shield Cover
- 1 Top Shield Bracket - LH
- 1 Top Shield Bracket - RH
- 6 Wing Nuts
- 2 Spark Plug Wire Grommets
- 1 Top Shield Grommet - Rear

6230	65	Ignition Shield Set - 396	$264.99
6231	66	Ignition Shield Set - 427	$261.99
6232	67	Ignition Shield Set - 427 1x4	$261.99
6233	67	Ignition Shield Set - 427 3x2	$264.99

Big Block Ignition Shielding Components

36749	65-67	Coil Mount Bracket Screw - 396 / 427	$1.99
35080	65-67	Coil Support w/ Screw - Exc 3x2	$18.99
35081	67	Coil Support w/ Screw - 427 3x2	$22.99
35082	65-67	Coil Support Mounting Screws - pr	$5.99
37401	63-67	Ignition Shield Bracket / Heat Shield Bolt	$5.09
26690	65-66	Spark Plug Shields - 8 pc	$92.99
35079	65-66	Spark Plug Shield Screws & Washers - 16 pc	$12.99
K1344	65-67	Spark Plug Wire to Bracket Grounding Nuts - 396 / 427 - pr	$1.99
1200	65-67	Spark Plug Wire Grommets - Square - pr	$6.99
1128	65	Top Shield - 396	$91.99
1129	66	Top Shield - 427	$91.99
1130	67	Top Shield - 427 1x4	$91.99
1131	67	Top Shield - 427 3x2	$91.99
1132	65-67	Top Shield Cover	$98.99
1133	65-67	Top Shield Bracket - LH	$19.99
1134	65	Top Shield Bracket - RH - 396	$20.99
1135	66-67	Top Shield Bracket - RH - 427	$20.99
42331	65-66	Top Shield Front Clip w/ Rivets - Big Block	$10.99
42332	67	Top Shield Front Clip w/ Rivets - Big Block - 1x4	$10.99
42333	67	Top Shield Front Clip w/ Rivets - Big Block - 3x2	$16.99
1829	65-67	Top Shield Grommet - Rear	$1.99
42334	65-67	Top Shield Plastic Liner - 396 / 427	$6.99
0150	65-67	Wing Nut	$1.99

Engine - Tune-Up Kits

Kits include Air Cleaner Element (where applicable), Oil Filter, Distributor Cap & Rotor, Spark Plugs & Wires.

49509	63-65	Engine Tune-Up Kit - 250 hp	$125.99
49511	63-65	Engine Tune-Up Kit - 300 / 365 hp	$124.99
49510	66-67	Engine Tune-Up Kit - 300 / 350 w/o PCV Valve	$123.99
49512	66	Engine Tune-Up Kit - 396 / 427	$208.99
49513	67	Engine Tune-Up Kit - 427	$208.99

#37176 1966-67 A.I.R. Pump Pulley

#32930 1963 PC Valve Fitting on Carburetor w/ AC & PB

Engine - Emissions

37179	66-67	A.I.R. Hose Clamps - 10 pc	$20.99
33684	66-67	A.I.R. Pump Bracket - 327 / 350	$79.99
37176	66-67	A.I.R. Pump Pulley	$87.99
32538	63-67	Crankcase Ventilator Can - Mounts Inside Engine	$55.99
32940	65-67	Connect. Hose - Air Clnr. to Valve Cvr. - 396, 427	$4.99
32924	63-64	Crankcase Vent Tube - All 63, 64 FI Early	$19.99
29752	64-65	Crankcase Vent Tube - 250 & 300 hp	$57.99
29753	64-67	Crankcase Vent Tube - 350 & 365 hp	$57.99
42032	64-65	Crankcase Vent Tube - FI - 64 Late	$106.99
29755	66-67	Crankcase Vent Tube - 300 hp	$57.99
29758	65	Crankcase Vent Tube - 396	$30.99
32925	63	Crankcase Vent Tube Hose & Grommet Kit	$12.99
32931	64-67	Crankcase Vent Tube Hose Seal & Bolt Kit - 327	$8.99
40529	63-67	Crankcase Vent Tube Bolt & Seal Kit	$6.99
27411	64-65	Crankcase Vent Tube Attaching Stud - 250, 300	$2.99
32939	65	Crankcase Vent Tube Grommet	$21.99
32926	63	PC Valve on Back of Carburetor	$48.99
42034	63	PCV Valve - FI	$32.99
33054	66-67	PCV Valve - 327	$48.99
32947	67	PCV Valve - RH - 427 3x2	$4.99
32927	63	PC Valve Fitting on Carburetor - No AC or PB	$11.99
32928	63	PC Valve Fitting on Carburetor - w/ PB	$46.99
32929	63	PC Valve Fitting on Carburetor - w/ AC	$46.99
32930	63	PC Valve Fitting on Carburetor - w/ AC & PB	$72.99
42035	63	PCV Fitting - FI - In Plenum	$10.99
42033	64-65	PCV Fitting - Holley 350 & 365 hp	$33.99
32948	67	PCV Grommet in RH Valve Cover	$2.99
34845	64-65	PCV Hose & Clamps - 327	$12.99
34846	66-67	PCV Hose & Clamps - 327	$16.99
33052	64-65	PCV Hose w/ Logo - 250 / 300 hp	$16.99
32946	66-67	PCV Hose - RH Intake to RH VC - 427 / 454	$26.99
32941	65-67	Vent Tube Elbow in Valve Cover - 396, 427	$19.99
32942	66-67	Vent Tube Grommet in Valve Cover - 427	$4.99

1963-67 Engine Tune-Up Kit

800-458-3475
CorvetteAmerica.com

WARNING: Cancer and Reproductive Harm — www.P65Warnings.ca.gov

Power+Plus Intake Manifolds

Add Power and Prolong Engine Life!

The dual-plane, 180° design delivers more power right off idle in all motors and increases power at high RPM for high-performance motors. Power+Plus Manifolds have a square bore carb adaptor plate and gasket for use with Holley or Edelbrock square bore carbs. High-polish or satin finish. Small Block Manifolds include dual distributor hold downs & four corner water outlets.

41760 63-67 Small Block - Polished $274.99
41761 63-67 Small Block - Satin $203.99

Engine - Intake

51335 63-65 Intake Block Off Plate Kit w/ FI $10.99
32499 63-67 Intake Manifold Bolt Set - 12 pc $16.99
33093 64 Intake Man. Bolt Set - 327 TR Silver 365/375 hp $13.99
K1470 65-67 Intake Man. Bolt Set - "M" Black - 250 / 300 hp.. $21.99
33096 64 Intake Manifold Bolt Set - "TR" Black-250/300 hp $17.99
K1469 65 Intake Manifold Bolt Set - 396 "A" $25.99
33098 65-67 Intake Manifold Bolt Set - 396/427 "M" Zinc Silver $23.99
32509 63-67 Intake Manifold Washer Set - Aluminum - 12 pc $3.99
37173 64 Intake Vacuum Fitting - w/ AC - 64E $37.99
37174 64 Intake Vacuum Fitting - Auto - 64L $36.99
37175 64 Intake Vacuum Fitting - PB & AC - 4 Spd or Auto. $70.99
33071 64-67 Intake Vacuum Fitting - Power Brake $18.99
33072 64-67 Intake Vacuum Fitting - AC or Auto $19.99
33073 64-67 Intake Vacuum Fitting - PB & AC or PB & Auto $22.99
33074 64-67 Intake Vacuum Fitting - AC & Auto $33.99
33075 64-67 Intake Vacuum Fitting - AC & Auto & PB $23.99
33076 67 Intake Vacuum Fitting - 427 3x2 w/ AC & Auto ... $23.99
33077 67 Intake Vac. Fitting - 427 3x2 w/ AC & PB & Auto $24.99
33078 67 Intake Vacuum Fitting - 427 3x2 w/ PB & AC or w/ PB & Auto $24.99
42208 64-65 Vacuum Advance Fitting - w/ FI $33.99
34942 63-65 Vacuum Fitting - FI w/ Power Brake $30.99
34943 63-65 Vacuum Plug - FI w/o Power Brake $11.99
33070 64-67 Vacuum Port on Intake Steel Plug $4.99

Fender Gripper

Protect your paint when you're under the hood. Made from a non-slip material. You can rest assured that your tools will not slip off the fender gripper. Washable and impervious to motor oil, so clean up is a snap!

46493 63-67 Fender Gripper $30.99

#34963 1963-67 Timing Chain Cover w/ Correct Tab

#33107 1967 Timing Chain & Gears Set

#32539 1963-67 Timing Chain & Gears - Double Roller Set

#34962 1963-67 Timing Chain Cover w/ Correct Tab

Engine - Timing

35464 63-67 Dowel Pins for Timing Chain Cover - pr $2.99
42240 65-66 Timing Chain - 396 / 427 ..... $27.99
42239 67 Timing Chain - 327 ..... $27.99
42241 67 Timing Chain - 427 ..... $27.99
32546 63-66 Timing Chain & Gears Set - 327 ..... $45.99
33107 67 Timing Chain & Gears Set - 327 ..... $30.99
32539 63-67 Timing Chain & Gears - Double Roller Set $35.99
36543 65-67 Timing Chain & Gears Set - 396 / 427 ..... $43.99
37168 63-67 Timing Chain Cover - 327 - Chrome $21.99
34962 63-67 Timing Chain Cover w/ Correct Tab - 327 / 250 & 300 hp $79.99
34963 63-67 Timing Chain Cover w/ Correct Tab - 327 hp $79.99
33090 65-67 Timing Chain Cover - 396 / 427 - Replacement... $40.99
37171 65-66 Timing Chain Cover - 425 hp - Correct $75.99
37172 66 Timing Chain Cover - 390 hp - Correct $81.99
36540 67 Timing Chain Cover - 427/390 & 400 hp Correct $75.99
36541 67 Timing Chain Cover - 427/430 & 435 hp Correct $80.99
51096 63-67 Timing Chain Cover Kit - 327 Chrome $26.99
51102 65-67 Timing Chain Cover Kit - BB Chrome $37.99
32535 63-67 Timing Chain Cover Bolt Set - 327 - 10 pc $8.99
33091 65-67 Timing Chain Cover Bolt Set - 396 / 427 10 pc..... $7.99
33089 63-67 Timing Chain Cover Gasket Set - 327 ..... $17.99
33092 65-67 Timing Chain Cover Gasket Set - 396 / 427 ..... $17.99
32536 63-65 Timing Chain Cover Tab - 340 hp $15.99
33088 65-67 Timing Chain Cover Tab (65-67 BB & 66-67 350 hp) $18.99
35463 63-67 Timing Chain Cover Tab w/ 8" Balancer $7.99
42242 63-66 Timing Chain Gear - On Cam - 327 ..... $28.99
42243 67 Timing Chain Gear - On Cam - 327 ..... $28.99
42244 65-66 Timing Chain Gear - On Cam - 396/427 ..... $28.99
42245 67 Timing Chain Gear - On Cam - 427 ..... $28.99
42247 67 Timing Chain Gear - On Crank - 327 ..... $28.99
42249 67 Timing Chain Gear - On Crank - 427 ..... $28.99
51336 63-67 Timing Chain Tab - SB - Exc w/ 8" Balancer $18.99

#1893 1963 Black Oil Filler Tube - 250, 300HP

#1897 1964-65 Chrome Oil Filler Tube w/SHP, FI

#1899 1966-67 Chrome Oil Filler Tube

#2335 1963-64 Chrome Dipstick Tube

#27525 1963-67 Oil Filter Cannister w/ Decal PF-141

ENGINE - OIL SYSTEM

2334	63	Dipstick - Black	$24.99
2338	63-64	Dipstick - Black	$22.99
2337	63-64	Dipstick - Chrome - HP only	$24.99
2341	64	Dipstick - Unplated	$35.99
28364	65-67	Dipstick - 396, 427 - Correct	$24.99
2344	65-67	Dipstick - Black - 327 - 65 Original	$30.99
34960	65-67	Dipstick Repair Kit - Boot & Tip - 327	$15.99
34961	65-67	Dipstick Repair Kit - Boot & Tip - 396 / 427	$15.99
2335	63-64	Dipstick Tube - Chrome	$11.99
2336	65-67	Dipstick Tube - 327 - Chrome	$11.99
51202	65-67	Dipstick Tube - 327 & 350 - Natural	$8.99
28365	65-67	Dipstick Tube - 396, 427 - Correct	$21.99
2367	65-67	Dipstick Guide Tube - All, except BB	$12.99
27531	63-67	Lower Dipstick Tube in Motor - 327	$20.99
27538	63-67	Oil Drain Plug	$4.39
27539	63-67	Oil Drain Plug Gasket	$8.99
27537	63-67	Oil Drain Plug w/ Gasket, Magnetic	$5.99
28362	65-67	Oil Fill Cap - 396 / 427 Twist-in - Black - Correct	$37.99
51152	65-67	Oil Filler Cap - Replacement	$3.99
28360	66-67	Oil Fill Tube Cap - 327 / 300 hp - Black - Correct	$11.99
28359	63-65	Oil Filler Tube Cap - Chrome	$12.99
28361	66-67	Oil Filler Tube Cap - 327 / 350 hp - Chrome	$10.99
34941	63-65	Oil Filler Tube Cap Gasket - Cork w/ Hole	$1.99
1893	63	Oil Filler Tube - 250, 300 HP Black	$24.99
1894	63	Oil Filler Tube - 340 HP Chrome	$30.99
1895	63	Oil Filler Tube - FI Chrome	$30.99
1896	64-65	Oil Filler Tube - Black	$22.99
1897	64-65	Oil Filler Tube - w/ SHP, FI Chrome	$31.99
1898	66-67	Oil Filler Tube - 327 / 300 Black	$24.99
1899	66-67	Oil Filler Tube - w/ SHP Chrome	$33.99
27529	63-67	Oil Filter - PF-25 - Spin On - Replacement	$5.99
27527	63-67	Oil Filter Bypass Valve w/ Gasket	$37.99
K1259	63-67	Oil Filter Bypass Valve Bolts - pr	$1.99
35454	63-67	Oil Filter Bypass Valve Gasket	$3.99
27525	63-67	Oil Filter Cannister with Decal - PF-141	$104.99
34959	63-67	Oil Filter Cannister Gasket	$4.99
27526	63-67	Oil Filter Cartridge - PF-141	$8.99
27534	63-67	Oil Line Fitting in Block - Brass	$2.99
28377	63-67	Oil Line Kit - Copper 327	$12.99
27540	65-67	Oil Line Kit - Steel 396 / 427	$17.99
27541	63-65	Oil Line Kit - FI Distributor - use w/ #28377	$35.99
33616	63-67	Oil Pan - 327 - Replacement - Painted	$89.99
28371	65-67	Oil Pan - 396 / 427	$266.99
45015	63-67	Oil Pan - 4 Quart - SB - Orange - Correct	$305.99
51334	63-65	Oil Pan Baffle - All - w/ Solid Lifters	$36.99
28373	65-67	Oil Pan Baffle - 396 / 427	$21.99
28374	65-67	Oil Pan Baffle Stud - 396 / 427	$24.99
27535	63-67	Oil Pan Bolt Set - 327 - 18 pc	$12.99
28375	65-67	Oil Pan Bolt Set - 396 / 427 - "L" - 24 pc	$13.99
27536	63-67	Oil Pan Gasket Set - 327 - not for Replace. Pan	$17.99
41734	63-67	Oil Pan Gasket Set - 327 - for Replace. Pan	$18.99
28376	65-67	Oil Pan Gasket Set - 396 / 427	$17.99
36524	65-67	Oil Pan Reinforcement Set - 396 / 427	$27.99
33624	63-67	Oil Pickup w/ Screen	$22.99
28369	63-67	Oil Pickup w/ Screen - 327	$24.99
36525	65-67	Oil Pressure Line Adapter Fitting - 425-435 hp	$4.99
37143	67	Oil Pressure Line Elbow - 427 Auto	$7.99
51333	65-67	Oil Pressure Line Fitting - 1/2" x 1/8"	$9.99
51332	66-67	Oil Pressure Line Fitting - 3/8" x 1/8"	$5.99
51331	63-67	Oil Pressure Line Fitting - 1/8" x 1/8"	$5.99
34954	63-67	Oil Pressure Line Grommet - 2 Hole w/o AC	$6.99
34955	63-67	Oil Pressure Line Grommet - 4 Hole w/ AC	$6.99
51330	63-65	Oil Pressure Line Kit - All - w/ FI	$13.99
27582	63-67	Oil Pump - Standard 327	$35.99
27583	63-67	Oil Pump - High Pressure 327	$45.99
35478	63-67	Oil Pump Shaft - 327	$37.99
36545	65-67	Oil Pump Shaft - 396 / 427 Exc. HP	$21.99
36544	65-67	Oil Pump Shaft - 396 / 427 - HP	$16.99
51327	64-65	Oil Tube to Vac Restriction Fitting Hose	$10.99
27530	63-67	Spin On Oil Filter Conversion Kit	$18.99

#27540 1965-67 Steel 396/427 Oil Line Kit

#28371 1965-67 Oil Pan - 396 / 427

1963-67 OIL PAN

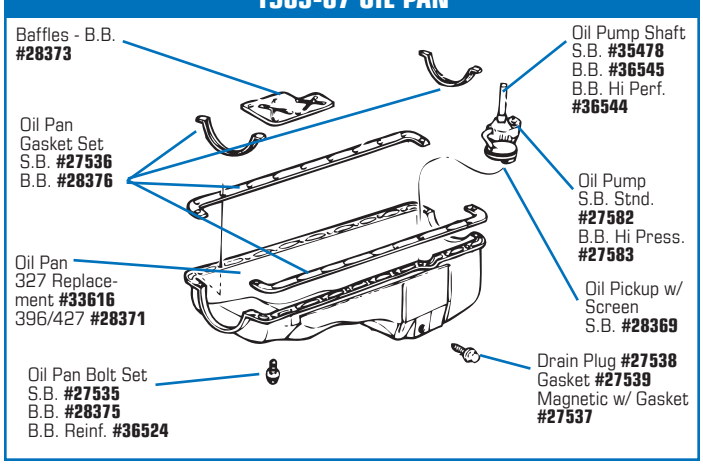

800-458-3475
CorvetteAmerica.com

WARNING: Cancer and Reproductive Harm — www.P65Warnings.ca.gov

1963-67 OIL FILTER

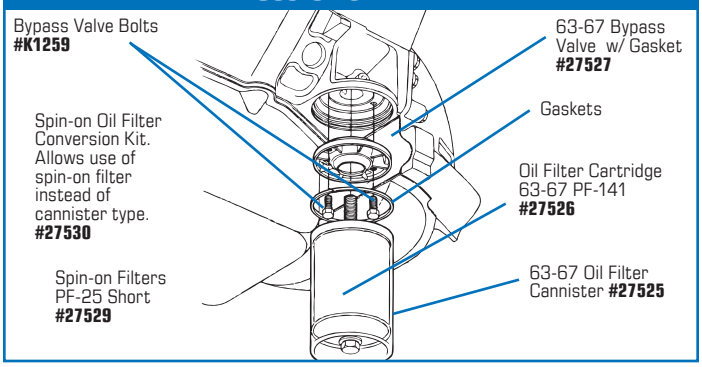

#40181 1963-67 Aluminum Valve Cover - 327 w/ Correct Flaw

#36526 1963-67 Starter Motor - 327

#36528 1965-66 Starter Motor - 396 / 427

#37141 1963-66 327 Steel - Painted Orange

#33654 1963-67 Starter Solenoid

#42209 1966-67 Starter Solenoid Wire Clip

#37142 1963-66 Chrome - 327

Engine - Starter

33087	63-67 Starter Bolt Shim Kit - 5 pc	$6.99
36526	63-67 Starter Motor - Remanufactured - 327	$115.99
36528	65-66 Starter Motor - Remanufactured - 396 / 427	$113.99
33067	63-67 Starter Motor Bolt - 4-21/32"	$6.99
33065	65-67 Starter Motor Bolt - 1-27/32"	$4.99
33066	66-67 Starter Motor Bolt - 3-5/8"	$7.99
27549	63 Starter Motor Brace	$13.99
30821	64-67 Starter Motor Brace - 327	$13.99
33063	65-67 Starter Motor Brace - 396 or L88	$21.99
30824	66-67 Starter Motor Brace - 427	$10.99
34938	63-67 Starter Motor Brace Bolt	$0.99
34939	63-67 Starter Motor Brace Nut	$1.09
33654	63-67 Starter Solenoid	$53.99
30826	66-67 Starter Solenoid Battery Cable Clamp - 427	$17.99
30823	64-67 Starter Solenoid Shield - 327	$10.99
34937	64-67 Starter Solenoid Shield Screw	$1.99
K1333	63-67 Starter Solen. Terminal Nuts & Lock Washers Set	$5.99

1963-67 STARTER

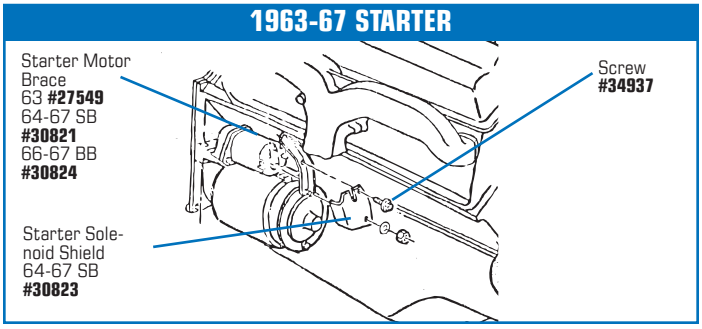

Valve Covers

40181	63-67 327 - Aluminum w/ Corvette, w/ Correct Flaw	$86.99
42221	63-67 327 - Aluminum w/ Corvette, w/o Flaw	$163.99
37142	63-66 327 - Chrome - pr	$137.99
37141	63-66 327 - Steel - Painted Orange - pr	$111.99
1851	65-67 427 - Replacement - Chrome w/ Drippers - pr	$111.99
1865	65-67 427 - Replacement - Orange w/ Drippers - pr	$121.99

Valve Cover Components

K1272	63E	Valve Cover Bolts - Aluminum Covers - 8 pc set	$4.99
33422	63-67	Valve Cover Bolts - Aluminum Covers - 8 pc set - 63 L	$8.99
K1268	63E	Valve Cover Bolts - Steel Covers - 8 pc set	$3.99
33423	63-66	Valve Cover Bolts - Steel Covers - "RBW" - 8 pc set - 63 L	$5.99
K1460	67	Valve Cover Bolts - Steel Covers - "RBW" - 8 pc	$10.99
K1462	65-67	Valve Cover Bolt Set - "TR" - 396 / 427 - 14 pc	$11.99
33426	65-66	Valve Cover Bolt Set - "RBW" - 396 / 427 - 14pc	$10.99
33427	67	Valve Cvr Bolt Set - 427 "RBW" w/o Radio - 14 pc	$16.99
34948	67	Val. Cvr Bolt Set - 427 10 RBW & 4 SBC - 14 pc	$16.99
34949	67	Valve Cover Bolt Set - 427 w/AC - 9 RBW & 5 SBC - 14 pc	$16.99
32495	63-65	Valve Cover Bolt Reinforcements - Steel - 8 pc	$5.99
33428	66-67	Valve Cover Bolt Reinforcements - 327 - 8 pc	$7.99
33429	65-67	Valve Cover Bolt Reinforc. - 396 / 427 - 14 pc	$13.99
27515	63-67	Valve Cover Gaskets - Small Block - Cork - pr	$12.99
51326	65-67	Valve Cover Gaskets - Big Block - Correct - pr	$20.99
28358	65-67	Valve Cover Gaskets - Big Block - pr	$14.99
32498	63-67	Temperature Wire Brkts on Alum. Valve Cover - pr	$7.99
34947	63-67	Temperature Wire Clips on Steel Valve Cover - pr	$7.99

WARNING: Cancer and Reproductive Harm — www.P65Warnings.ca.gov

Engine Compartment Seal Kits & Gaskets

Get quality at affordable prices. Our Seal Kits contain all the correct pieces necessary to reseal your engine compartment.

0586	63	Engine Compartment Seal Kit	$50.99
0587	63	Engine Compartment Seal Kit - w/ AC	$55.99
0588	64-65	Engine Compartment Seal Kit	$52.99
0589	64-65	Engine Compartment Seal Kit - w/ AC	$59.99
0590	65	Engine Compartment Seal Kit - 396 Only	$62.99
0591	66	Engine Compartment Seal Kit	$50.99
0592	66	Engine Compartment Seal Kit - 327 - w/ AC	$113.99
0593	66	Engine Compartment Seal Kit - 427 - w/ AC	$73.99
0594	67	Engine Compartment Seal Kit	$50.99
0595	67	Engine Compartment Seal Kit - 327 - w/ AC	$100.99
0596	67	Engine Compartment Seal Kit - 427 - w/ AC	$106.99
27585	63-67	Engine Gasket Set - 327	$47.99
29269	65-67	Engine Gasket Set - 396 / 427	$101.99
42210	63-67	Head Gaskets - Small Block - pr	$27.99
42211	65-67	Head Gaskets - Big Block - pr	$53.99
27579	63-67	Intake Manifold Gasket Set - Exc. FI - 327	$23.99
27580	63-65	Intake Manifold Gasket Set - FI	$39.99
29266	66-67	Intake Manifold Gasket Set - 427 - Oval Port	$24.99
29265	65-67	Intake Man. Gasket Set - 396/427 - Square Port	$26.99

Engine Compartment Splash Shields

34953	63-67	Inner Fender Lower Seal Set	$8.99
34951	64-67	Inner Fender Upper Rear Seals - pr	$10.99
34952	64-67	Inner Fender Upper Front Seals - pr	$10.99
33079	64-67	Inner Splash Shields - 327 - pr	$44.99
33080	65-67	Inner Splash Shields - 396 / 427 - pr	$44.99
33082	64-67	Inner Splash Shield Mount Bracket - LH	$16.99
33083	64-67	Inner Splash Shield Mount Bracket - RH	$16.99
33081	64-67	Inner Splash Shield Mount Kit - 8 pc	$8.99
33084	63-67	Outer Splash Shield - LH	$40.99
33085	63-67	Outer Splash Shield - RH	$40.99
K1316	63-67	Outer Splash Shield Mount Kit - 8 pc	$6.99
33086	63-67	Outer Splash Shield Seals - pr	$11.99
0654	63-67	Outer Splash Shield Seal Staples - 25 pc	$3.99

1963-67 SPLASH SHIELDS

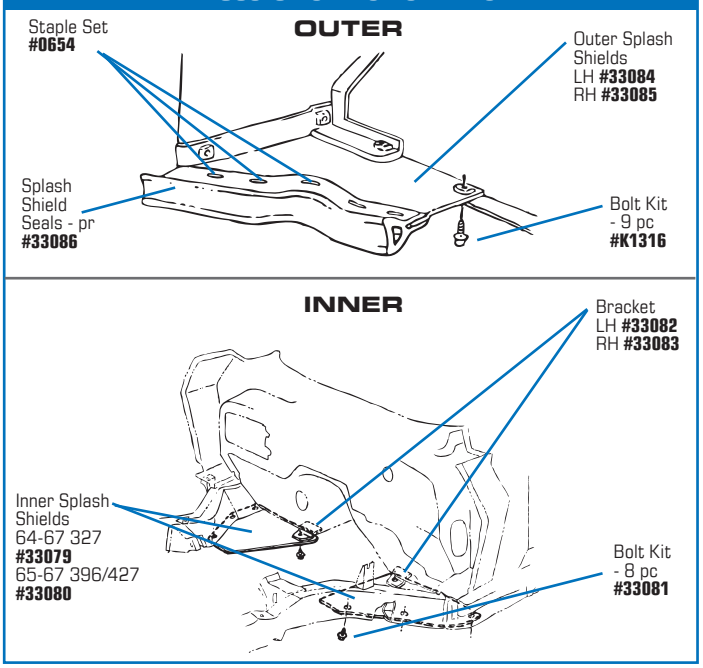

#30870 Crankshaft Pulley

#27560 Harmonic Balancer

MADE BY Corvette America

#33086 1963-67 Outer Splash Shield Seals

1963-67 ENGINE MOUNT

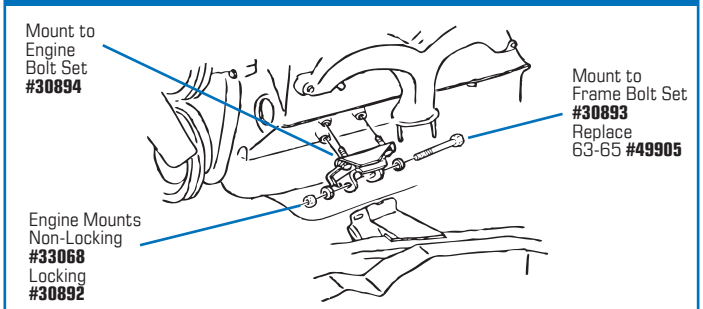

#30892 Engine Mount Locking Replacement

#33068 Engine Mount Non-Locking

Engine Mounts

30892	63-67	Engine Mount - Locking Replacement	$17.99
33068	63-67	Engine Mount - Non Locking	$27.99
34832	63-67	Engine Mount - Poly	$86.99
30907	63-67	Engine Mount Bolt, Washer & Nut Set	$4.99
52603	63-67	Engine Mount Bracket - LS	$152.99
30893	63-67	Engine Mount to Frame Bolt Set - Non-Lock only	$10.99
49905	63-65	Engine Mount to Frame Bolt Set - Non-Lock UR	$17.99
30894	63-67	Engine Mount to Engine Bolt Set - 6 pc	$13.99
52604	63-67	Engine Mount Kit - LS	$254.99
33069	66-67	Engine Mount Shim - 427 w/ AC	$10.99

800-458-3475
CorvetteAmerica.com
WARNING: Cancer and Reproductive Harm — www.P65Warnings.ca.gov

Pulleys & Balancers

30882	65-67	Crankshaft Balancer - 425 / 435 hp	$284.99
30870	63-67	Crank. Pulley - PS Add on - 327 - Exc. 65-67 SHP	$65.99
31067	63-65	Crankshaft Pulley - 250 / 300 hp	$52.99
30873	65-67	Crankshaft Pulley - Lower - 427	$213.99
27570	63-67	Crankshaft Pulley - Replacement	$68.99
31068	66-67	Crankshaft Pulley - Single 300 / 350 hp	$73.99
K1381	63-67	Crankshaft Pulley Mount Bolts - 327 Exc. SHP - 3 pc - "E"	$2.99
30887	65-67	Crankshaft Pulley Bolts - Big Block - 3 pc - "TR"	$2.99
27560	63-67	Harmonic Balancer - 327 hp - Correct Finned	$466.99
27561	63-67	Harmonic Balancer - 327 SHP & FI - Replace	$104.99
36538	66-67	Harmonic Balan. - 327 / 300 & 350 hp - Rebuilt	$162.99
30881	65-67	Harmonic Balancer - Big Block Exc. SHP	$147.99
27562	63-67	Harmonic Balancer Bolt Kit - 327 SHP	$10.99
30885	65-67	Harmonic Balancer Bolt / Washer Kit - Big Block	$12.99
35462	63-65	Harmonic Balancer Rebuild Kit	$47.99
34944	63	Idler Pulley - 327 / 340 - 375 HP - Zinc	$129.99
34945	63-65	Idler Pulley - 327 / 340, 360, 375 HP - Black	$136.99
34946	63-65	Idler Pulley Mount Bolt & Washer	$1.99
27566	63-65	Idler Pulley Mount Stud Kit w/ hp	$12.99

Additional Engine Components

33101		Cast Iron Blast Paint - Aerosol	$11.99
33102		Cast Iron Blast Paint - Hi-Temp	$12.99
42220	63-67	Bell Housing Pins - Rear of Block - pr	$13.99
42214	63-67	Block Plug - Front Square Head	$3.99
42219	63-67	Cam Plug - Rear Block Square Hole	$1.99
42217	65-67	Drain Plugs - Lower Side of Block Hex - pr	$14.99
42215	65-67	Dowel Pins - Head to Block - SB - 5/16" - 4 pc	$2.99
42216	65-67	Dowel Pins - Head to Block - BB - 5/8" - 4 pc	$2.99
1598	63-67	Engine Paint - Orange	$10.99
33106		Frame & Suspension Paint - Black - Aerosol	$8.99
36547	65-67	Freeze Plug - Big Block - Correct	$4.99
27581	63-67	Freeze Plug - Small Block - Correct	$4.99
35479	63-67	Head Bolts - Small Block - 1 side	$42.99
33100	65-67	Head Bolt Set - 396 / 427 "M"	$78.99
42207	63-67	Head Gasket - Small Block	$12.99
42210	63-67	Head Gaskets - Small Block - pr	$27.99
50088	65-67	Head Gasket - Big Block	$27.99
42211	65-67	Head Gaskets - Big Block - pr	$53.99
42218	65-67	Plug - Side of Block - Square Hole - BB - 4 pc	$10.99
42225	63-67	Rocker Arm, Ball & Nut - Small Block	$32.99
42226	63-67	Rocker Ball - Small Block	$6.99
42227	63-67	Rocker Nut - Small Block	$3.99
42228	65-67	Rocker Arm, Ball & Nut - Big Block	$32.99
42229	65-67	Rocker Nut - Big Block	$2.99
42222	63-67	Valve Push Rod - Small Block	$13.99
42212	63-66	Valve Spring - Small Block	$23.99
42213	63-66	Valve Spring Cap - Small Block	$6.99
42230	63-66	Valve Spring & Cap Kit - Small Block	$32.99
42231	67	Valve Spring & Cap Kit - Small Block	$20.99
42232	65-67	Valve Spring & Cap Kit - Big Block	$46.99
42233	63-67	Valve Stem Retainers - Small Block - pr	$11.99
42234	65-67	Valve Stem Retainers - Big Block - pr	$7.99

Discounts & Coupons Emailed!

Enter your email address on CorvetteAmerica.com

Exhaust

#20855 1963 2" 327 Exhaust Manifold

#20861 1964-65 2.5" 327 Exhaust Manifold - LH

#20860 1963-65 2.5" 327 Exhaust Manifold - RH

Manifolds - Small Block

20855	63	Exhaust Manifold - LH - 2" - 327 - Fits all Except SHP - Casting #3749965	$209.99
33732	64-67	Exhaust Manifold - LH - 350 w/o HP	$152.99
20857	63-65	Exhaust Manifold - RH - 2" - 327 - All 63-65 250, 300 hp Auto - Casting #3750556	$266.99
33750	66-67	Exhaust Manifold - RH - 2" - 327 - 300 / 350	$239.99
20870	63	Exhaust Manifold - LH - 2.5" - 327 - All 327 except 250 hp & 63 w/ FI. - Casting #3797901	$234.99
20872	63-65	Exhaust Manifold - LH - 2.5" - 327 - Replac.	$101.99
20873	63-65	Exhaust Manifold - RH - 2.5" - 327 - Replac.	$101.99
20861	64-65	Exhaust Manifold - LH - 2.5" - 327 - All 327 / 300, 350 & 365 hp	$254.99
20858	63-65	Exhaust Manifold - LH 2.5" - 327 - FI - Includes Choke Tube - Casting #3797942 - 902 & 942 on Sides	$321.99
20860	63-65	Exhaust Manifold - RH 2.5" - 327 - Fits all except FI - Casting #3797902	$279.99
20862	64-65	Exhaust Manifold - RH 2.5" - 327 w/ AC & SHP.	$281.99
23145	66-67	Exhaust Manifold - LH 2" - SB - w/o A.I.R	$259.99
20859	63-65	Exhaust Manifold - RH 2.5" - 327 - FI only	$274.99
33732	64-67	Exh. Manifold - LH 2"- 300 & 350 w/o AC	$152.99
40528	65	Exh. Manifold - RH 2" - 327 - 250/300 w/ AC	$249.99
33733	66-67	Exhaust Manifold - RH 2"- 300 & 350 - Replacement with A.I.R. holes	$162.99
1000		Exhaust Manifold Dressing	$14.99

#1000 Manifold Dressing *Makes Manifolds look like NEW!*

WARNING: Cancer and Reproductive Harm — www.P65Warnings.ca.gov

#43544 1966-67 Replacement LH Exhaust Manifold

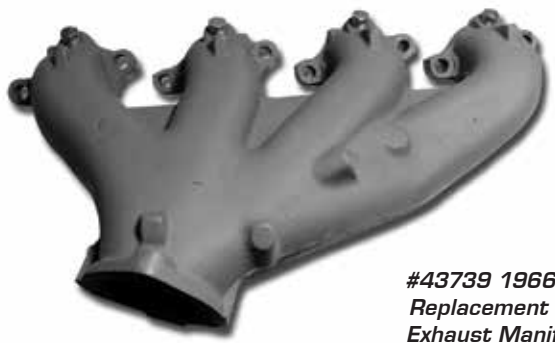

#43739 1966-67 Replacement RH Exhaust Manifold

Manifolds - Big Block

Various original production dates available where indicated.
Free date coding where noted in listings below.

20863 65 Exhaust Manifold LH 396 - Dated Casting #3856301 ..... $490.99
20864 65 Exhaust Manifold RH 396 - Dated Casting #3856302 ..... $499.99
20865 66-67 Exhaust Manifold - LH - 427 w/o A.I.R. - Dated .. $414.99
20868 66-67 Exhaust Manifold - RH - 427 w/o A.I.R. - Dated .. $414.99
20866 66-67 Exhaust Manifold - LH - 427 w/ A.I.R. - Dated $417.99
20869 66-67 Exhaust Manifold - RH - 427 w/ A.I.R. - Dated $419.99
43544 66-67 Exhaust Manifold - LH - Replacement $177.99
43739 66-67 Exhaust Manifold - RH - Replacement $193.99
40534 66-67 Header Pipe - Left Front - 427 ..... $65.99
1000 Manifold Dressing $14.99

A.I.R. = Air Injection Reactor

FLOWMASTER
THE PERFORMANCE TECHNOLOGY COMPANY

Headers

53001 63-67 Headers 409S - Flowmaster Universal Center Dump Shorty - 327/350 V8, Block Hugger - High Temp Ceramic Coating - 2.50" Ball/Socket Flange Out - Pair $193.99

#29362 1965-67 Big Block Exhaust Manifold Gasket Set

#33734

#29371

Misc. Manifold Components

27592 63-65 Choke Tube in Exhaust Manifold, SS $18.99
33734 66-67 Emission Hole Plugs for Exh. Manifold - 8 pc set . $22.99
33108 63 Exhaust Manifold Bolt Set - All Engines $22.99
33109 64-65 Exhaust Manifold Bolt Set - FI $22.99
27596 64-67 Exhaust Manifold Bolt Set - 327 w/o AC - 12 pc .. $16.99
29363 64-67 Exhaust Manifold Bolt Set - 327 w/ AC - 12 pc ... $29.99
29364 65-67 Exhaust Manifold Bolt Set - 396 / 427 ..... $21.99
29370 65-67 Exhaust Manifold Bolt Set - 396 / 427 w/ PS $28.99
29371 66-67 Exhaust Manifold Bolt Set - 427 w/ AC $32.99
29372 66-67 Exhaust Manifold Bolt Set - 427 w/ PS & AC $36.99
29361 63-67 Exhaust Manifold Gasket Set - Small Block $12.99
29362 65-67 Exhaust Manifold Gasket Set - Big Block $14.99
27595 63 Exhaust Manifold Lock Set - SS $15.99
28381 64-65 Exhaust Manifold Lock Set - 327 - SS $16.99
28382 66-67 Exhaust Manifold Lock Set - 327 - SS $16.99
28383 65-67 Exhaust Manifold Lock Set - 396 / 427 - SS $16.99
33110 65-67 Exhaust Manifold Studs - BB - pr $8.99
27597 63-67 Exh. Manifold Washers - All Engines - 8 pc set $6.99

A.I.R. = Air Injection Reactor

Mufflers

41951 63-67 Mufflers - 2" - pr $199.99
41952 63-67 Mufflers - 2 1/2" - pr $199.99
41980 63-67 Mufflers - 2 1/2" - pr - Off Road / N11 ..... $310.99

800-458-3475
CorvetteAmerica.com
WARNING: Cancer and Reproductive Harm — www.P65Warnings.ca.gov

1963-67 HEAT RISER

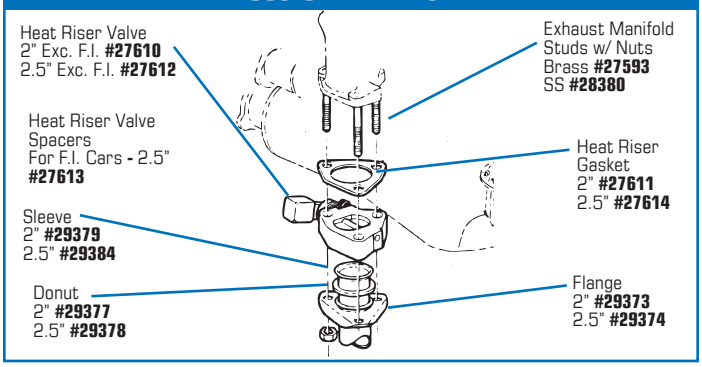

Heat Riser

29377	63-67 Exhaust Donut - 2"	$3.99
29378	63-67 Exhaust Donut - 2.5"	$3.99
29379	63-67 Exhaust Donut Sleeve - 2"	$7.99
29384	63-67 Exhaust Donut Sleeve - 2.5"	$8.99
27611	63-67 Exhaust Heat Riser Gasket - 2"	$2.99
27614	63-67 Exhaust Heat Riser Gasket - 2.5"	$2.99
27610	63-67 Exhaust Heat Riser Valve - 2" - Except FI	$65.99
27612	63-65 Exhaust Heat Riser Valve - 2.5" - Except FI	$68.99
51322	63-67 Exhaust Heat Valve Spacer - 2" w/o FI	$42.99
27599	63-67 Exhaust Heat Valve Spacer - 2" w/ Fuel Injection	$47.99
27613	63-65 Exhaust Heat Valve Spacer - 2.5" w/ FI	$50.99
27594	63-67 Exhaust Manifold Brass Nuts - 6 pc	$7.99
35499	63-67 Exhaust Manifold Nuts - Correct - 6 pc	$7.99
27593	63-67 Exhaust Manifold Studs w/ Brass Nuts - 12 pc	$12.99
28380	63-67 Exhaust Manifold Studs w/ Nuts - SS	$30.99
29373	63-67 Exhaust Pipe Flange - 2"	$7.99
29374	63-67 Exhaust Pipe Flange - 2.5" Flat Type	$9.99
33739	63-67 Exhaust Pipe Sealer - 6 oz.	$4.99

FLOWMASTER
THE PERFORMANCE TECHNOLOGY COMPANY

Crossmember Back System

53012	63-67 Exhaust System - Crossmember-Back System - Dual Rear Exit - Flowmaster Force II - 50 Series Delta Flow Mufflers - Moderate Sound - 327 Small Block V8	$829.99

Chambered Exhaust Systems

Includes Bracket for Hanger & Clamps. Hanger & Tips not included.

32321	63	Exhaust System - Chambered SB 2" - Auto	$407.99
32322	63	Exhaust System - Chambered SB 2.5" - Manual 4 Speed - 63E	$407.99
32320	64-67	Exhaust System - Chambered SB 2.5" - Manual 4 Speed	$407.99
32323	64-67	Exhaust System - Chambered 2.5" - Hi-Performance - 4 Speed	$407.99
32324	65-67	Exhaust System - Chambered BB 2.5" - 4 Spd	$407.99

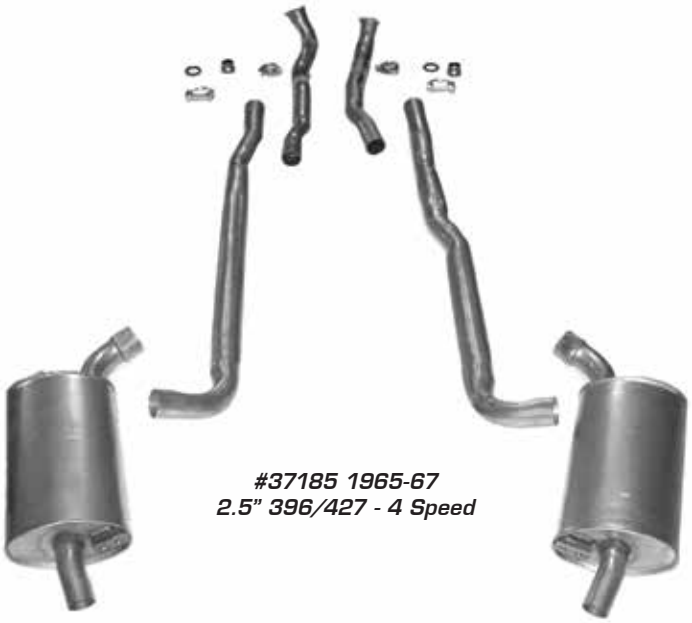

Complete Exhaust Systems

Made to fit exactly like the originals, our exhaust systems are made of long-lasting aluminized steel (65% Stainless Steel, 25% Aluminum and 10% Carbon). Systems include the header pipe flanges, sleeves, donut gaskets, clamps and mufflers. For originality, we offer systems with welded secondary pipe and muffler for regular or off-road mufflers. **For convenience and ease of installation, we also offer systems with a separate secondary pipe and muffler.** Pipe sets and mufflers also available separately. Hangers sold separately - see listings. Additional shipping charges apply.

Exhaust Systems with Separate Secondary Pipe & Muffler

37181	63	2"	$370.99
37182	63	2 1/2"	$379.99
37183	64-67	2" - 64-65 All, 66-67 Auto	$370.99
37184	64-65	2 1/2"	$381.99
37185	65-67	2 1/2" - 396 / 427 4-Spd	$381.99
37186	66-67	2 to 2 1/2" - 327 Manual	$391.99
37187	66-67	2 1/2" - 427 Auto	$381.99

Exhaust Systems with Welded Secondary Pipe & Standard Muffler

37188	63	2"	$394.99
37189	63	2 1/2" - does not include hangers & tips	$380.99
37190	64-65	2 1/2"	$422.99
37191	64-67	2"	$371.99
37192	65-67	2 1/2" - 396 / 427 4-Spd	$427.99
37193	66-67	2" to 2 1/2" - 327	$427.99
37194	66-67	2 1/2" - 427 Auto	$429.99

Exhaust Pipes Only - 4 pc sets

22407	63	2"	$263.99
22408	63	2 1/2"	$338.99
22409	64-67	2"	$263.99
22410	64-65	2 1/2"	$336.99
22411	65	2 1/2" - 396	$335.99
22412	66-67	2 1/2" - 327 - 4 Speed only	$298.99
22413	66-67	2 1/2" - 427 - Auto	$314.99
22411	66-67	2 1/2" - 427 - 4 Speed	$335.99

WARNING: Cancer and Reproductive Harm — www.P65Warnings.ca.gov

#2180 1963
Exhaust Hanger Kit - 2"

#1008 1963 Muffler Hangers w/ Brackets

#28387 1965-67 Exhaust Heat Shields

Side Exhaust System includes:

Aluminized Pipes • Covers

Rocker Panels • Mounting Kit

EXHAUST PIPE HANGER KITS & COMPONENTS

Kits contain center exhaust yoke or bracket, clamps & muffler hangers. Individual components also available.

2180	63	Center Exhaust Hanger - 2"	$190.99
2181	63	Center Exhaust Hanger - 2 1/2"	$190.99
28378	64-67	Center Exhaust Hanger Bracket - 2"	$27.99
28379	64-67	Center Exhaust Hanger Bracket - 2 1/2" Manual	$28.99
34980	64-67	Center Exhaust Hanger Clamps - 2"- pr	$12.99
34981	64-67	Center Exhaust Hanger Clamps - 2 1/2"- pr	$16.99
22140	63	Center Exhaust Hanger Rebuild Kit	$38.99
42799	64-67	Exhaust Hanger Kit - 2"	$59.99
2182	64-67	Exhaust Hanger Kit - 2 1/2"	$63.99
23122	63-67	Exhaust Clamp - 2" Flat Top U-Bolt	$20.99
33735	63-67	Exhaust Clamp - 2" HD	$4.99
33737	63-67	Exhaust Clamp - 2 1/2" HD	$4.99
33111	63-67	Exhaust Clamp - 2" Guillotine Style	$4.99
33112	63-67	Exhaust Clamp - 2 1/2" Guillotine Style	$7.99
32552	63-67	Exhaust Clamp - 2" Stainless Steel	$9.99
33114	63-67	Exhaust Clamp - 2 1/2" Stainless Steel	$12.99
28384	63-64	Exhaust Heat Shield Set w/ Straps - 2" - pr	$52.99
28387	65-67	Exhaust Heat Shield Set w/ Straps - 2" - pr	$52.99
28385	63	Exhaust Heat Shield Set w/ Straps - 2 1/2"- pr	$60.99
28388	64-65	Exhaust Heat Shield Set w/ Straps - 2 1/2" - pr	$46.99
28389	66-67	Exhaust Heat Shield Set w/ Straps - 2 1/2" - pr	$46.99
1008	63	Muffler Hangers w/ Brackets - pr	$85.99
1009	64-67	Muffler Hangers - pr	$33.99
34977	63	Muffler Hanger Bolt, Nut & Washer Set	$9.99
K1456	64-67	Muffler Hanger Bolt, Nut & Washer Set	$8.99
28386	63	Rear Exhaust Panel / Bezel Heat Shields - pr	$101.99
K1150	63-67	Rear Exhaust Panel End Bolt & Nut Set - 4 pc	$2.99
37616	63-67	Rear Exhaust Panel Nut Plate & Rivet Set	$37.99

COMPLETE SIDE EXHAUST SYSTEMS

Includes: Side Pipes, Covers, Rocker Panels & Mounting Kit. Add your choice of Stock GM, Ultra Quiet, 1 3/4" or 2 1/4" Side Pipes to your order separately. Side Pipes are included with this complete system.

51556	65-67 Side Exhaust System w/ Covers	$1733.99

SIDE EXHAUST PIPES

Stock GM

32341	65-67 Side Exh. Pipes - 2" Alum. Stock GM Sound	$509.99
32343	65-67 Side Exh. Pipes - SB 2.5" Alum. Stock GM Sound	$509.99
32345	65-67 Side Exh. Pipes - BB 2.5" Alum. Stock GM Sound	$509.99

Ultra Quiet

32342	65-67 Side Exhaust Pipes - 2" Alum. Ultra Quiet	$611.99
32344	65-67 Side Exhaust Pipes - SB 2.5" Alum. Ultra Quiet	$611.99
32346	65-67 Side Exhaust Pipes - BB 2.5" Alum. Ultra Quiet	$611.99

1 3/4 Inch Stock Diameter Chamber Tubes

46741	65-67 Side Exh. Pipes - SB - 2" - Aluminized - pr	$611.99
46742	65-67 Side Exh. Pipes - SB - 2 1/2" - Alumin. - pr	$611.99
46743	65-67 Side Exh. Pipes - BB - Aluminized - pr	$611.99

2 1/4 Inch Loud Chamber Tubes

41699	65-67 Side Exh. Pipes - SB - 2" - Aluminized - pr	$509.99
41701	65-67 Side Exh. Pipes - SB - 2 1/2" - Alumin. - pr	$509.99
41703	65-67 Side Exh. Pipes - BB - Aluminized - pr	$509.99

Discounts & Coupons Emailed!

Enter your email address on CorvetteAmerica.com

800-458-3475
CorvetteAmerica.com

WARNING: Cancer and Reproductive Harm — www.P65Warnings.ca.gov

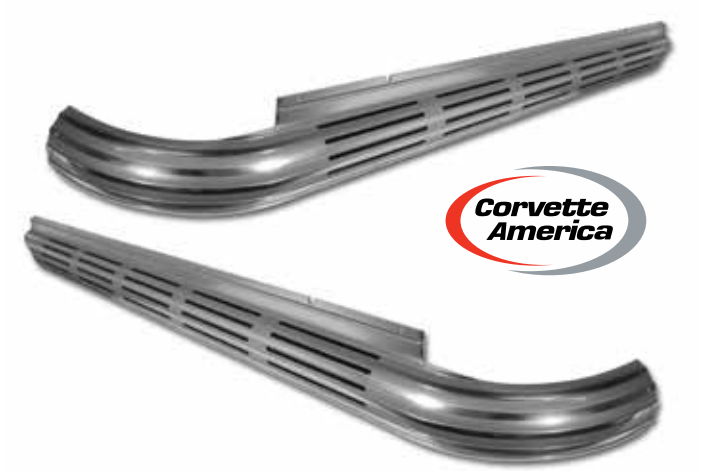

Side Exhaust Cover Restoration Kit

Corvette America makes your job of restoring or repairing the 1965-67 side exhaust covers and rocker panels easier and less costly with the Side Exhaust Cover Restoration Kit!
Kit includes: Side Exhaust Covers (**#25920**), Side Exhaust Rocker Panels (**#X2048**) and Side Exhaust Cover Mounting Kit (**#45518**).

45517 65-67 Side Exhaust Cover Restoration Kit..... **$1325.99**

1965-67 SIDE EXHAUST

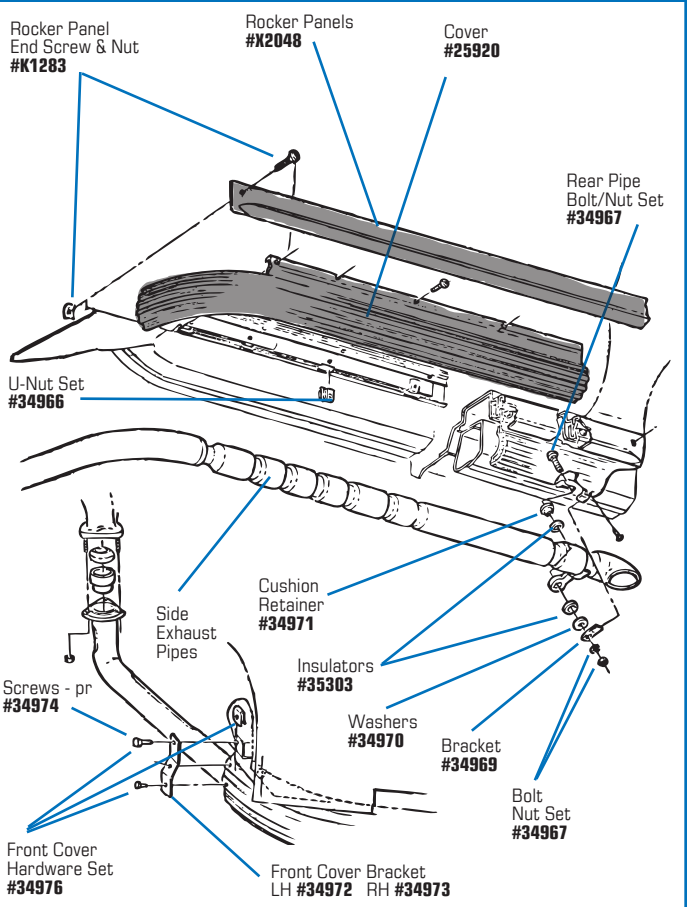

Hardware Kits

#34975 Rear Side Pipe Hardware Kit includes Bolt/Nut Set, Retainers, Insulators and Washers.

#X2576 Side Exhaust Mounting Kit includes Rear Pipe Hardware Kit, Front Cover Hardware Set, Upper Screws & U-nuts, End Screws & U-nuts.

Side Exhaust Covers

Restoration covers - sold as a pair for significant savings!

25920 65-67 Side Exhaust Covers - pr..... **$1274.99**

#X2048 1965-67 Side Exhaust Rocker Panels

Side Exhaust Components

42254	65-67 Side Exhaust Cover Fiberglass Insulator - Long	**$244.99**
42255	65-67 Side Exhaust Cover Fiberglass Insulator - Short	**$96.99**
34972	65-67 Side Exhaust Cover Front Bracket - LH	**$7.99**
34973	65-67 Side Exhaust Cover Front Bracket - RH	**$7.99**
34974	65-67 Side Exhaust Cover Front Bracket Screws - pr	**$1.99**
34976	65-67 Side Exhaust Cover Front Hardware Set	**$19.99**
34969	65-67 Side Exhaust Cover Rear Bracket	**$5.99**
K1413	65-67 Side Exhaust Cover Rear Lower Screws - pr	**$1.99**
34966	65-67 Side Exhaust Cover U-Nuts - 12 pc set	**$15.99**
K1266	65-67 Side Exhaust Cover Upper Screws - 12 pc set	**$5.99**
X2576	65-67 Side Exhaust Mounting Kit	**$61.99**
45518	65-67 Side Exhaust Covers Mounting Kit	**$34.99**
25900	65-67 Side Exhaust Pipe - LH 327 - 2 1/2"	**$260.99**
25902	65-67 Side Exhaust Pipe - LH 327 - 2"	**$236.99**
34967	65-67 Side Exhaust Pipe Rear Bolt - Lockwasher & Nut - 6 pc set	**$1.99**
34971	65-67 Side Exhaust Pipe Rear Cushion Retainer	**$3.99**
34975	65-67 Side Exhaust Pipe Rear Hardware Set	**$60.99**
35303	65-67 Side Exhaust Pipe Rear Insulator	**$2.99**
34970	65-67 Side Exhaust Pipe Rear Large Washers - pr	**$4.99**
X2048	65-67 Side Exhaust Rocker Panels - pr	**$236.99**
41805	65-67 Side Exhaust Rocker Panel - 2 req'd	**$153.99**
K1283	65-67 Side Exhaust Rocker Panel End Screw & Nut Set	**$2.99**
34982	65-67 Side Exhaust Transmission Spacer	**$5.99**

FAST Shipping!

Fast Service & Delivery!
Most orders are processed & shipped the same day!

#2128 1963 Exhaust Bezels

#2129 1964-65 Exhaust Bezels

#2140 1966-67 Exhaust Bezels

#X2000 1963-67 Stainless Steel Exhaust Tips

#2127 1963-67 Stainless Steel Exhaust Tips w/ Weld Seam

#2127 Reproduced with Weld Seam like the originals.

#X2000 & #2127 Feature originally stamped GM part number.

EXHAUST BEZELS & TIPS

2128	63	Exhaust Bezels - pr	$126.99
2129	64-65	Exhaust Bezels - pr	$126.99
49459	66-67	Exhaust Bezels - RH	$60.99
49458	66-67	Exhaust Bezels - LH	$60.99
2140	66-67	Exhaust Bezels - pr	$116.99
34694	63-65	Exhaust Bezel Mount Screws - 12 pc	$5.99
34695	66-67	Exhaust Bezel Mount Nuts - 6 pc set	$3.99
X2000	63-67	Exh. Tips - S.S. w/ GM Numbers - w/o Weld - pr	$40.99
2127	63-67	Exh. Tips - S.S. w/ GM Numbers - w/ Weld - pr	$50.99
34979	63-67	Exhaust Tip Clamps - pr	$12.99

Corvette America Makes PARTS too!

*For decades we have manufactured the best Corvette Interior components. But interiors are not all we do. The same attention to detail & development is also applied to many of our parts. From mid-year wheels to park brake shoes & shift knobs, look for the **Made by Corvette America** symbol & know you are getting a quality product at a reasonable price.*

MADE BY Corvette America

800-458-3475
CorvetteAmerica.com

WARNING: Cancer and Reproductive Harm — www.P65Warnings.ca.gov

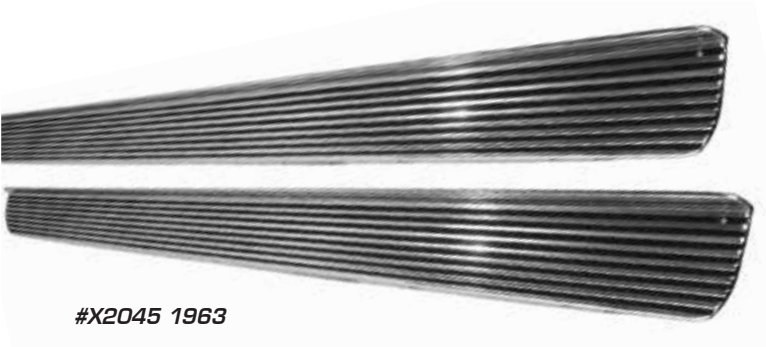

#X2045 1963

#X2046 1964

#X2047 1965

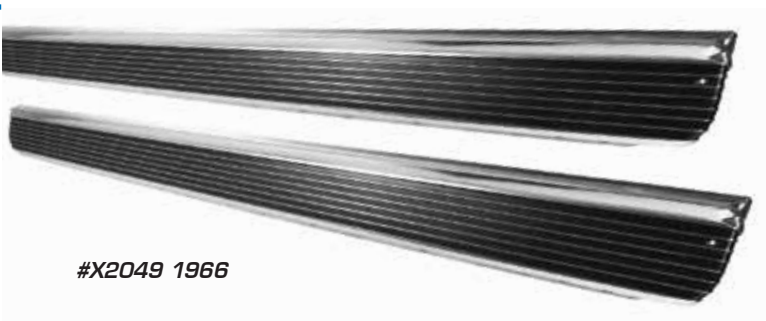

#X2049 1966

#X2048 1965-67
Side Exhaust

#X2077 1963-67
Retaining Strip

ROCKER PANELS - PAIR

X2045	63	Rocker Panels - pr	$339.99
X2046	64	Rocker Panels - pr	$339.99
X2047	65	Rocker Panels - pr	$339.99
X2048	65-67	Rocker Panels - Side Exhaust - pr	$236.99
X2049	66	Rocker Panels - pr	$339.99
X2077	63-67	Rocker Panel Retaining Strip - ea	$14.99

INDIVIDUAL ROCKER PANELS

41802	63	Rocker Panel	$195.99
41803	64	Rocker Panel	$195.99
41804	65	Rocker Panel	$195.99
41805	65-67	Rocker Panel - Side Exhaust	$153.99
41806	66	Rocker Panel	$205.99

1963-67 ROCKER PANEL

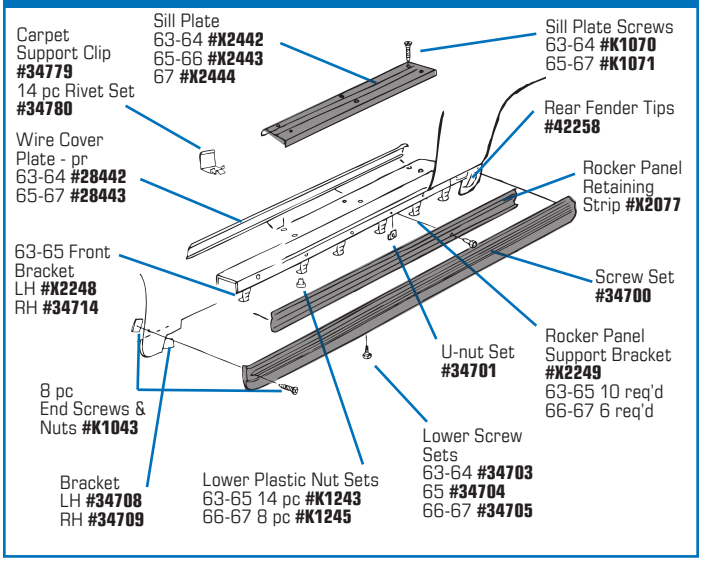

ROCKER PANEL COMPONENTS

42258	63-67	Lower Fender Tips - Rear - pr	$132.99
K1043	63-67	Rocker Panel End Screws & Nuts - 8 pc	$2.99
34708	63-67	Rocker Panel Front Bracket - LH	$9.99
34709	63-67	Rocker Panel Front Bracket - RH	$9.99
34710	63-67	Rocker Panel Front Bracket Rivets - 4 pc	$1.99
K1243	63-65	Rocker Panel Lower Plastic Nuts - 14 pc	$6.99
K1245	66-67	Rocker Panel Lower Plastic Nuts - 8 pc	$4.99
34703	63-64	Rocker Panel Lower Screws - 14 pc	$9.99
34704	65	Rocker Panel Lower Screws - 14 pc	$9.99
34705	66-67	Rocker Panel Lower Screws - 8 pc	$6.99
X2077	63-67	Rocker Panel Retainer Strip	$14.99
X2248	63-65	Rocker Support Bracket - Front LH - Weld to Sill	$7.99
34714	63-65	Rocker Support Bracket - Front RH - Weld to Sill	$16.99
X2249	63-67	Rocker Panel Support Bracket - Weld to Sill	$7.99
X2528	63-65	Rocker Panel Support Bracket Set - 10 pc	$71.99
X2529	66-67	Rocker Panel Support Bracket Set - 6 pc	$50.99
34700	63-67	Rocker Panel Support Screws - 12 pc	$6.99
34701	63-67	Rocker Panel Support U-Nuts - 12 pc	$4.99

IN STOCK & READY FOR SHIPPING!

In addition to our regular delivery, we offer more options for getting your packages when you need them. Call our Sales Reps for details.

WARNING: Cancer and Reproductive Harm — www.P65Warnings.ca.gov

#X2442 1963-64 Sill Plate

#X2443 1965-66 Sill Plate

#X2444 1967 Sill Plate

Correct number of Ribs like the originals.

SILL PLATES

X2442 63-64 Sill Plate $20.99
X2443 65-66 Sill Plate $20.99
X2444 67 Sill Plate $25.99
K1070 63-64 Sill Plate Screw Set - 8 pc $3.99
K1071 65-67 Sill Plate Screw Set - 12 pc $3.99
28442 63-64 Wire Cover Floor Plates - pr $32.99
28443 65-67 Wire Cover Floor Plates - pr $32.99

#28402

#34988

REAR WINDOW TRIM

28402 64-67 Coupe Rear Window Molding - Corner $42.99
34988 63 Coupe Rear Window Molding Clips - 26 pc $153.99
K1229 64-67 Coupe Rear Window Molding Clips - 24 pc $17.99
34986 64-67 Coupe Rear Window Mldg Clip Screws - 24 pc $5.99
34987 64-67 Coupe Rear Window Setting Spacers - 12 pc $8.99

MISCELLANEOUS TRIM

28403 64-65 Vent Grille Set - LH & RH Upper Grille, LH & RH Lower Grille & Screws & Nuts for Vent Grilles $358.99
K1422 64-65 Coupe Side Vent Grille Screw & Nut Set $1.99

WINDSHIELD MOLDINGS - COUPE

34781 63-67 Windshield Int. Molding Retainers - Lower - 4 pc $50.99
K1094 64-67 Windshield Interior Molding Screws - Coupe Set .. $3.99
22382 64-67 Windshield Molding - Coupe - LH $160.99
22383 64-67 Windshield Molding - Coupe - RH $160.99
22381 64-67 Windshield Molding - Coupe - Upper $134.99
22384 64-67 Windshield Molding - Coupe - Upper Corner $46.99
43448 64-67 Windshield Molding Clip - Coupe - Corner $8.99
34983 63 Windshield Molding Clips - Coupe - 24 pc set..... $101.99
K1224 64-67 Windshield Molding Clips - Coupe - 26 pc set - w/ Corner Clips $35.99
K1225 64-67 Windshield Molding Clips - Coupe - 24 pc set - No Corner Clips $21.99
28393 64-67 Windshield Molding Clip Screws - Coupe $5.99
37200 63 Windshield Side Molding - Screws in Door Jamb - Coupe - 8 pc set $4.99

1963-67 COUPE WINDSHIELD MOLDINGS

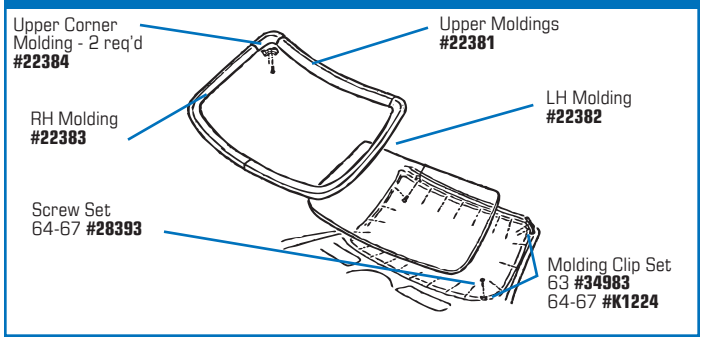

WINDSHIELD MOLDINGS - CONVERTIBLE

34781 63-67 Windshield Int. Mldg Retainers - Lower - 4 pc..... $50.99
K1093 63-67 Windshield Interior Molding Screws - Conv set..... $2.99
41728 64-67 Windshield Molding - Convertible - Lower $214.99
22380 63-67 Windshield Molding - Convertible - Upper $170.99
28391 63-67 Windshield Mldg Retainer - Conv - Upper - 6 req'd $10.99
37202 63-67 Windshield Mldg Retainer Nuts - Conv - 6 pc $1.99
K1223 64-67 Windshield Lower Mldg Clip Set - Conv - 11 pc.... $18.99
28395 64-67 Windshield Lower Mldg Screw Set - Conv - 11 pc.. $3.99
28396 63-67 Windshield Side Molding Clip - Convertible..... $14.99
28397 64-67 WS Side Molding Lower Clips - Convertible - pr... $19.99
37201 63-67 Windshield Side Molding Screws - Conv - 8 pc $2.99
33115 63-67 Windshield Side Molding Upper Retainer Clip Screw & Spacer Set - 4 pc... $13.99
34984 63 Windshield Molding Clips - Conv - 13 pc set..... $53.99
34989 63 Windshield Molding Clip & Screw Set - Conv $174.99
34990 64-67 Windshield Molding Clip & Screw Set - Conv $141.99

1963-67 CONVERTIBLE WINDSHIELD MOLDINGS

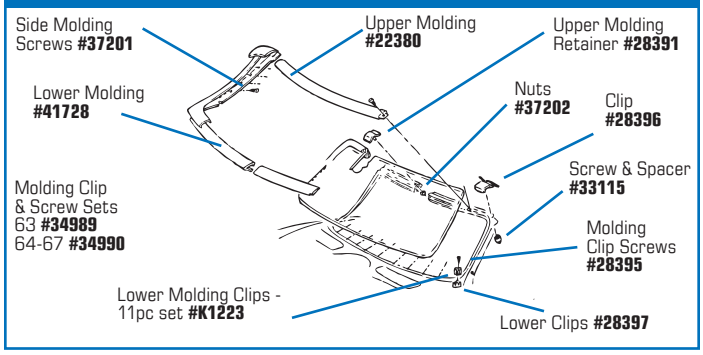

800-458-3475
CorvetteAmerica.com
WARNING: Cancer and Reproductive Harm — www.P65Warnings.ca.gov

1-Piece Front End Door-to-Door - Hand Layered

🚚 **0144**	63-64	Front End - Door to Door	$1789.99
🚚 **0145**	65-66	Front End - Door to Door	$1679.99
🚚 **0146**	67	Front End - Door to Door	$1789.99

Press Molded also available, call for details.

Front End Components

0570	63-67	Header Bar - Metal	$116.99
37533	63-67	Header Bar Bonding Strip - PM	$121.99
K1314	63-67	Body Assembly Round Head Rivet Set - 25 pc (3/16" x 1/2")	$7.99
K1449	63-67	Body Assembly Countersunk Flat Head Rivet Set - 25 pc (3/16" x 1/2")	$6.99
36641	63-67	Body Assembly 1/2" Flat Head Rivet Set - 25 pc (3/8" long)	$3.99

*More **FIBERGLASS** available at*

www.CorvetteAmerica.com

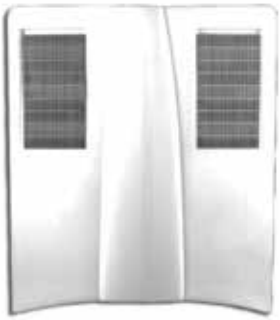

1963

1965 Big Block

Hoods - Press Molded

🚚 **37538**	64	Hood	$1631.99
🚚 **37542**	66	Hood Big Block	$1631.99
🚚 **37543**	67	Hood Big Block	$1631.99

Hoods - Hand Layered

🚚 **0268**	63	Hood - Grilles sold separately	$697.99
🚚 **22490**	63	Hood Grilles - pr	$509.99
🚚 **0269**	64	Hood	$697.99
🚚 **0272**	65-67	Hood - Small Block	$697.99
🚚 **0270**	65	Hood - Big Block	$697.99
🚚 **0271**	67	Hood - Big Block	$697.99

🚚 = Shipped by truck freight. Additional packaging charges for fiberglass items may be required to ensure safe arrival.

Filler Panels - Rear Exhaust

0774	63	Rear Exhaust - Hand Layered	$260.99
0776	64-65	Rear Exhaust - Hand Layered	$149.99
0778	66-67	Rear Exhaust - Hand Layered	$209.99
37616	63-67	Rear Exhaust Panel Nut Plate & Rivet Set	$37.99

Additional packaging charges for fiberglass items may be required to ensure safe arrival.

Filler Panels - Side Exhaust

0775	63	Side Exhaust - Hand Layered	$206.99
0777	64-67	Side Exhaust - Hand Layered	$183.99
37618	64-67	Side Exhaust Panel - Press Molded	$397.99

1963-67 FRONT END COMPONENTS

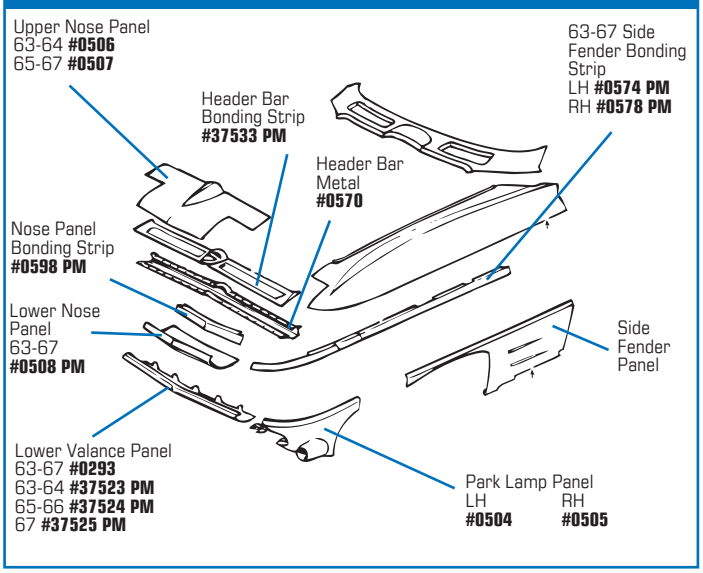

1963-67 REAR BODY COMPONENTS

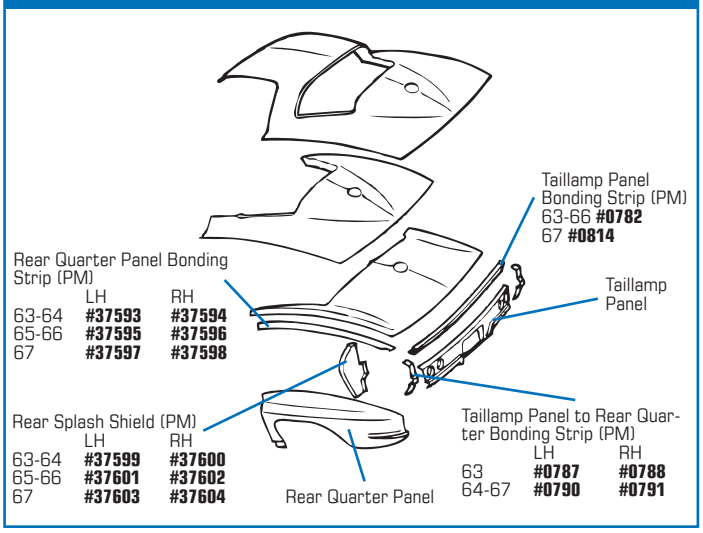

WARNING: Cancer and Reproductive Harm — www.P65Warnings.ca.gov

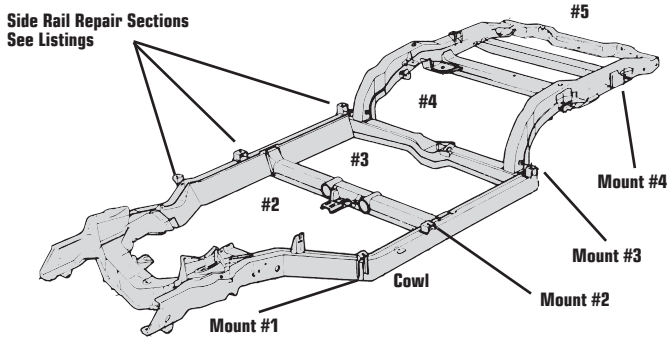

#36646

#33128

FRAME COMPONENTS

46816 63-64 Body on Frame Patch - LH - 4 pc $53.99
46817 63-64 Body on Frame Patch - RH - 4 pc $53.99
46818 65-67 Body on Frame Patch - LH - 4 pc $53.99
46819 65-67 Body on Frame Patch - RH - 4 pc $53.99
25433 63-67 Crossmember - Differential Mounting - w/ Bushing - Removable $559.99
25411 63-67 Crossmember - w/ Differenial Bracket (#3) $509.99
25412 63-67 Crossmember - Over Rear Axle (#4) $387.99
25413 63-67 Crossmember - Rear (#5) $283.99
25410 63-67 Crossmember - Under Transmission (#2) $509.99
36646 63-67 Crossmember Sombrero $38.99
25414 63-64 Frame Assembly - Rear Kick-up w/ Brkts - LH $713.99
25415 63-64 Frame Assembly - Rear Kick-up w/ Brkts - RH $713.99
25420 65-67 Frame Assembly - Rear Kick-up w/ Brkts - LH $724.99
25421 65-67 Frame Assembly - Rear Kick-up w/ Brkts - RH $856.99
37204 64 Frame Corner Gussett - 2 req'd $21.99
34995 65-67 Frame Corner Gussett - LH $23.99
34996 65-67 Frame Corner Gussett - RH $23.99
37206 63-67 Frame Crossmember Cushion Steel Bracket - Welds to Frame - LH $50.99
37207 63-67 Frame Crossmember Cushion Steel Bracket - Welds to Frame - RH $50.99
37208 63-67 Frame Horn - Front Inner - LH $98.99
37209 63-67 Frame Horn - Front Inner - RH $98.99
37210 63-67 Frame Lwr A-Arm Support w/ Gussett - 2 req'd. $142.99
37203 63-67 Frame Side Rail End Cap $13.99
26280 63-64 Frame Side Rail Repair Section - 23" - LH $151.99
26284 65-67 Frame Side Rail Repair Section - 23" - LH $150.99
26281 63-64 Frame Side Rail Repair Section - 23" - RH $151.99
26285 65-67 Frame Side Rail Repair Section - 23" - RH $150.99
26282 63-64 Frame Side Rail Repair Section - 48" - LH $198.99
26286 65-67 Frame Side Rail Repair Section - 48" - LH $197.99
26283 63-64 Frame Side Rail Repair Section - 48" - RH $198.99
26287 65-67 Frame Side Rail Repair Section - 48" - RH $197.99
37205 63-64 Rear Axle Bumper Bracket - Welds to Frame $55.99
36655 64-67 Rear Axle Bumper Brkt - Welds to Frame LH $31.99
36656 64-67 Rear Axle Bumper Brkt - Welds to Frame - RH $50.99

= Shipped by truck freight.

BODY MOUNT KITS

All the correct bolts, nuts, shims, spacers and cushions you need to mount any 1963-67 Corvette body. All components individually packaged and identified for your convenience. Diagrams included.

2662 63 Body Mounting Kit - All $91.99
2664 64 Body Mounting Kit - Convertible $91.99
2666 65-67 Body Mounting Kit - Convertible $91.99
2663 64 Body Mounting Kit - Coupe $91.99
2665 65-67 Body Mounting Kit - Coupe $91.99

BODY MOUNTS

36645 63-67 Access Plate Screw w/ Ext. Lock Washer - 8 pc $6.99
32972 64-67 Body Mount Cage Nuts - pr $6.99
33004 63-67 Body Mount Cage & Nut Kit $17.99
33126 63-67 Body Mount Nut Cage $10.99
K1492 63-67 Body Mount Shim Kit $32.99
33116 63-67 #1 Body Mount Bracket on Firewall $27.99
33118 63 #1 Body Mount Bracket on Frame LH $66.99
33119 63 #1 Body Mount Bracket on Frame RH $66.99
33120 64-67 #1 Body Mount Bracket on Frame LH $60.99
33121 64-67 #1 Body Mount Bracket on Frame RH $60.99
33117 63-67 #1 Body Mount Bracket Reinforcement $14.99
33122 63 #2 Body Mount Bracket on Frame w/ Cage Nut $63.99
33123 64-67 #2 & #3 Body Mount Bracket on Frame w/ Cage Nut - Under Door Sill - Convertible only $39.99
33137 63-67 #3 Body Mount Access Plate $7.99
32684 63-67 #3 Body Mount Access Plate Strip Caulk $7.99
36647 63-67 #3 Body Mount Access Plate U-Nuts - 8 pc $2.99
33124 64-67 #3 Body Mount Bracket on Frame $39.99
33125 63 #3 Body Mount Bracket on Frame w/ Cage Nut $68.99
33127 63 #4 Body Mount Bracket on Frame $55.99
33128 64-67 #4 Body Mount Bracket on Frame $55.99
33129 63 #4 Body Mount Reinforcement - on Body - LH $40.99
33130 63 #4 Body Mount Reinforcement - on Body - RH $40.99
33133 64 #4 Body Mount Reinforc. on Body - Conv - LH $40.99
33134 64 #4 Body Mount Reinforc. on Body - Conv - RH $40.99
33135 65-67 #4 Body Mount Reinforc. on Body - Conv - LH $40.99
33136 65-67 #4 Body Mount Reinforc. on Body - Conv - RH $40.99
33131 64-67 #4 Body Mount Reinforc. on Body - Coupe - LH $40.99
33132 64-67 #4 Body Mount Reinforc. on Body - Coupe - RH $40.99

1963-67 BODY MOUNTS

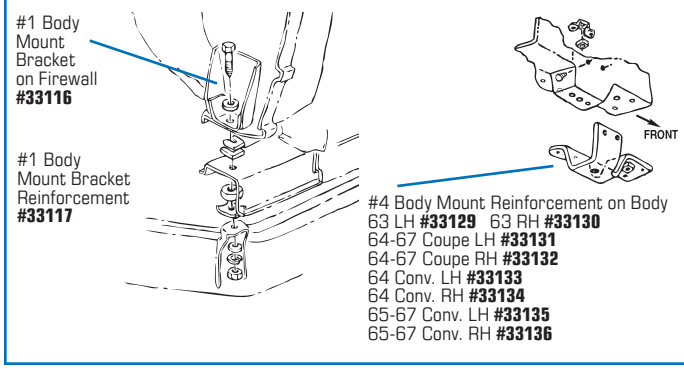

800-458-3475
CorvetteAmerica.com
WARNING: Cancer and Reproductive Harm — www.P65Warnings.ca.gov

#22153 1965 Chassis Restoration Kit

Chassis Restoration Kits

This convenient kit includes stencils, paints, markers, tape and bulletins for 100% correct chassis restoration. Specify vehicle ID number for correct frame stencils.

22151	63	Chassis Restoration Kit	$132.99
22152	64	Chassis Restoration Kit	$132.99
22153	65	Chassis Restoration Kit	$132.99
22154	66	Chassis Restoration Kit	$132.99
22155	67	Chassis Restoration Kit	$132.99

Body Lift Harness

Four heavily tempered body hooks are machine-stitched to heavy-gauge nylon webbing. All straps are sewn directly to a tempered, precision-machined steel center ring. Surpasses any other in strength, safety and durability.

5465	63-67	Body Lift Harness	$98.99

Additional Body Mount Components

K1449	63-67	Body Assembly Rivets - Aluminum - Countersunk Flat Head - 3/16" x 1/2" - 25 pc set	$6.99
36641	63-67	Body Assembly Rivets - Aluminum - Flat Head - 1/2" x 3/8" - 25 pc set	$3.99
K1314	63-67	Body Assembly Rivets - Aluminum - Round Head - 3/16" x 1/2" - 25 pc set	$7.99
46464	64-67	Body Mount Bolt Kit	$19.99
34994	64-67	Body Mount Cushion - Upper	$3.99
35012	64-67	Body Mount Cushion - Lower	$12.99
33740	63-67	Body Mount Cushion Set - Polyurethane	$73.99
34993	63	Body Mount Rubber Blocks - pr	$17.99
33744	63-67	Body Mount Shim - Square Metal	$1.99
34992	63-67	Body Mount Shims - U-Shape - 6 pc set	$12.99
36637	64-67	Body Mount Spacers - Aluminum - Conv - pr	$15.99
32972	63-67	Body Mount Square Nuts - pr	$17.99
33106		Frame & Suspension Paint - Aerosol	$8.99
22176		Frame Paint - Quart	$31.99
22162		Frame Stencil	$30.99

TOP FLIGHT ACCOUNT

For the Corvette owner Restoring a Classic!

Hundreds of customers have taken advantage of the exclusive offers and special pricing by enrolling in Corvette America's Top Flight Program. Whether you work on one car or multiple Corvettes, our Top Flight Program will help you complete your projects.

WARNING: Cancer and Reproductive Harm — www.P65Warnings.ca.gov

Serving the Corvette Community Since 1977.

#X2450 Vented Gas Cap

#28407 Gas Filler Neck - Convertible

#1414 Locking Gas Cap

#28405 Gas Filler Neck - Coupe

#X2259 Gas Filler Neck Boot

#35015 Sending Unit Removal Tool

FILLER NECK & GAS TANK

1414	63-67 Gas Cap - Locking	$40.99
X2450	63-67 Gas Cap - Vented	$26.99
33138	63-67 Gas Cap Gasket - Fiber	$2.99
X2259	63-67 Gas Filler Neck Boot	$22.99
28407	63-67 Gas Filler Neck - Convertible	$98.99
28405	63-67 Gas Filler Neck - Coupe	$98.99
X2563	63-67 Gas Filler Neck Drain Hose	$6.99
28411	63-67 Gas Filler Neck Drain Hose Nipple	$3.99
34721	65-67 Gas Filler Neck Drain Hose Strap - Black	$2.99
34720	63-64 Gas Filler Neck Drain Hose Strap - White	$2.99
28412	63-67 Gas Filler Neck Drain Hose Support Spring	$4.99
28408	63-67 Gas Filler Neck to Tank Cork Gasket	$3.99
28409	63-67 Gas Filler Neck to Tank Screws - 9 pc set	$9.99
49933	63-67 Gas Line Fitting - to Fuel Pump	$6.99
X2627	63-67 Gas Tank Sending Unit w/ Strainer & Gasket	$61.99
29800	63-67 Gas Tank Sending Unit Gasket	$2.99
35015	63-67 Gas Tank Sending Unit Removal Tool	$26.99
29801	63-67 Gas Tank Sending Unit Retaining Nut	$3.99
33139	63-67 Gas Tank Sending Unit Strainer	$8.99
1416	63-67 Gas Tank Straps - pr	$28.99
28413	63-67 Gas Tank Strap Anti-Squeak Pads - pr	$5.99
28414	63-67 Gas Tank Strap Guide	$10.99
28415	63-67 Gas Tank Strap Guide Bolt & Nut Kit	$4.99
28420	63-67 Gas Tank Strap Guides	$16.99
42260	63 Gas Tank Support Rail	$202.99
42261	64-67 Gas Tank Support Rail	$197.99
42262	63-67 Gas Tank Support Rail Bolt Set	$5.99

#42953 Gas Tank with O.L.A. Logo

#43313 Gas Tank without O.L.A. Logo

GAS TANKS

42953	63-67 Gas Tank w/ O.L.A. Logo - Includes Filler Neck Gasket, Screws, Sending Unit Lock Ring and Retaining Clip	$274.99
43313	63-67 Gas Tank w/o O.L.A. Logo - Includes Filler Neck Gasket, Screws, Sending Unit Lock Ring and Retaining Clip	$184.99

#X2627 Gas Tank Sending Unit

#1416 1963-67 Gas Tank Straps

GAS GUARDS

Protect your car from scratches and drips with the easy-to-install Gas Guard! Simply install the fuel-resistant black guard over the filler neck and fold over the cap when closed.

41877 63-67 Gas Guard $5.99

800-458-3475
CorvetteAmerica.com

WARNING: Cancer and Reproductive Harm — www.P65Warnings.ca.gov

Save Time & Money with Corvette America's Fuel Tank Kit!

***Corvette America's Fuel Tank Kit** includes:*
Gas Tank, Sending Unit, Gas Tank Straps, Filler Neck Boot, Screw Set, Cork Gasket, Sending Unit Lock Ring, Retaining Cam, Overflow Hose & Hose Nipple.

43211 63-67 Gas Tank Kit **$236.99**

1963-67 FUEL TANK FILLER NECK

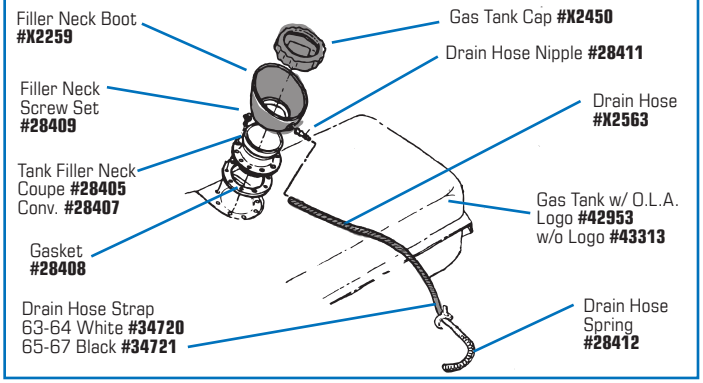

1963-67 FUEL TANK

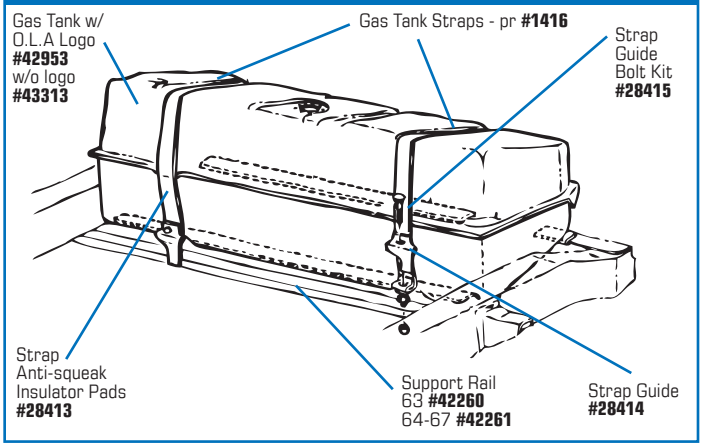

Product photos, descriptions and diagrams at:
www.CorvetteAmerica.com

#9991 1966 L88 Stainless Steel Pump to Carburetor Gas Line

#9989 1965 Stainless Steel Pump to Carburetor Gas Line

Fuel Lines - Steel as Original

These fuel lines are original equipment featuring TBW (Tinned Bundy Weld) or stainless steel tubing with double inverted flares and steel nuts, pre-bent to original shape.

Tank to Pump - TBW Steel

8189	63-67 327	**$52.99**
8190	65-67 396, 427	**$52.99**
8191	63-66 Flex Hose to Fuel Pump Line - 250 / 300 hp	**$26.99**

Pump to Carburetor - TBW Steel

8166	63	340 hp	**$37.99**	**8169**	66	350 hp	**$31.99**
8113	63-65	FI	**$37.99**	**8170**	66	390 hp	**$43.99**
1591	63-65	250 hp	**$20.99**	**8171**	66	425 hp	**$58.99**
8165	63-65	300 hp	**$53.99**	**8172**	67	300 hp	**$24.99**
8167	64-65	350,365 hp	**$24.99**	**8173**	67	350 hp	**$26.99**
8114	65	425 hp	**$84.99**	**8174**	67	390 hp	**$20.99**
8168	66	300 hp	**$24.99**	**8175**	67	400,435 hp	**$100.99**
8144	66	300 hp Chrome	**$42.99**	**8149**	67	L-88	**$47.99**

Tank to Pump - Stainless Steel

9872	63-67 327	**$70.99**
9873	65-67 396, 427	**$70.99**
9874	63-66 Flex Hose to Fuel Pump Line - 250 / 300 hp	**$32.99**

Pump to Carburetor - Stainless Steel

9633	63	340 hp	**$87.99**	**9835**	66	390 hp	**$46.99**
9988	63-65	FI	**$50.99**	**9836**	66	425 hp	**$65.99**
9632	63-65	250 hp	**$40.99**	**9837**	67	300 hp	**$32.99**
9830	63-65	300 hp	**$56.99**	**9838**	67	350 hp	**$48.99**
9703	64-65	350, 365 hp	**$83.99**	**9839**	67	390 hp	**$56.99**
9989	65	425 hp	**$85.99**	**9840**	67	400, 435 hp	**$100.99**
9990	66	300 hp	**$42.99**	**9992**	67	L-88	**$67.99**
9991	66	350 hp	**$42.99**				

Look for our name on the box!

We provide many of our products to other Corvette parts suppliers.

#38550 1966 Fuel Line "Y" Block Connector - 425 hp

FUEL LINE HOSE KITS & RELATED

Hose kits feature authentic nitrile rubber compound & raised rib design like the GM originals.

37230	63-67	Fuel Line Bushing in Frame - Plastic	$2.99
23173	63-65	Fuel Line Fitting - Chrome - 1/8" x 5/16" - 90°	$9.99
23174	63-65	Fuel Line Fitting - Chrome - 1/4" x 5/16" Straight	$9.99
23172	64-65	Fuel Line Fitting - Chrome - 1/8" x 90° w/ Nipple	$11.99
27591	63-67	Fuel Line Clip Bolts - 4 pc - 2 req'd	$3.99
22688	63-67	Fuel Line Clip - Rear	$7.99
37231	63-64	Fuel Line Hose Clamps - AFB or FI - set	$9.99
K1391	65	Fuel Line Hose Clamps - AFB or FI - set	$5.99
37233	64	Fuel Line Hose Clamps - Holley - set	$15.99
K1392	65	Fuel Line Hose Clamps - Holley - set	$5.99
K1390	66-67	Fuel Line Hose Clamps - All Exc. 3x2 - set	$5.99
37236	67	Fuel Line Hose Clamps - 3x2 - set	$11.99
37228	63-67	Fuel Line Loom - Tank to Pump Line - Rear	$7.99
8188	66-67	Fuel Line "Y" Block	$23.99
44970	63-66	Gas Line Clips - 8 pc	$6.99
44971	67	Gas Line Clips - 4 pc	$7.99
8141	63-65	Gas & Brake Line Clamp Set - 19 pc	$24.99
8142	66	Gas & Brake Line Clamp Set - 18 pc	$24.99
8143	67	Gas & Brake Line Clamp Set - 18 pc	$24.99

1963-67 FUEL SUPPLY

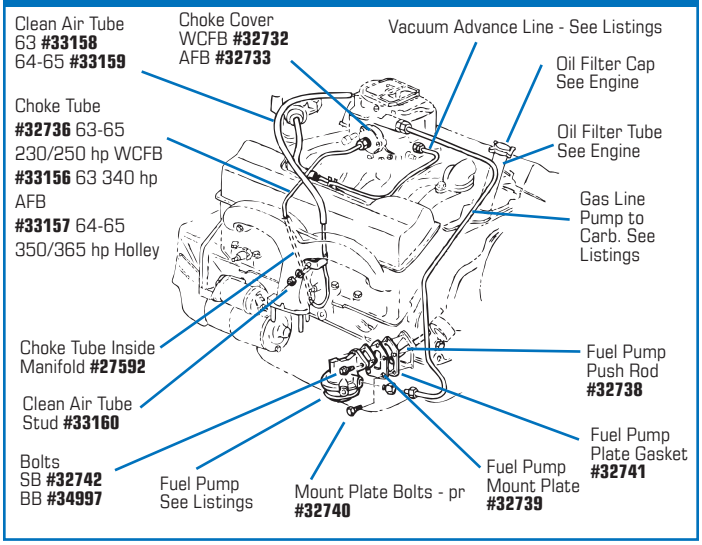

CHOKE

37213	64-65	Choke Base - Holley - 2818 & 3124	$69.99
33158	63-65	Choke Clean Air Tube - 63 All, 64-65 FI	$43.99
33159	64-65	Choke Clean Air Tube - Exc. FI	$33.99
37216	65	Choke Clean Air Tube - Lower - 396	$39.99
35000	65	Choke Clean Air Tube Clip - 396	$16.99
35008	63-65	Choke Clean Air Tube Hose	$2.99
33160	63-65	Choke Clean Air Tube Stud to Manifold	$6.99
32733	63-65	Choke Cover - AFB	$61.99
32732	63-65	Choke Cover - WCFB 1x4	$61.99
35003	63-65	Choke Cover Gasket - WCFB & AFB	$2.99
33153	63-65	Choke Cover Retainer & Screw Kit - WCFB	$8.99
35001	63-65	Choke Cover Screws - WCFB & AFB - 3 pc set	$2.99
37211	64-65	Choke Housing Cover - Black - Holley - 350 / 365 hp	$46.99
K1380	63-65	Choke Housing Mounting Screws - WCFB - 3 pc	$1.99
35005	63-65	Choke Housing Mounting Screws - AFB - 3 pc	$2.99
33154	63-65	Choke Internal Disc w/ Retainer & Spring-Carter	$70.99
35539	63-65	Choke Internal Spring - WCFB 1x4	$21.99
35006	63-65	Choke Rod & Clip - WCFB	$9.99
35007	63-65	Choke Rod & Clips - AFB	$9.99
33161	66-67	Choke Rod - 327 w/ Aluminum Intake	$7.99
33162	66-67	Choke Rod - 300 hp	$7.99
33164	66	Choke Rod - 390 hp	$7.99
33166	66	Choke Rod - 425 hp	$7.99
33163	67	Choke Rod - 3x2	$7.99
33165	67	Choke Rod - 390 hp	$7.99
33167	66-67	Choke Rod Clip	$1.99
35002	63-65	Choke Slotted Plate - WCFB & AFB	$10.99
33168	66-67	Choke Spring	$23.99
33170	66-67	Choke Spring Cover	$5.99
33169	66-67	Choke Spring Mount Screw	$1.99
42268	64-65	Choke Thermostat - 350 / 365 hp & 396	$55.99
42269	64-65	Choke Thermostat Retainer Set - 350 / 365 hp	$9.99
42265	63-65	Choke Tube - FI Chrome	$26.99
33156	63	Choke Tube - Chrome - 340 AFB	$38.99
33157	64-65	Choke Tube - Chrome - Holley 350 / 365 hp	$19.99
27592	63-65	Choke Tube in Exhaust Manifold - SS	$18.99
37214	65	Choke Tube w/ Loom - Upper - 396	$36.99
32736	63-65	Choke Tube - WCFB - 230, 250, 300 hp - Bottom	$14.99

1963-67 CHOKE

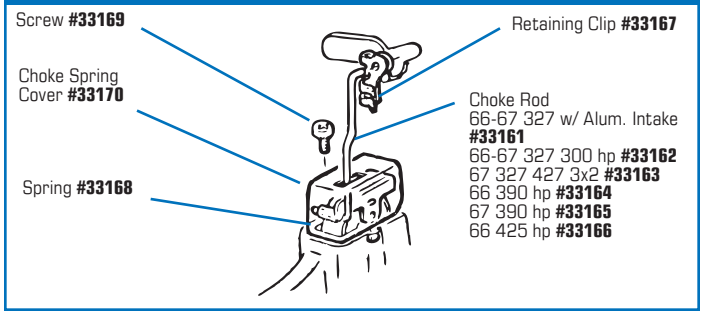

Corvette America's INTERIOR Package THE ORIGINAL

Call Today & SAVE on a NEW Interior Package!

Get discounts on Interiors & Parts when you order an Interior Package!

800-458-3475
CorvetteAmerica.com

WARNING: Cancer and Reproductive Harm — www.P65Warnings.ca.gov

Fuel Filters, Pumps & Related

27666 63-67 Fuel Filter - Carb Inlet Bronze Mesh - 63-65 AFB / WCFB, 64-67 Holley $3.99
1727 63-65 Fuel Filter - GF-90 - Black w/ White Letters..... $53.99
1725 63-65 Fuel Filter - GF-90 - Silver Finish $27.99
44206 63-65 Fuel Filter - GF-90 - Silver w/ Red Letters $70.99
1726 65 Fuel Filter - GF-416 - 425 hp $60.99
1740 63-65 Fuel Filter Bracket - 300 hp GF-90 w/ Stud $16.99
1741 63-65 Fuel Filter Bracket - Chrome - 340, 350, 360, 365 & 375 hp GF-90 w/ Mounting Stud..... $18.99
27411 63-65 Fuel Filter Bracket Mount Stud - GF90 ..... $2.99
43734 63-65 Fuel Float Lever - FI Brass..... $15.99
37218 63-66 Fuel Pump - Rebuilt Original - AC #4657 - 63 All, 64-66 250-300 hp $182.99
37219 64-66 Fuel Pump - Rebuilt Original - #40083 64-65 350-375 hp, 66 350 hp $284.99
0876 63-66 Fuel Pump - 63 all, 64-65 250/300 hp - Repl. $87.99
0877 64-66 Fuel Pump - 64-65 hp & FI - Replacement $99.99
37222 65-66 Fuel Pump 396 / 427 #40366 Round - 65L-66E $346.99
37223 66 Fuel Pump - 427 #40366 - Square Inlet - 66L.. $295.99
0878 67 Fuel Pump - 327 - Replacement..... $45.99
36687 67 Fuel Pump - 427 - #40482 - 3x2, L88 Correct $248.99
40672 67 Fuel Pump - 3x2, L88 - Replacement $48.99
32742 63-67 Fuel Pump Bolts - 327 - pr..... $3.99
34997 65-67 Fuel Pump Bolts - 396 / 427 - pr..... $3.99
33141 63-67 Fuel Pump Gasket..... $2.99
37226 64-66 Fuel Pump Inlet Elbow - 327 / 340-375 hp $14.99
37227 64-66 Fuel Pump Inlet Hose w/ Fitting & Clamps - 327 / 340 - 375 hp..... $9.99
32739 63-67 Fuel Pump Mount Plate $9.99
32740 63-67 Fuel Pump Mount Plate Bolts - pr $3.99
32741 63-67 Fuel Pump Mount Plate Gasket $2.99
32738 63-67 Fuel Pump Push Rod $14.99
34998 65 Plug in Block Under Fuel Pump - 396..... $10.99
34999 66-67 Plug in Block Under Fuel Pump - 427..... $2.99

Accelerator Linkage

31084 64-65 Accelerator Arm at Firewall - 327 exc. 300 hp ... $43.99
31085 64-65 Accelerator Arm at Firewall - 300 hp..... $43.99
31086 65-67 Accelerator Arm at Firewall - 65 396, 66 390, 425 hp 4-Spd, 66-67 327 ..... $43.99
31087 67 Accelerator Arm at Firewall - 390/435 hp 4-Spd $43.99
35014 63-67 Accelerator Arm Bolt / Nut / Washer Kit..... $2.99
37215 63-67 Accelerator Lever Ground Strap $7.99
27656 63 Accelerator Return Spring - 340 hp..... $7.99
31075 63-65 Accelerator Return Spring - FI..... $7.99
31074 63-67 Accelerator Return Spring - 327 ..... $4.99
31078 65-67 Accelerator Return Spring - 396 / 427 ..... $4.99
31076 67 Accelerator Return Springs - 327 Auto - pr..... $11.99
42270 63-65 Accelerator Return Spring Bracket - FI..... $16.99
27660 63-67 Accelerator Return Spring Bracket - 327 ..... $7.99
31077 65-67 Accelerator Return Spring Bracket - 396 / 427 .. $10.99
31088 63-65 Accelerator Rod - Correct Exc. FI & 396 ..... $17.99
35009 63-65 Accelerator Rod - FI..... $32.99
31090 65 Accelerator Rod - 396 / 425 hp $28.99
31089 66-67 Accelerator Rod - all 327..... $17.99
31091 66 Accelerator Rod - 425 hp..... $28.99
31092 66-67 Accelerator Rod - 390 hp - 66 All, 67 4 spd..... $28.99
31093 67 Accelerator Rod - 400 hp 4-spd & 435 hp All..... $28.99
35010 67 Accelerator Rod - 427 / 390 Auto..... $34.99
35011 67 Accelerator Rod - 427 / 400 Auto..... $34.99
31094 63-67 Accelerator Rod Bushing w/ Insert - pr..... $6.99
27663 63-67 Accelerator Rod Installation Kit - Includes: 2 grommets, swivel, washer & cotter pin $7.99
31095 63-67 Accelerator Rod Swivel $3.99
25562 63-67 Carburetor Linkage Bushing $2.99
25563 63-67 Carburetor Linkage Bushings - 10 pc..... $26.99
31096 67 Carburetor Linkage Set - 3X2..... $51.99

Accelerator Pedal / Control

31082 63 Accelerator Firewall Bracket Seal $2.99
1562 63-67 Accelerator Pedal..... $19.99
K1207 63-67 Accelerator Pedal Screws - pr..... $2.99
35013 63-67 Accelerator Pedal Spacer..... $5.99
K1398 63-67 Accelerator Pedal Swivel Bolt & Washer Kit..... $1.99
31079 63 Accelerator Pedal Swivel Rod $54.99
42278 63-67 Accelerator Pedal Swivel Rod Bushings - pr $1.99
31081 63-67 Accelerator Pedal Swivel & Support Assembly $40.99
37237 63 Accelerator Pedal Underbody Nut Plate..... $9.99
33082 64-67 Accelerator Pedal Underbody Nut Plate..... $16.99
31109 63-67 Accelerator Rod Bushings w/ Insert $3.99

1963-67 ACCELERATOR PEDAL/CONTROL

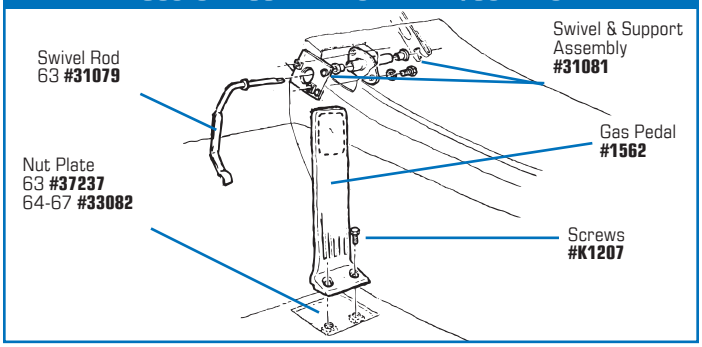

1963-67 ACCELERATOR LINKAGE

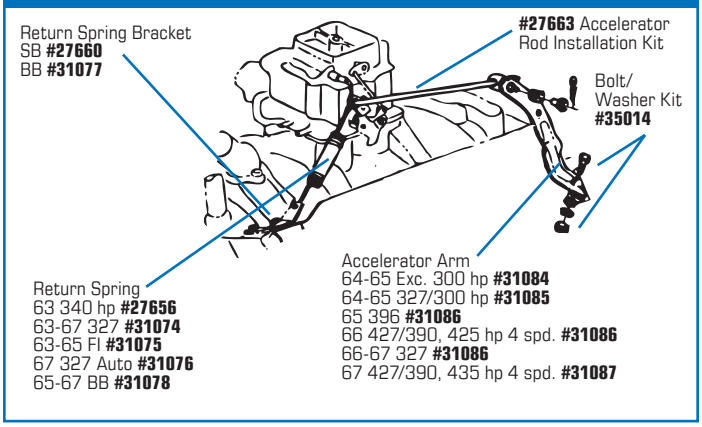

Discounts & Coupons Emailed!
Enter your email address on CorvetteAmerica.com

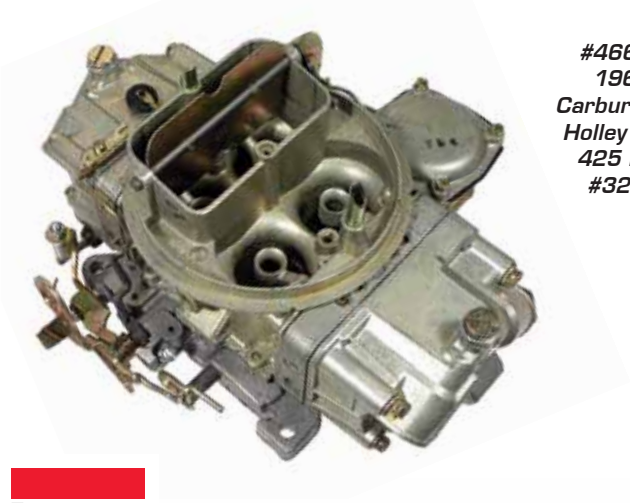

#46628 1966 Carburetor - Holley 427, 425 hp - #3247

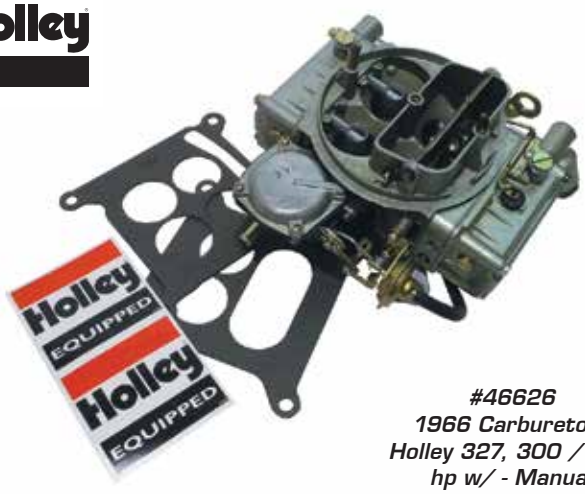

#46626 1966 Carburetor - Holley 327, 300 / 350 hp w/ - Manual

33150	66-67	Carb Base Gasket - 300 hp & 390 hp	$4.99
50748	67	Carb Base Gasket - 3x2	$2.99
33152	67	Carb Base Gaskets - 3x2 set of 3	$7.99
42271	63	Carburetor ID Tag - 3501S 250 hp	$15.99
42274	64-65	Carburetor ID Tag - 3697S 250 hp	$16.99
42276	64-67	Carburetor Inlet Fitting - 327 Holley 5/16 Line	$11.99
42277	66-67	Carburetor Inlet Fitting - 427 3/8" Line	$9.99
35538	63-65	Carb Inlet Fitting - AFB - 3/4 Hex Brass	$10.99
33147	63-65	Carb Insulator Spacer - 300 hp	$31.99
K1250	63-67	Carb to Intake Mounting Stud w/ Nut Kit - Except 63-65 300 hp	$6.99
K1249	63-65	Carb to Intake Mount Stud & Nut Kit 300 & 340 hp	$6.99
33145	67	Carb To Intake Mounting Stud & Nut Kit - 3x2	$13.99
33143	64-65	Crankcase Vent Hose Fitting - Holley	$19.99
43734	63-65	Fuel Float Lever - FI - Brass	$15.99
33142	64-65	PCV Vacuum Restriction Fitting AFB, WCFB & FI	$18.99

#27645 1963-65 Carburetor Kit

CARBURETOR & RELATED

46626	66	Carburetor - Holley 327, 300 / 350 hp w/ Man	$897.99
46627	66	Carburetor - Holley 427, 390 hp All #3370	$789.99
46628	66	Carburetor - Holley 427, 425 hp, #3247	$774.99
46629	67	Carburetor - Holley 327, 300 / 350 hp w/ Man	$805.99
46631	67	Carburetor - Holley 327, 3x2, Center #3660	$713.99
46630	67	Carburetor - Holley 427, 3x2, Outer #3659	$509.99
25800	64-65	Carburetor Kit - Holley - #2818 hp - SB	$60.99
25801	65	Carburetor Kit - Holley - #3124 hp - BB	$62.99
25802	66	Carburetor Kit - Holley - #3367 STD - SB	$53.99
25803	66	Carburetor Kit - Holley - #3370 STD - SB	$53.99
25804	66	Carburetor Kit - Holley - #3247 hp - BB	$63.99
25805	67	Carburetor Kit - Holley - #3659 hp 3x2 - BB	$46.99
25806	67	Carburetor Kit - Holley - #3660 hp 3x2 - BB	$54.99
25807	67	Carburetor Kit - Holley - #3810 hp - SB	$54.99
25808	67	Carburetor Kit - Holley - #3811 hp - SB	$54.99
25809	67	Carburetor Kit - Holley - #3815 hp - BB	$54.99
27645	63-65	Carburetor Kit - AFB	$55.99
27644	63-65	Carburetor Kit - WCFB	$40.99
33146	63-65	Carb Baffle Plate - 300 hp - Stainless Steel	$11.99
33151	66-67	Carb Baffle Plate - 300 / 390 hp - Stainless Steel	$16.99
32729	63-65	Carb Base Gasket - 250 hp	$3.99
32730	63-65	Carb Base Gasket - 300 hp	$7.99
32731	63	Carb Base Gasket - 340 hp	$12.99
33148	64-67	Carb Base Gasket - 350 / 365 hp	$8.99
33149	65-67	Carb Base Gasket - 65 425 hp, 66 425 / 450 hp, 67 L88	$7.99

#31103 1966-67 Chrome 350 hp Vacuum Advance Line

#31105 1967 Chrome 400/435 hp Vacuum Advance Line

VACUUM ADVANCE LINES

31097	63-65	Vacuum Advance Line - Steel 250 / 300 hp	$17.99
31099	63	Vacuum Advance Line - Chrome 340 hp	$32.99
31100	64-65	Vacuum Advance Line - Chrome 350 / 365 hp	$36.99
31101	65	Vacuum Advance Line - Steel 396 / 425 hp	$19.99
31102	66-67	Vacuum Advance Line - Steel 300 hp	$24.99
31103	66-67	Vacuum Advance Line - Chrome 350 hp	$22.99
31104	66-67	Vacuum Advance Line - Steel 390 / 425 hp	$29.99
31105	67	Vacuum Advance Line - Chrome 400 / 435 hp	$30.99
31106	63-67	Vacuum Advance Line Clip on Intake	$3.99
31107	63-67	Vacuum Advance Line Hose w/ White Stripe	$3.99
42264	67	Vacuum Hose & "T" Kit - 427 3x2"	$10.99

800-458-3475
CorvetteAmerica.com
WARNING: Cancer and Reproductive Harm — www.P65Warnings.ca.gov

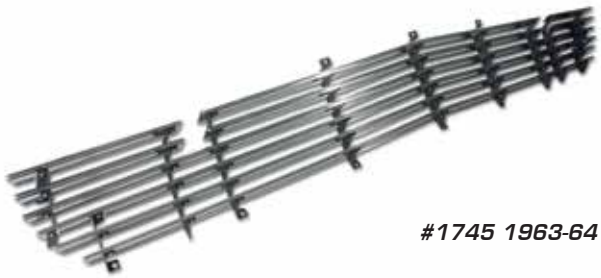

#1745 1963-64 Grille

#1751 1965 Grille

#9052 1966-67 Grille

#1027 1963-64 Lower Center Grille Molding

1963-64 GRILLE MOLDINGS

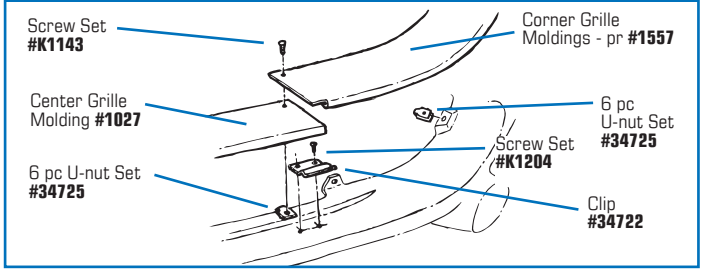

1965-67 GRILLE

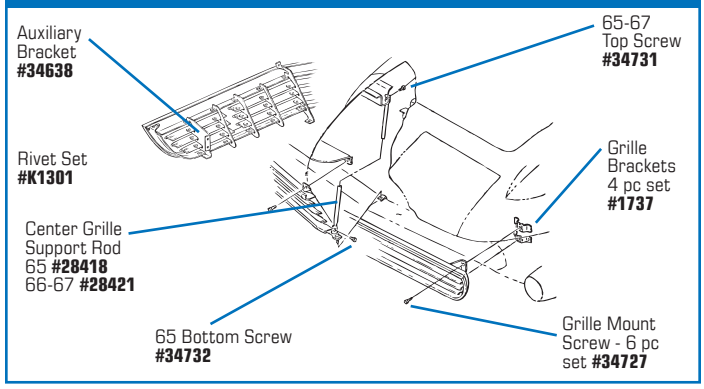

#1557 1963-64 Grille Moldings - Lower Corners

#1737 1965-67 Grille Brackets

#28417 1963-64 Grille Brackets

GRILLE & COMPONENTS

34638	66-67 Auxilliary Grille Bracket - 2 req'd	$9.99
K1301	66-67 Auxilliary Grille Bracket Rivet Set - 4 pc set	$1.99
28418	65 Center Grille Support Rod	$18.99
28421	66-67 Center Grille Support Rod	$19.99
34732	65 Center Grille Support Rod Screw - Lower	$2.99
34731	65-67 Center Grille Support Rod Screw - Upper	$1.99
1745	63-64 Grille	$376.99
1751	65 Grille	$533.99
9052	66-67 Grille	$1138.99
28417	63-64 Grille Bracket w/ Mount Kit - 12 pc set	$15.99
34729	65-67 Grille Bracket Rivets - 8 pc	$1.99
1737	65-67 Grille Brackets - 4 pc set	$16.99
K1041	63-64 Grille J-Nuts - 10 pc set	$6.99
1027	63-64 Grille Molding - Lower Center	$89.99
1557	63-64 Grille Moldings - Lower Corners - pr	$111.99
28416	63-64 Grille Molding Mounting Kit - 27 pc	$21.99
K1143	63-64 Grille Molding Screws - 6 pc set	$3.99
34725	63-64 Grille Molding U-Nuts - 6 pc set	$2.99
34726	63-64 Grille Mount Screws - 12 pc set	$8.99
34727	65-67 Grille Mount Screws - 6 pc set	$4.99
34722	63-64 Grille Molding Clip - 5 req'd	$4.99
K1204	63-64 Grille Molding Clip Screws - 10 pc set	$3.99

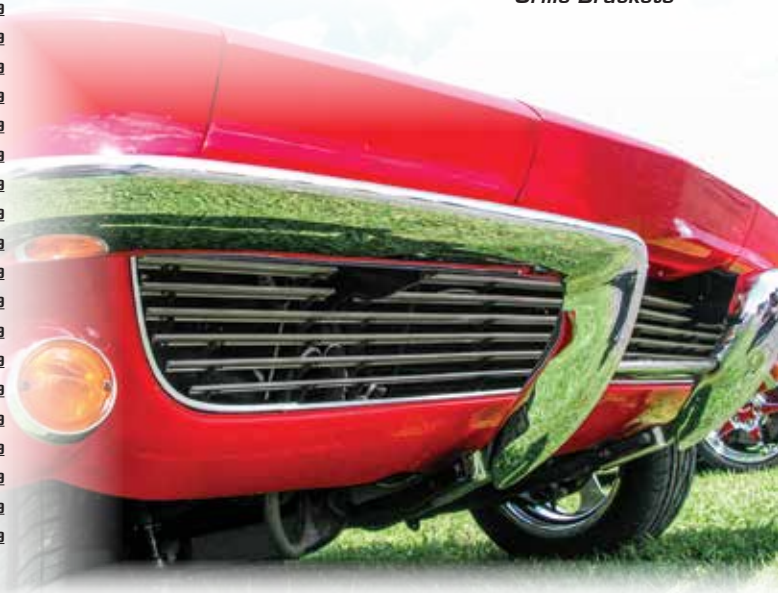

WARNING: Cancer and Reproductive Harm — www.P65Warnings.ca.gov

HARDTOP STORAGE CART

This easy-to-use cart is the perfect way to store your Corvette's hardtop or roof panel when it's not in use. Sturdy aluminum construction and padded contact points offer stable and safe support, and the best part is you can roll it around the garage on four swivel casters. Some assembly required. Instructions included.

51000 63-67 Hardtop Storage Cart $159.99

HARDTOP HOIST HAND WINCH

The Hoist Hand Winch, with its ratchet mechanism, 600 lb. capacity, and comfortable handle allows you to hoist your hardtop and manage the extra rope with ease.

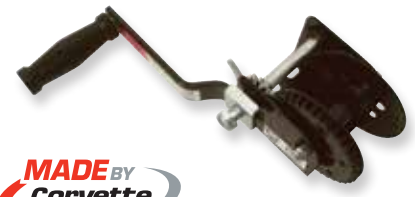

X2585 Hardtop Hoist Hand Winch $18.99

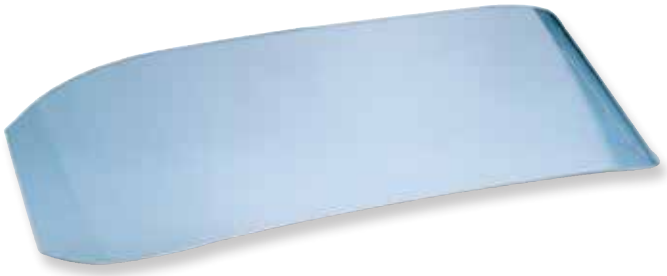

HARDTOP REAR WINDOWS

Constructed of crystal-clear plexiglass like the original.
Additional packaging charges apply.

0797 63-67 Hardtop Rear Window $407.99

FLANNEL HARDTOP COVER

Our flannel Hardtop Cover protects the inside & outside of your hardtop like a security blanket during storage.

Cover simply drapes over hardtop to provide protection & easy use.

26584 63-67 Premium Flannel Hardtop Cover $40.99

DECK PROTECTORS

Prevent scratches by covering the area where your top comes in contact with your rear deck. Made of static-cling film, they require no adhesives and they're die-cut specifically for your model year!

21544 Softtop - Clear
21545 Softtop - Black
21546 Hardtop - Clear
21547 Hardtop - Black

1963-1967 Deck Protector $27.99

800-458-3475
CorvetteAmerica.com

WARNING: Cancer and Reproductive Harm — www.P65Warnings.ca.gov

#X2506 Softtop/Hardtop Header Latch Plates

#1163 & #1164 Hardtop Header Latches

Hardtop Repair Kits

Make your original hardtop look new again with complete and accurate Hardtop Repair Kits for 1963-1967 Corvettes.
When ordering: Give either your V.I.N. or year and month of production or ask your sales representative to assist you with these numbers. Also, indicate headliner color.
Note: Weatherstrip not included.

1963-1967 Hardtop Repair Kits contain:

- 1 Rear Window - Dated
- Rear Window Lower Molding Retainer Clips
- Rear Window Upper Molding Retainer Clips
- 1 Headliner - cloth for 63-65, vinyl for 66-67
- Header Weatherstrip Retainer Clips • Screw Kit

40417 63-65 Hardtop Repair Kit $764.99
40418 66-67 Hardtop Repair Kit $764.99

Hardtop Mounting Kits

42540 63-67 Hardtop Mount Kit - Deluxe - 18 pc - 2 rear bolts, 2 bumper tips, 2 plug buttons, 2 ferrules, 2 gaskets, 2 side bolts w/ washers, 2 side nuts, 2 nut gaskets & 2 jamb nuts $45.99
8101 63-67 Hardtop Mount Kit - Basic - 8 pc - 2 rear bolts, 2 ferrules, 2 side bolts & 2 nuts..... $37.99

#33180 Hardtop Rear Molding Retaining Clip Set

Hardtop Hardware

X2506 63-67 Hardtop / Softtop Header Latch Plates - pr $40.99
33181 63-67 Hardtop Header Guide Pins - pr $40.99
1722 63-67 Hardtop Header Guide Pin Bushings - pr..... $4.99
K1284 63-67 Hardtop Header Guide Pin Mount Screws - pr..... $1.99
1163 63-67 Hardtop Header Latch - LH $121.99
1164 63-67 Hardtop Header Latch - RH $121.99
23541 63-67 Hardtop Header Latch Backplate Screws - 4 pc $6.99
K1369 63-67 Hardtop Header Trim Screw Set $2.99
1165 63-67 Hardtop Rear Bolts - pr $5.99
33184 63-67 Hardtop Rear Bolt Bracket - LH $28.99
33185 63-67 Hardtop Rear Bolt Bracket - RH..... $28.99
36699 63-67 Hardtop Rear Bolt Bumper Tips - pr..... $2.99
K1247 63-67 Hardtop Rear Bolt Nuts & Washers - 4 pc set $1.99
36700 63-67 Hardtop Rear Bolt Rubber Washer $0.99
33183 63-67 Hardtop Rear Bolt Spring Retainer..... $13.99
1166 63-67 Hardtop Rear Ferrule - 2 req'd $4.99
31111 63-67 Hardtop Rear Ferrule Gaskets - pr..... $1.99
33178 63-67 Hardtop Rear Molding Retaining Clip - Lower $10.99
33180 63-67 Hardtop Rear Molding Retaining Clip Set - Upper - 12 pc set..... $92.99
33406 63-67 Hardtop Rear Molding & Wstrip Screw Set - Lower. $8.99
35020 64-67 Hardtop Rear Window Reinforc. - Inner Lower ... $21.99
35021 64-67 Hardtop Rear Window Reinforc. - Inner Upper $21.99
35019 64-67 Hardtop Rear Window Screw Reinforc. - Outer -pr $13.99
33177 63-67 Hardtop Rear Window Spanner Screw & Nut $16.99
35018 64-67 Hardtop Rear Window Spanner Screw Wrench ... $10.99
31112 63-67 Hardtop Rear Ferrule Plug Buttons - pr..... $2.99
0118 63-67 Hardtop Side Bolts - pr $9.99
33182 63-67 Hardtop Side Mount Brackets - Weld-On - pr..... $29.99
0119 63-67 Hardtop Side Nut - 2 req'd $4.99
31110 63-67 Hardtop Side Nut Gaskets - pr..... $1.99
K1276 63-67 Hardtop Side Nut Jamb Nuts - pr $1.99
20686 63-67 Hardtop Wrench $29.99

WARNING: Cancer and Reproductive Harm — www.P65Warnings.ca.gov

1963-67 HARDTOP HEADER LATCHES

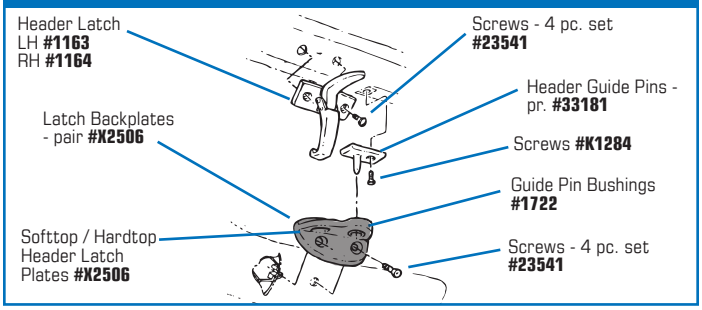

1963-67 HARDTOP MOUNTING BOLTS

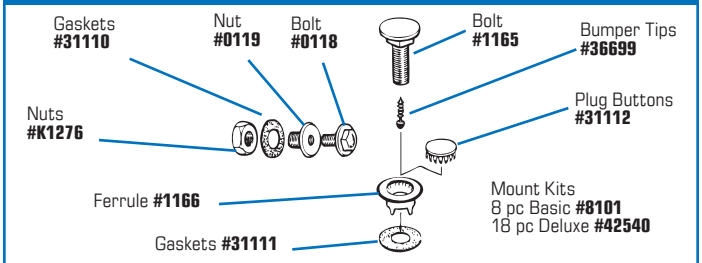

1963-67 HARDTOP REAR WINDOW MOLDINGS

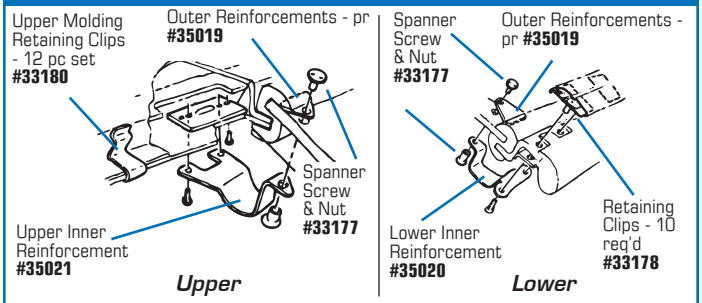

TOP FLIGHT ACCOUNT

Corvette America is pleased to present the Top Flight Account Program. The Top Flight Account Program is designed for the Corvette owner doing a major rebuild or restoration on their Corvette, or for someone who owns and/or works on multiple Corvettes.

HEATER, AC & VENTILATION

HEATER

34346	63-67	Aero-Rivet Tool	$96.99
35057	63-67	Blower Motor Screw & Terminal Set	$5.99
32982	63-67	Bypass Hose Fitting in Intake - 327 w/ HP	$8.99
34897	65-67	Bypass Hose Fitting - Water Pump & Intake - 396 / 427 - Unthreaded	$4.99
31166	63-67	Defroster Duct - Underdash	$192.99
51286	63	Heater / AC Blower Motor Adaptor Lead	$15.99
33195	63-67	Heater Blower Motor	$54.99
33176	63-67	Heater Blower Motor Resistor	$23.99
52628	63-67	Heater Blower Motor Resistor w/ CAC	$28.99
33194	63-67	Heater Blower Motor Wheel	$42.99
30052	63-67	Heater Blower Switch	$111.99
31164	63-67	Heater Box to Firewall Stud Set - w/o AC	$19.99
31165	63-67	Heater Box to Firewall Stud Set - w/ AC	$9.99
35055	63-67	Heater Box Gasket Kit - w/ AC	$39.99
0002	63-67	Heater Box Rebuild Kit - w/o AC	$27.99
42302	63-67	Heater Box Resistor Plug	$5.99
K1420	63-67	Heater Cable to Heater Box Screws - pr	$1.99
35067	63-67	Heater Cable / WW Switch Nut Wrench	$13.99
1179	63-67	Heater Core - w/o AC	$128.99
1205	63-67	Heater Core - w/ AC	$147.99
31163	63-67	Heater Core Firewall Mounting Plate - w/o AC	$96.99
35058	63-67	Heater Core Straps w/ AC - pr	$22.99
35059	63-67	Heater Core Straps w/o AC - pr	$22.99
K1356	63-67	Heater Core Strap Screws - 4 pc set	$2.99
35049	63-67	Heater Cover Plate w/ AC	$56.99
42311	63-67	Heater Delete Plates - pr	$157.99
42312	63-67	Heater Delete Plate Gasket Set	$26.99
42313	63-67	Heater Delete Plate Screw Set	$9.99
40115	63-67	Heater Hoses - w/o Logo	$28.99
40121	63-67	Heater Hoses - w/ GM Logo	$47.99
33191	63	Heater Hose Bracket on AC Compressor	$14.99
33192	64-67	Heater Hose Bracket on AC Compressor - 327	$26.99
33193	66-67	Heater Hose Bracket on AC Compressor - 427	$37.99
33188	63-65	Heater Hose Bracket on Alternator	$14.99
K1337	63-67	Heater Hose Clamps - Spring Ring - 5/8"- pr	$1.99
K1421	63-67	Heater Hose Clamps - Spring Ring - 3/4" - pr	$2.99
35362		Hose Clamp Pliers for Spring Ring Clamps	$30.99
33190	64-67	Heater Hose To Inner Fender Clamp 64-67 w/ AC 2 Req'd, 66-67 427 w/o AC 1 Req'd	$11.99
27388	63-67	Heater Hose Fitting on Intake - 1/2"	$7.99
32984	63-67	Heater Hose Fitting in Water Pump - w/o AC	$10.99
32985	63-67	Heater Hose Fitting in Water Pump - 327 w/ AC	$10.99
37012	66-67	Heater Hose Fitting in Water Pump - 427 w/ AC	$6.99
27390	63-67	Heater Hose Fitting Adapter - NPT - 3/4"-1/2"	$6.99
42299	63	Heater Hose Pipe - w/ AC by Compressor	$30.99
33210	64-66	Heater Hose Pipe w/ AC by Comp. - Stainless	$30.99
34903	64-67	Heater Hose Retainers w/o AC - pr	$8.99
28422	63-67	Heater Hose Water "T" Fitting	$11.99
31016	64-67	Heater Y-Duct at Floor	$234.99
37252	63-67	Heater Y-Duct Screws - 3 pc set	$1.99
41030	63-67	Heater / Water Shut Off Control Valve	$33.99
33212	63-67	Heater Water Control Valve Bracket w/ AC	$13.99
35042	63-67	Heater Water Control Valve Bracket Screw	$0.99
35043	63-67	Heater Water Control Valve Clip	$4.99
42306	63-67	Inner Heater Box Bolt Plate, Nut & Rivet Set	$6.99
31162	63-67	Outer Heater Cover Nut Set - 8 pc	$5.99
35052	63-67	Outer Heater Cover Nuts w/ AC - 9 pc	$2.99
34595	63-67	Water Pump Bypass Hose - 327 hp	$7.99
33187	65-67	Water Pump Bypass Hose - 396 / 427	$6.99

800-458-3475
CorvetteAmerica.com
WARNING: Cancer and Reproductive Harm — www.P65Warnings.ca.gov

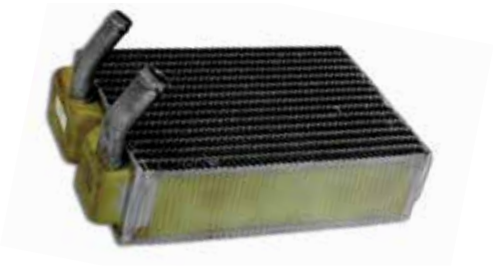

#1179
1963-67
Heater
Core

#4006
1963-67
AC Conversion
System

Air Conditioning Conversion System

Your complete Perfect Fit Corvette A/C system comes with:

- All interior components. • Evaporator assembly.
- Condenser kit including pre-engineered condenser mounting.
- Pre crimped refrigeration hoses. • Sanden style compressor.
- Hi-Low refrigerant pressure switch for compressor protection.
- Aluminum hookup tubes. • Compressor mounting hardware.
- Installation instructions and mounting template.

4006 63-67 AC Conversion System..... **$1667.99**

1963-67 HEATER

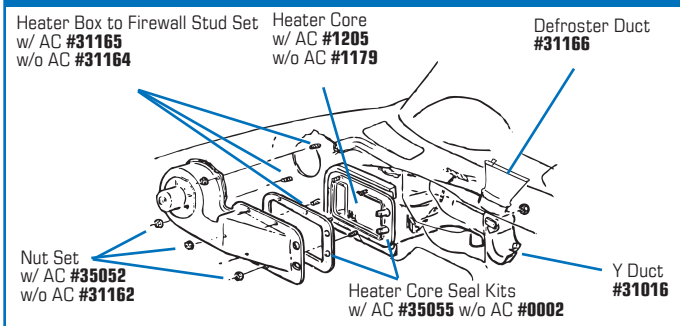

1964-67 327 AC COMPRESSOR MOUNTING

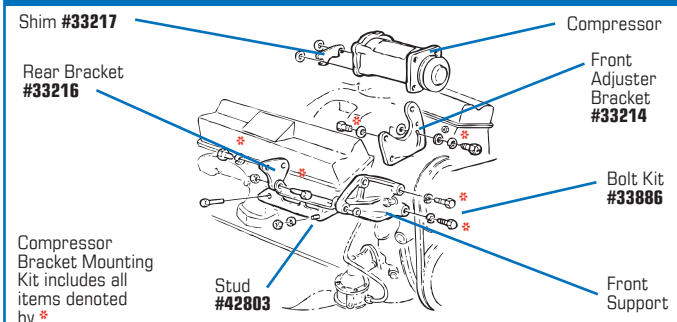

33214 64-67 AC Compressor Adjuster Brace - Front - 327..... **$70.99**
33216 64-67 AC Compressor Bracket - Rear - 327 ..... **$24.99**
42803 64-67 AC Compressor Bracket to Manifold Stud..... **$9.99**
33430 64-67 AC Compressor Bracket Mounting Kit - 26 pc **$19.99**
35022 64-67 AC Compressor Mount Bolts & Washers - 327..... **$7.99**
33217 64-67 AC Compressor Rear Bracket Shim - 327 ..... **$4.99**
33886 64-67 AC Compressor Support Bolts - Front..... **$9.99**

1966-67 427 AIR COMPRESSOR MOUNTING

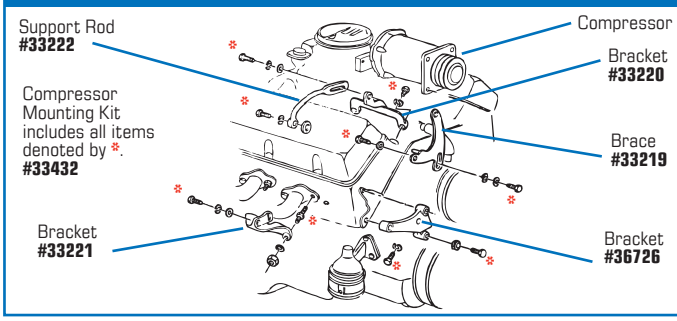

33219 66-67 AC Compressor Adjuster Brace - 427..... **$44.99**
K1256 66-67 AC Compressor Adjuster Brace Pivot
Bolt & Washer Set - 427 ..... **$3.99**
36726 66-67 AC Compressor Bracket - Front - 427 ..... **$101.99**
33221 66-67 AC Compressor Bracket - Rear - 427 ..... **$91.99**
36727 66-67 AC Compressor Bracket Bolt Kit - Rear - 427..... **$2.99**
33432 66-67 AC Compressor Bracket Mount Kit - 30 pc..... **$20.99**
33222 66-67 AC Compressor Rear Support Rod - 427 ..... **$45.99**
33220 66-67 AC Compressor Rear Support Rod Bracket - 427 **$68.99**

1963-67 A/C VENTS

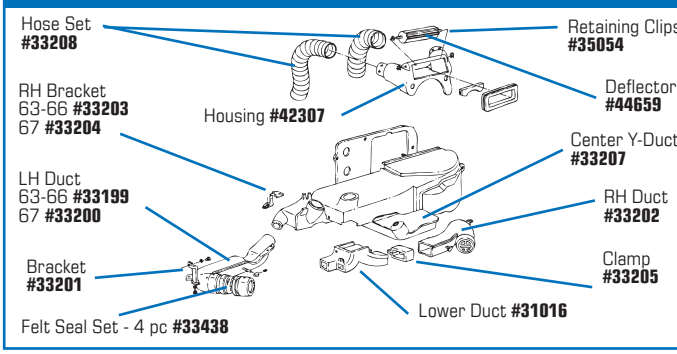

Call Today & SAVE on a NEW Interior Package!

Get discounts on Interiors & Parts when you order an Interior Package!

WARNING: Cancer and Reproductive Harm — www.P65Warnings.ca.gov

Serving the Corvette Community Since 1977.

ADDITIONAL AC COMPONENTS

37957	66-67	AC Blower Motor w/ Fan	$73.99
42300	63-67	AC Blower Motor Cooling Tube	$21.99
35047	63-67	AC Blower Motor Resistor Gasket	$3.99
K1455	63-67	AC Blower Motor Resistor Screws - 4 pc	$5.99
42020	63-65	AC Condensor	$473.99
42021	66-67	AC Condensor	$473.99
40936	63-67	AC Compressor - A6 w/ 5" Pulley - Replacement Style - Remanufactured	$397.99
51406	63-67	AC Compressor - A6 w/ 5" Pulley - Original Style - Remanufactured	$387.99
51200	63-67	AC Compressor - A6 w/ 5.75" Pulley - Remanuf.	$427.99
33223	66-67	AC Compressor Bracket Mount Studs	$8.99
51405	63-67	AC Compressor Harness Extension	$15.99
33215	64-67	AC Compressor Support - Front - SB	$70.99
33218	64-67	AC Compressor Support - Rear - SB	$79.99
22130	63-66	AC Duct w/ Baffle - LH	$264.99
22132	67	AC Duct w/ Baffle - LH	$274.99
22131	63-66	AC Duct w/ Baffle - RH	$241.99
33199	63-66	AC Duct LH - Replacement	$231.99
33200	67	AC Duct LH - Replacement	$248.99
33202	63-67	AC Duct RH - Replacement	$195.99
33201	63-67	AC Duct Bracket - LH Bracket for LH Duct	$20.99
33203	63-66	AC Duct Bracket - RH Bracket for LH Duct	$27.99
33204	67	AC Duct Bracket - RH Bracket for LH Duct	$22.99
33205	63-67	AC Duct Clamp For RH Duct	$37.99
35053	63-67	AC Duct Mounting Screws & Washers - 8 pc	$2.99
33197	63-67	AC Electric Shut Off Switch on Inner Heater Box	$46.99
35056	63-67	AC Electric Shut Off Switch Screws - pr	$1.99
42294	63-65	AC Evaporator Core	$264.99
42295	66	AC Evaporator Core	$295.99
42296	67	AC Evaporator Core	$337.99
36721	63-67	AC Expansion Valve	$70.99
46867	63-67	AC Heater Vacuum Switch	$75.99
35041	63-67	AC Hoses - 3 pc set w/o Logo	$87.99
42293	63-67	AC Hose Clamp Set	$8.99
42297	63-65	AC Hose Fitting Grommet - Radiator Support	$10.99
42298	66-67	AC Hose Fitting Grommet - Radiator Support	$10.99
35046	63-67	AC Muffler Fitting Cap - Brass Hex - Original Style	$10.99
35044	63-67	AC "O-Rings" - 12 pc	$7.99
K1348	63-67	AC Plenum Cover Screw Set	$8.99
40937	63-67	AC Pressure Relief Valve - Back of Compressor	$56.99
42287	63-67	AC Receiver / Drier	$50.99
42288	63-67	AC Receiver / Drier Brackets - pr	$17.99
42301	63-67	AC Relay - Replacement	$18.99
35045	63-67	AC STV / POA Valve Cap - Alum. - Original Style	$10.99
42305	63-64	AC Vacuum Hose Set - 64E	$27.99
35050	64-67	AC Vacuum Hose Set - 64L	$17.99
42304	63-64	AC Vacuum Hose "T" Fitting - 64E	$2.99
35051	64-66	AC Vacuum Hose "T" Fitting - 64L	$2.99
33438	63-67	AC Vent Deflector Ball Felt Seals - 4 pc	$5.99
33198	63-67	Blower Motor Resistor on Top Outer AC Box	$35.99
35057	63-67	Blower Motor Screw & Terminal Set	$5.99
44659	63-67	Center Dash Deflector	$150.99
33213	63-67	Center Dash Deflector Bezel	$141.99
35054	63-67	Center Dash Deflector Retaining Clips - pr	$0.99
42307	63-67	Center Dash Housing	$168.99
33207	63-67	Center Y Duct w/ AC	$166.99
35036	63-64	Compressor Fitting & Muffler	$172.99
35037	64-65	Compressor Fitting & Muffler - 327	$192.99
35038	66-67	Compressor Fitting & Muffler - 327	$172.99
42292	66	Compressor Fitting & Muffler - 427 - 66E	$172.99

#42020 1963-65 AC Condensor

#33199 1963-66 AC Duct - LH

#42287 AC Receiver / Drier

#33198 AC Blower Motor Resistor - on Outer AC Box

#42308 Power Vent Resistor

35039	66-67	Compressor Fitting & Muffler - 427 - 66L	$172.99
35040	63-67	Compressor Fitting Bolt / Lockwasher / Spacer Set	$3.99
35026	63-65	Condenser to Receiver / Drier Fitting	$45.99
35029	63-65	Condenser to Hose Fitting	$50.99
35030	66	Cond. to Hose Fitting - Early over Rad. Support	$38.99
35031	66-67	Cond. to Hose Fitting - Late thru Rad. Support	$50.99
33208	63-67	Dash Hose Set w/ AC	$39.99
33209	63-67	Dash Hose Clamps w/ AC - pr	$10.99
4008	63-67	Electric Fan Kit	$203.99
35032	63-65	Expansion Valve to Hose Fitting - 90°	$32.99
35033	66-67	Expansion Valve to Hose Fitting - Straight	$28.99
K1257	64-67	Hose Bracket Bolt, Lockwasher & Locknut 327 Set	$1.99
31016	64-67	Lower Duct at Floor	$234.99
42303	67	POA Tube Clamp - w/ Screw	$0.99
36759	67	POA Update Kit R12	$116.99
36760	67	POA Update Kit 134A	$116.99
35035	67	POA Valve to Hose Fitting	$45.99
35027	63-65	Receiver / Drier to Hose Fitting	$39.99
35028	66-67	Receiver / Drier to Hose Fitting	$50.99
35025	63-67	Receiver / Drier Bracket Screws - pr	$1.99
42290	63-66	S.T.V. Update Kit	$167.99
35034	63-66	STV Valve to Hose Fitting	$45.99

800-458-3475
CorvetteAmerica.com
WARNING: Cancer and Reproductive Harm — www.P65Warnings.ca.gov

#51200 AC Compressor - A6 - 5.75" Pulley

#40936 AC Compressor - A6 - 5" Pulley

#X2636 1963-67 Vent Grilles - w/o AC

#34649 1963-67 Vent Door Seal Kit

#34346 Aero-Rivet Tool

#37255 1965 Power Vent Control Cable Assembly

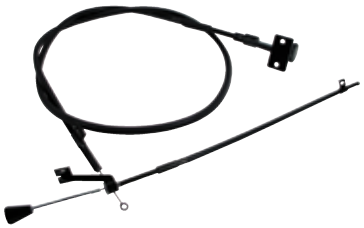

#37245 1963-64 Vent Cable Assembly

#29917 1967 Vent Door w/ Seal

Power Vent Components

34346	63-67	Aero-Rivet Tool $96.99
37253	64	Power Vent Blower Cable Assembly - w/o AC $111.99
37254	64	Power Vent Blower Cable Assembly - w/ AC $132.99
37257	65	Power Vent Blower Cable Assembly - w/ AC $132.99
37256	64-65	Power Vent Blower Motor Clamp $19.99
35061	64-65	Power Vent Blower Motor Mounting Screws & Grommets Set $19.99
35062	64-65	Power Vent Blower Motor Mounting Stud Plates & Rivets Set $13.99
37255	65	Power Vent Control Cable Assembly $111.99
35098	64-65	Power Vent Cover - Cardboard $19.99
K1423	64-65	Power Vent Cover Screw Set $3.99
35162	64-65	Power Vent Cover U-Nuts - 4 pc $1.99
35063	64-65	Power Vent Drain Hose - Replacement $23.99
35064	64-65	Power Vent Drain Hose Clamp $4.99
35065	64-65	Power Vent Drain Hose Shield $16.99
35066	64-65	Power Vent Drain Hose Shield Mount Kit $2.99
35163	64-65	Power Vent Rear Screen $13.99
42308	63-67	Power Vent Resistor $21.99
42310	63-67	Power Vent Resistor Plug $5.99
42309	63-67	Power Vent Resistor Screws - pr $1.99

1964-65 COUPE POWER VENT

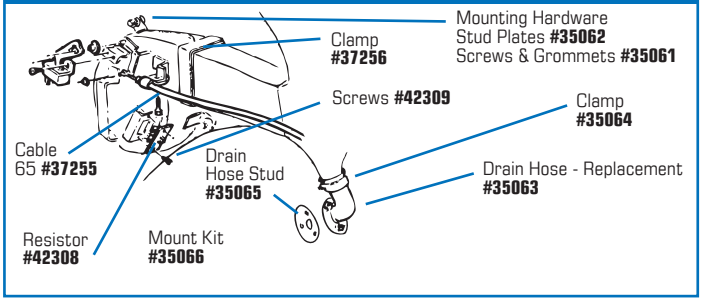

Ventilation

37245	63-64	Vent Cable Assy w/ Knob & Brkt - w/o AC - pr $145.99
37246	65-66	Vent Cable Assy w/ Knob & Brkt - w/o AC - pr $167.99
28600	63-64	Vent Cable Assy w/ Knob & Brkt - w/o AC - LH $88.99
42010	65-66	Vent Cable Assy w/ Knob & Brkt - w/o AC - LH $88.99
28601	63-64	Vent Cable Assy w/ Knob & Bracket - All - RH $88.99
28603	65-66	Vent Cable Assy w/ Knob & Bracket - All - RH $88.99
37249	67	Vent Cable Less Knob - Replacement - LH $44.99
38429	67	Vent Cable Less Knob - Replacement - RH $44.99
42160	63-67	Vent Cable Bracket - RH w/ AC $15.99
K1346	63-67	Vent Cable to Grille Screws - pr $1.99
32992	63-67	Vent Cable / Hood Release Cable Clip $7.99
K1263	63-64	Vent Cable Mount Screws - pr $1.99
K1265	65-66	Vent Cable Mount Screws - pr $1.99
K1294	63-67	Vent Cable Retainers - 5 pc $2.99
29916	63-66	Vent Door w/ Seal $54.99
29917	67	Vent Door w/ Seal $54.99
34649	63-67	Vent Door Seal Kit $10.99
X2493	63-67	Vent Grille - LH $50.99
X2494	63-67	Vent Grille - RH - w/o AC $50.99
42159	63-67	Vent Grille - RH - w/ AC $124.99
X2636	63-67	Vent Grilles - pr w/o AC $81.99
K1233	63-67	Vent Grille Screw Set $3.99
29927	65-66	Vent Knob - Black $13.99
29908	67	Vent Knob on Radio Side Panel $20.99

1963-67 FRESH AIR VENTS & CABLES

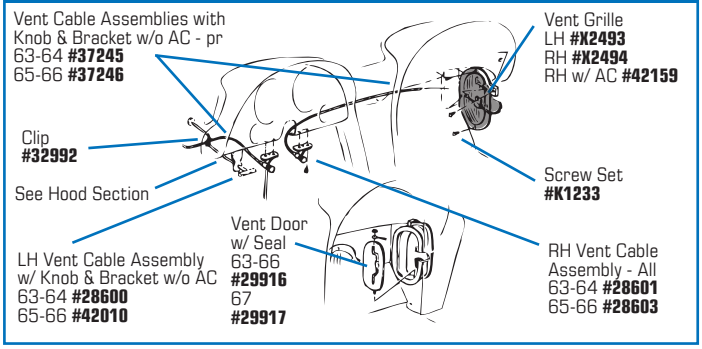

FAST Shipping!

Fast Service & Delivery!

Most orders are processed & shipped the same day!

WARNING: Cancer and Reproductive Harm — www.P65Warnings.ca.gov

Serving the Corvette Community Since 1977.

For actual Hoods see **Fiberglass** Section.

#X2487 Hood Hinge - LH

#X2488 Hood Hinge - RH

HOOD

26632	63	Hood Alignment Wedges - Die-Cast - Lower - pr	$80.99
26631	63	Hood Alignment Wedges - Plastic - Upper - pr	$32.99
26633	63	Hood Alignment Wedges - Set of 4 - 2 Upper Plastic & 2 Lower Die Cast	$92.99
37260	63	Hood Alignment Wedge Bolts & Washers - 16 pc	$28.99
42318	63	Hood Align. Wedge Reinforc. - Fiberglass - pr	$104.99
K1030	63-67	Hood Bumpers - pr	$2.99
35068	63-67	Hood Bumper Bolt Set	$1.99
22490	63	Hood Grilles - pr	$509.99
1184	65-66	Hood Grille - 396 / 427 - LH	$44.99
1185	65-66	Hood Grille - 396 / 427 - RH	$44.99
1187	67	Hood Grille - 427	$90.99
3887	65-66	Hood Grille Rain Shields - 396 / 427 - pr	$24.99
28425	65-66	Hood Grille Retainers - 396 / 427 - 6 pc	$16.99
34733	65-66	Hood Grille Retainer Screw Set	$4.99
37263	67	Hood Grille Fiberglass Reinforcement Baffle	$159.99
37262	67	Hood Grille Screws & Nuts - 26 pc set	$11.99
X2487	63-67	Hood Hinge - LH	$22.99
X2488	63-67	Hood Hinge - RH	$22.99
51321	63-67	Hood Hinges - LH & RH	$40.99
K1334	63-67	Hood Hinge Bolt Set - 10 pc set	$6.99
29725	63-67	Hood Hinge Shim - 1/16"	$2.99
42316	63-82	Hood Hinge Shim - 1/8"	$1.99
35072	63-67	Hood Hinge & Radiator Reinforcement - LH	$31.99
35073	63-67	Hood Hinge & Radiator Reinforcement - RH	$31.99
35074	63-67	Hood Hinge & Radiator Reinforcement Screws	$3.99
51935	63-67	Hood Insulation Set - AcoustiShield w/o Logo	$189.99
51936	63-67	Hood Insulation Set - AcoustiShield w/ Logo	$259.99
34629	63-64	Hood Latch - Female - LH	$58.99
1731	65-67	Hood Latch - Female - LH	$58.99
34630	63-64	Hood Latch - Female - RH	$58.99
1732	65-67	Hood Latch - Female - RH	$58.99
K1467	63-67	Hood Latch Bolt Set - Female - 6 pc	$4.99
35069	63-67	Hood Latch Nut Plate w/ Rivets - Female	$13.99
28423	63-67	Hood Latch Release Cable	$7.99
33228	63-67	Hood Latch Release Cable Clip On Firewall	$2.99
32765	63-67	Hood Latch Tension Spring - Female	$3.99
28424	63-67	Hood Lock Assemblies - Male - on Hood - pr	$55.99
3888	63-67	Hood Lock Bolt - Male	$15.99
32764	63-67	Hood Lock Spring - Male	$5.99
35071	63-67	Hood Lock Spring Retainer - Male	$4.99
3889	63-67	Hood Lock Spring Seat - Male	$9.99
1190	67	Hood Number "4" - 2 req'd	$5.99
1191	67	Hood Number "2" - 2 req'd	$5.99
1192	67	Hood Number "7" - 2 req'd	$5.99
X2075	67	Hood Number Set - 427 - 6 pc - w/ Speednuts	$30.99
K1029	67	Hood Number Speednuts - 12 pc	$2.99
20341	67	Hood Stencil Kit - Big Block - Stinger	$42.99
1195	63-67	Hood Support	$42.99
33230	63-67	Hood Support Bolt Set - 4 pc set	$6.99
35602	63-67	Hood Support Pin - prevents accidentally closing	$10.99
33231	63-67	Hood Support Reinforcement	$10.99
42317	67	Hood Weatherstrip Pins - pr	$2.99

#22490 1963 Hood Grilles

#1184 1965-66 Hood Grille - 396/427 - LH

#1187 1967 Hood Grilles - 427

#22387 Hood Release Cable, Handle & Bracket w/ AC

#1767 1963-66 Hood Release Cable Assembly w/o AC

HOOD RELEASE CABLES

25329	67	Hood Release Cable Assembly w/ Bracket	$45.99
22388	63-66	Hood Release Cable Bracket only - w/ AC	$34.99
37259	63-66	Hood Release Cable Bracket only - w/o AC	$16.99
33225	63-66	Hood Release Cable Bracket to Dash Bolts - pr	$1.99
K1445	67	Hood Release Cable Bracket to Dash Bolts - pr	$1.99
35070	63-66	Hood Release Cable Bracket Nut Plate w/ AC	$10.99
28469	63-67	Hood Release Cable Grommet	$1.99
37258	63-66	Hood Release Cable Handle only	$24.99
33227	63-67	Hood Release Cable to Latch Guide	$4.99
28468	63-67	Hood Release Cable Stop - 2 req'd	$4.99
32992	63-67	Hood Release Cable to Vent Cable Retaining Clip	$7.99
22387	63-66	Hood Release Cable & Handle - w/ AC	$112.99
1767	63-66	Hood Release Cable Assembly - w/o AC - Includes: Bracket & Hardware	$65.99

800-458-3475
CorvetteAmerica.com

WARNING: Cancer and Reproductive Harm — www.P65Warnings.ca.gov

#34629 1963-64
Hood Latch - Female - LH

#28424 1963-67
Male Hood Lock

#1195
Hood
Support

For actual Hoods see Fiberglass Section.

1963-67 HOOD GRILLES

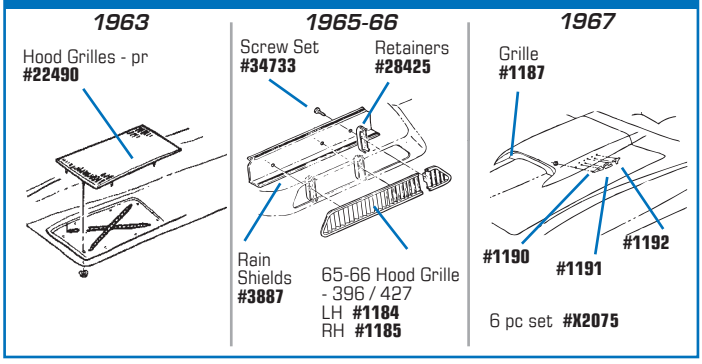

1963-67 HOOD LATCH RELEASE

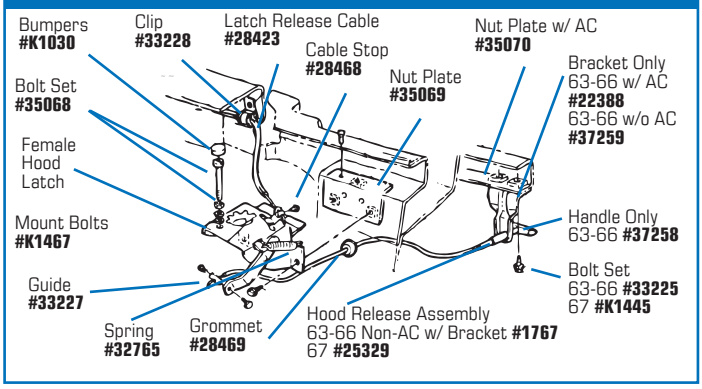

1963-67 HOOD HINGES, SUPPORT & MALE LATCH

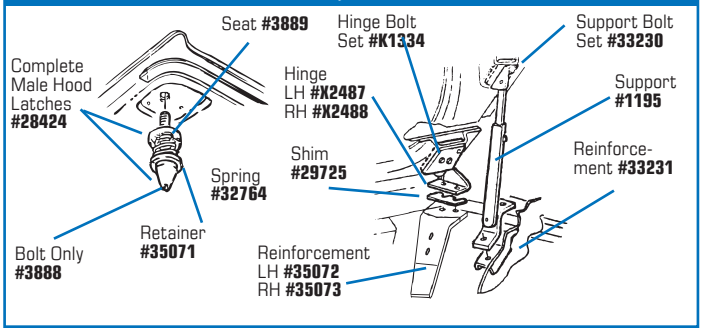

JACKS

#0227 1963-65 Jack - 1st design (Show purposes only)

#0127 1963-67 Replacement Jack w/ Handle

REPRODUCTION JACKS

Authentic reproductions of all 3 styles that came with 1965 Vettes:

- Design 1 for first 7,000 produced
- Design 2 for 7,001 to 20,000
- Design 3 for 20,001 and up.

0227	63-65 Jack - 1965 1st Design - for Show only	$307.99
0127	63-67 Jack - w/ Handle - Replacement	$179.99
42362	63-65 Jack Bearing - for Early and Mid 65	$12.99
42363	65-67 Jack Bearing - for Late 65	$10.99
23780	63-67 Jack Handle Grommet	$3.99
33232	63-64 Jack Handle / Lug Wrench - No Hole	$29.99
33233	65-66 Jack Handle / Lug Wrench - 1 Hole	$29.99
33234	67 Jack Handle / Lug Wrench - 3 Hole	$29.99
37318	63-64 Jack Stowage Spring - 1 Hook	$9.99
1169	65-67 Jack Stowage Spring - 2 Hooks	$9.99
33235	63-67 Jack Stowage Spring Mount Bracket w/ Rivets	$13.99

Corvette America

Gift Certificates

*Delivered **FREE** via First-Class Mail.*

A Great Gift for any Corvette Enthusiast!

GC025	$25 Certificate	**$25**
GC050	$50 Certificate	**$50**
GC100	$100 Certificate	**$100**
GC200	$200 Certificate	**$200**
GC300	$300 Certificate	**$300**
GC400	$400 Certificate	**$400**
GC500	$500 Certificate	**$500**

Gift Certificates are Non-Transferable and Non-Refundable.

WARNING: Cancer and Reproductive Harm —
www.P65Warnings.ca.gov

#46614 1963-67 Headlight Assembly Kit

#1257 1963-67
New Reproduction
Headlight Motor - LH

#22532

#1488

HEADLIGHT ASSEMBLY

Designed using genuine GM blueprints, our headlights are accurately reproduced for the correct look and fit. Sold as pairs. Motors not included.

46614 63-67 Headlight Assembly - Includes: Housings, Bezels, 4 Cups, Retainer Rings, Pivots, Stops, Inner & Outer Supports, Bearings & Assembly Hardware, Wiring, Bulbs & Limit Switches - pr $1427.99
46618 63-67 Headlight Assembly - w/o Bezels - Complete Assembly, includes Bulbs & Wiring. Motors sold separately #1257 & #1258 ..... $1427.99
46617 63-67 Headlight Assembly - Wiring..... $67.99

HEADLIGHT

K1031 63-67 Headlight Adjuster w/ Screw - 8 req'd $3.99
K1186 63-67 Headlight Adjuster & Mount Kit - Includes: 4 adjusters & 2 Capsule Tension Springs - does one Headlight $22.99
K1240 63-67 Headlight Adjuster Screws - 8 pc..... $7.99
K1046 63-67 Headlight Adj. & Insulator Mount Screws - 20 pc... $3.99
0570 63-67 Header Bar $116.99
0571 63-67 Header Bar Wire Clip Set - 4 pc $40.99
1388 63-67 Headlight Bezel - RH $156.99
1487 63-67 Headlight Bezel - LH - Replacement..... $75.99
1488 63-67 Headlight Bezel - RH - Replacement $75.99
K1136 63 Headlight Bezel Screws - 63E - 8 pc $5.99
K1402 63 Headlight Bezel Screws - 63L - 8 pc..... $2.99
34735 64-67 Headlight Bezel Screws - 8 pc set..... $4.99
37284 63 Headlight Bucket Fiberglass Skin - LH..... $110.99
37285 63 Headlight Bucket Fiberglass Skin - RH $110.99
37286 63 Headlight Bucket to Housing Screws - 8 pc..... $4.99
K1295 63-67 Headlight Bucket Hole Plugs - 4 pc..... $1.99
1252 63-67 Headlight Bucket Housing Spacer - 4 req'd $6.99
1263 63-67 Headlight Bucket Limit Switch - 2 req'd $10.99
33240 63-67 Headlight Bucket Limit Switch Screws - 4 pc $1.99
22532 63-67 Headlight Bulbs - T-3 - 4 pc $126.99
29518 63-67 Headlight Bulb Retainer Cup - Inner - LH..... $21.99
29519 63-67 Headlight Bulb Retainer Cup - Inner - RH $21.99
29516 63-67 Headlight Bulb Retainer Cup - Outer - LH..... $21.99
29517 63-67 Headlight Bulb Retainer Cup - Outer - RH $21.99
X2073 63-67 Headlight Bulb Retaining Ring $9.99
K1047 63-67 Headlight Bulb Retaining Ring Screws - 6 pc $2.99
31119 63-67 Headlight Capsule Bumper Set - 4 pc $5.99
X2236 63-67 Headlight Capsule Tension Spring - 4 req'd..... $1.99
49532 63-67 Headlight Clevis Bushing $1.99

24580 63-67 Headlight End Plate Assembly - Inner LH $101.99
24581 63-67 Headlight End Plate Assembly - Inner RH $101.99
24582 63-67 Headlight End Plate Assembly - Outer LH $113.99
24583 63-67 Headlight End Plate Assembly - Outer RH $113.99
34734 63-67 Headlight End Plate Mount Screws - 8 pc $6.99
1257 63-67 Headlight Motor - New Reproduction - LH..... $387.99
1258 63-67 Headlight Motor - New Reproduction - RH $387.99
37770 63-67 Headlight Motor - Rebuilt - LH *..... $223.99
37769 63-67 Headlight Motor - Rebuilt - RH * $223.99
* Core Charge Required.
33238 63-67 Headlight Motor Adjuster Wheel w/ Retainer $5.99
42372 63-67 Headlight Motor Armature Adjust. Stud & Nut..... $7.99
42369 63-67 Headlight Motor Bearing - Bronze $7.99
42370 63-67 Headlight Motor Bearing Spring $7.99
42371 63-67 Headlight Motor Bearing Spring Retainer..... $6.99
33236 63-67 Headlight Motor Bracket on Motor - LH..... $90.99
33237 63-67 Headlight Motor Bracket on Motor - RH $90.99
34741 63-67 Headlight Motor Bracket Screws - 4 pc..... $3.99
42367 63-67 Headlight Motor Gear Nylon Washer $4.99
42368 63-67 Headlight Motor Gear Washers - Steel - pr..... $7.99
1259 63-67 Headlight Motor Mount Bracket..... $5.99
1262 63-67 Headlight / Wiper Motor Mount Grommet $5.99
31246 63-67 Headlight Motor Grommet Mounting Screws - pr .. $1.99
K1322 63-67 Headlight Motor Mount Bracket — Screws & Lockwashers - 4 pc..... $1.99
33239 63-67 Headlight Motor Pivot Bushings - pr $3.99
42366 63-67 Headlight Motor Plugs - pr $5.99
K1307 63-67 Headlight Motor Retaining Clips - 2 pc $1.99
1253 63-67 Headlight Motor Support Stud - 2 req'd..... $8.99
31240 63-67 Headlight Opening Stop - Y Shaped $43.99
K1280 63-67 Headlight Opening Stop Mounting Screws - pr..... $1.99
31241 63-67 Headlight Opening Stop Screws - 4 pc..... $5.99
1249 63-67 Headlight Pivot Bearing - 4 req'd..... $9.99
31243 63-67 Headlight Pivot Bearing Felt Seal - 4 pc $4.99
31244 63-67 Headlight Pivot Bearing Rubber Seal $2.99

800-458-3475
CorvetteAmerica.com
WARNING: Cancer and Reproductive Harm — www.P65Warnings.ca.gov

31245	63-67 Headlight Pivot Bearing Seal Washer	$2.99
1246	63-67 Headlight Pivot Support - Inner LH	$54.99
1247	63-67 Headlight Pivot Support - Inner RH	$54.99
1248	63-67 Headlight Pivot Support - Outer - 2 req'd	$54.99
33241	63-67 Headlight Pivot Support Bolt Set - 12 pc	$16.99
31113	63-67 Headlight Housing - LH	$300.99
31114	63-67 Headlight Housing - RH	$300.99
K1332	63-67 Headlight Housing J-Nuts - 4 pc set	$1.99
31115	63-67 Headlight Pivot - Inner - LH	$101.99
31116	63-67 Headlight Pivot - Inner - RH	$101.99
31123	63-67 Headlight Pivot - Outer - LH	$101.99
31132	63-67 Headlight Pivot - Outer - RH	$101.99
31141	64-67 Headlight Pivot Screw Set - 16 pc set	$10.99
K1510	63-67 Headlight Sealed Beam Retaining Ring Screws	$4.99
31147	63-65 Headlight / Nose Support Rod	$51.99

1963-67 HEADLIGHT

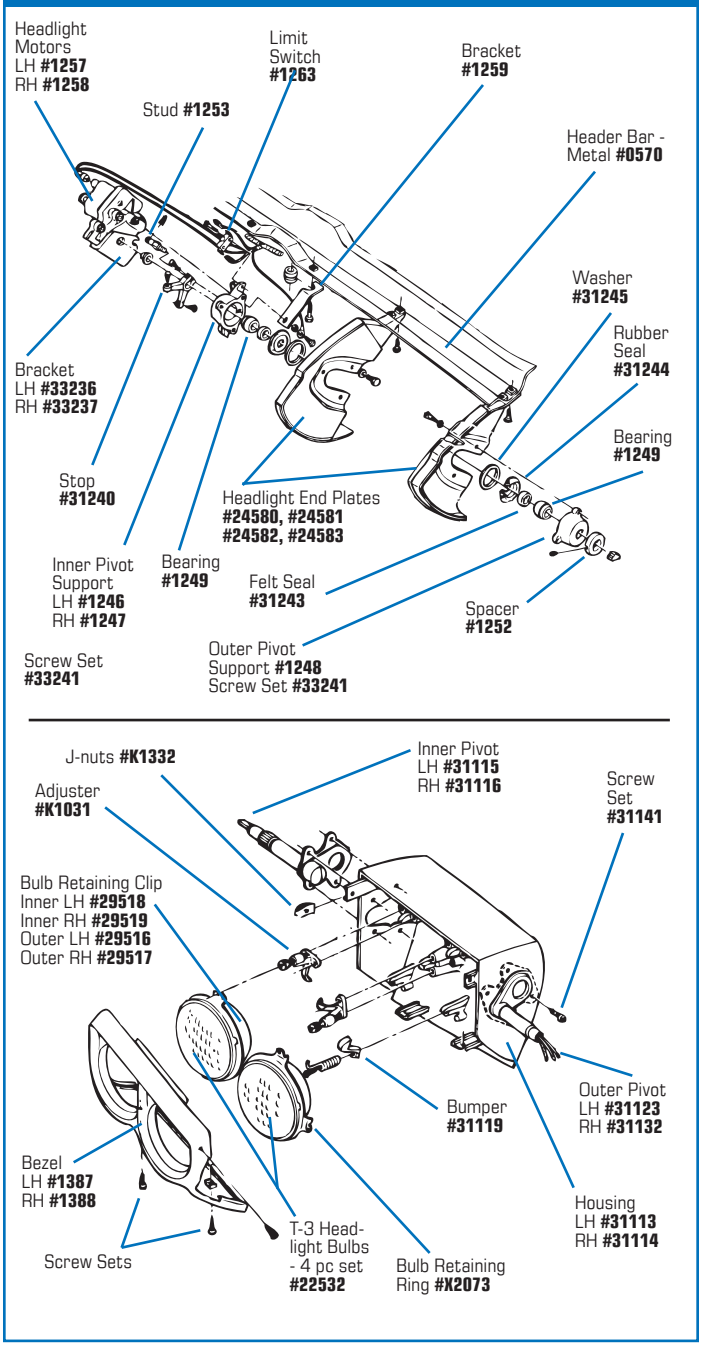

#1261 1963-67 Headlight Retract Switch

#X2073

#31240

#1247

#K1186

#31116

Additional Headlight Components

37291	63-67 Clips - Wire Harness to Header Bar - 4 pc	$33.99
30030	63-67 Dimmer Switch	$11.99
33392	63-67 Dimmer Switch Mounting Plate	$8.99
35172	63-67 Dimmer Switch Plug & Terminal Set	$3.99
K1293	63-67 Dimmer Switch Screws - pr	$1.99
29447	63-66 Front Park Lamp Extension - Repair Kit	$57.99
29448	67 Front Park Lamp Extension - Repair Kit	$57.99
42364	63-67 Headlight Exten. Harness Plugs - on bucket - pr	$5.99
42365	63-67 Headlight Extension Harness Plugs - Main Harness - pr	$5.99
34920	63-66 Headlight Motor Circuit Breaker w/ Nuts	$13.99
34921	63-66 Headlight Motor Circuit Breaker Clip	$15.99
1846	63-67 Headlight Motor Gear	$39.99
31145	63-65 Headlight & Nose Support Rod - LH	$19.99
31148	63-65 Headlight & Nose Support Rod Brackets - pr	$10.99
31153	66-67 Headlight & Nose Support Rod Brackets - pr	$10.99
31158	63-67 Headlight / Nose Support Rod Bracket to Lower Valance Bolts Set	$1.99
K1347	63-67 Headlight / Nose Support Bolt Set - Lower	$3.99
31155	63-67 Headlight / Nose Support Bolt Set -"WB"- Upper	$1.99
1261	63-67 Headlight Retract Switch	$102.99
37289	63-67 Headlight Retract Switch Connector	$19.99
K1092	63-67 Headlight Retract Switch Mounting Screws & Nuts - 4 pc	$1.99
0160	63 Headlight Switch - Dash	$30.99
1266	64-67 Headlight Switch - Dash	$20.99
34922	63-67 Headlight Switch Nut w/ Bushing	$16.99

ELECTRIC HEADLIGHT DOOR KIT

This Electric Headlight Door Kit replaces the stock electric actuated system on all 1963-67 Corvettes. When installed, this kit operates the headlight doors more reliably, smoother & in sync than stock. The C2 Electric Headlight Kit uses current sensing technology to provide a system that needs no adjustment & is extremely safe. No permanent modification to your classic Corvette is needed. Owners have the option to return their vehicle back to its original configuration if desired, leaving no holes or spliced wires behind. Once installed, you will no longer need to operate the headlamp doors separately with the problematic factory momentary switch, the control module will automatically actuate them when the headlamps are turned on/off. The doors can also be manually opened & closed for headlight maintenance/cleaning by simply rotating them by hand (unlike originals that require the owner to open the hood and locate/spin a tiny wheel on the motor.) The kit comes complete with everything you need for installation including two electric actuators, a control module, harness, mounting brackets & hardware.

52390 63-67 Electric Headlight Door Kit **$586.99**

#1269 Parking Light Lens

#1270 Parking Light Retainer

#44623 Parking Light

#1053 1964-66 Park Brake Light Switch

#40960 1963-67 Dome Light Socket

#37661 1963-67 Dome Light Assembly

#26635 1963-67 Dome Light Bezel

INTERIOR & PARKING LIGHTS

1055	63	Courtesy Lamp Switch - 63 E	$9.99
1054	63-67	Courtesy Lamp Switch	$9.99
42171	63-67	Courtesy Light Bracket - w/AC - LH	$9.99
42172	63-67	Courtesy Light Bracket - w/AC - RH	$9.99
37661	63-67	Dome Light Assembly	$44.99
26635	63-67	Dome Light Bezel	$33.99
28621	63-67	Dome Light Lens	$6.99
40958	63-67	Dome Light Mount Screws / U-Nuts Set	$1.99
40960	63-67	Dome Light Socket	$9.99
1053	64-66	Emergency Brake Light Switch	$4.99
1268	63-67	Parking Light - Replacement	$70.99
44623	63-67	Parking Light - Reproduction	$111.99
33923	63-67	Parking Light Bulb - Hi Output	$2.99
1269	63-67	Parking Light Lens - Correct	$9.99
37283	63-67	Parking Light Lens Gasket	$2.99
K1260	63-67	Parking Light Lens Screws - 8 pc	$4.99
1270	63-67	Parking Light Retainer	$9.99

800-458-3475
CorvetteAmerica.com
WARNING: Cancer and Reproductive Harm — www.P65Warnings.ca.gov

#22568 1963-66 Taillights w/ Backup Lights

#26636 1963-67 License Light Assembly

#X2015 1963-67 Rear License Bezel

#41797 Halogen 50 Watt Backup Bulbs

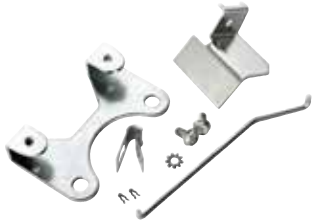

#28648 Backup Lamp Switch Bracket Kit

#0175 1963-67 Taillight Lens

#26634 1963-66 Clear Backup Light Lens

#45001 LED Taillight

#45002 LED Backup Light

#22569 1963-67 Taillights - All Red - Trim Parts - 4 pc

#45003 1967 LED Backup Light LH

Taillights

22568	63-66 Taillights - w/ Backup Lights - 4 pc - Trim Parts	$295.99
22569	63-67 Taillights - All Red - 4 pc - Trim Parts	$285.99
28660	63-67 Taillight Assembly - Inner LH - Trim Parts	$81.99
28662	63-67 Taillight Assembly - Inner RH - Trim Parts	$81.99
28661	63-67 Taillight Assembly - Outer LH - Trim Parts	$81.99
28663	63-67 Taillight Assembly - Outer RH - Trim Parts	$81.99
34745	63-67 Taillight to Body Gaskets - 4 pc	$7.99
0175	63-67 Taillight Lens - Red	$10.99
0177	63-67 Taillight Lens Gasket	$1.99
34742	63-67 Taillight Lens Wicks - 4 pc	$5.99
K1260	63-67 Taillight Lens Screws - 8 pc	$4.99
K1021	63-67 Taillight Speednuts - 8 pc	$2.99

LED Taillights

Constructed of durable polycarbonate with solid-state electronics, these lights are nearly impervious to wear and tear. Get all of the benefits of LED technology in a simple, 3-step installation.

45002	63-66 LED Backup Light	$62.99
45003	67 LED Backup Light LH	$41.99
45060	67 LED Backup Light - RH	$41.99
45061	63-67 LED Flasher - 2 Terminal	$9.99
46885	63-67 LED Parking Light Lens - Amber	$40.99
46886	63-67 LED Parking Light Lens - Clear	$40.99
45001	63-67 LED Taillight	$31.99
45063	63-67 Polarity Reverser	$0.99

WARNING: Cancer and Reproductive Harm — www.P65Warnings.ca.gov

BACKUP LIGHTS

29145	64-67	Backup Lamp Switch - 4 Speed	$67.99
30055	64-67	Backup Lamp Switch Bracket - 4 Speed	$12.99
K1313	64-67	Backup Lamp Switch Mount Screws Set	$1.99
33395	64-67	Backup Lamp Switch Rod - 4 Speed	$4.99
K1360	64-67	Backup Lamp Switch Rod Clips - pr	$1.99
30056	64-67	Backup Lamp Switch Shield - 4 Speed	$9.99
28647	63	Backup Lamp Switch Bracket Kit - 63 E	$72.99
28648	63-67	Backup Lamp Switch Bracket Kit - 63 L	$60.99
1228	63-66	Backup Light Assembly - LH - Trim Parts	$81.99
1229	63-66	Backup Light Assembly - RH - Trim Parts	$81.99
28448	67	Backup Light Assemblies - pr	$432.99
41797	63-67	Backup Light Bulbs - 50 watt Halogen - pr	$18.99
26634	63-66	Backup Light Lens - Clear	$8.99
28370	67	Backup Light Lenses - pr	$64.99
34746	67	Backup Light Lens Gaskets - pr	$3.99
34747	67	Backup Light Lens Screws - 4 pc	$3.99
X2015	63-67	License Bezel - Rear	$87.99
26636	63-67	License Light Assembly	$111.99
35646	63-67	License Light to Body Gasket	$6.99
35647	63-67	License Light Bulb	$1.99
0163	63-67	License Light Lens	$20.99
34749	63-67	License Light Lens Gasket	$4.99
34750	63-67	License Light Lens Screws - 4 pc	$3.99
K1258	63-67	License Light Mounting Hardware - 12 pc	$2.99
20149	63-67	Rear Courtesy Lamp Terminal	$1.99
29637	63-67	Rear Lamp Boot	$12.99

1963-67 LICENSE, BACKUP & TAILLIGHTS

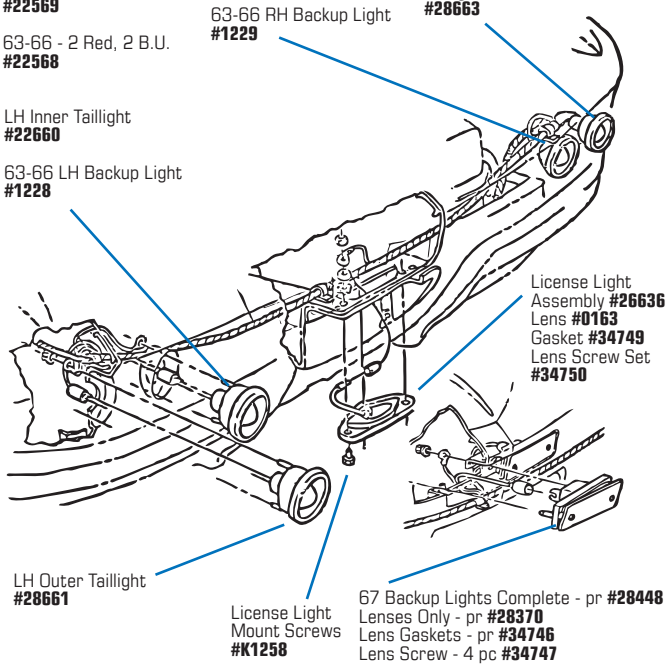

Look for our name on the box!

We provide many of our products to other Corvette parts suppliers.

LOCKS

#32798
1963
Lock Set

Includes:
Ignition, Doors
& Glove Box

#23783 Spare Tire
Lock & Key Set

#23811
1963-66 Door Locks

LOCKS

23811	63-66	Door Locks - pr	$39.99
23812	67	Door Locks - pr	$28.99
28759	63-67	Door Lock Bezel	$9.99
32794	63-67	Door Lock Pawl	$4.99
32795	63-67	Door Lock Pawl Retaining Clips - pr	$1.99
28758	63-67	Door Lock Retainer	$10.99
37295	63	Glove Box Lock	$32.99
23830	64-67	Glove Box Lock	$24.99
34660	63	Glove Box Lock Retainer	$8.99
33248	64-67	Glove Box Lock Retainer	$8.99
23800	63-64	Ignition Lock	$16.99
23801	65	Ignition Lock	$14.99
23802	66-67	Ignition Lock	$16.99
32796	63-66	Key Blank - Hex Head	$3.99
32797	63-66	Key Blank - Round Head	$2.99
33242	67	Key Blank - Hex Head "A"	$4.99
33243	67	Key Blank - Round Head "B"	$4.99
37365	63	Lock Set - Deluxe - Includes: Ignition, Doors, Glove Box and Spare Tire Locks.	$172.99
37366	64	Lock Set - Deluxe - Includes: Ignition, Doors, Glove Box and Spare Tire Locks.	$169.99
37367	65	Lock Set - Deluxe - Includes: Ignition, Doors, Glove Box and Spare Tire Locks.	$169.99
37368	66-67	Lock Set - Deluxe - Includes: Ignition, Doors, Glove Box and Spare Tire Locks.	$169.99
35649	63-64	Lock Set - Ignition & Door	$58.99
37293	65	Lock Set - Ignition & Door	$55.99
37294	66-67	Lock Set - Ignition & Door - 66 Replacement	$48.99
32798	63	Lock Set - Ignition, Doors & Glove Box	$111.99
33244	64	Lock Set - Ignition, Doors & Glove Box	$101.99
33245	65	Lock Set - Ignition, Doors & Glove Box	$99.99
33247	66-67	Lock Set - Ignition, Doors & Glove Box	$70.99
23783	63-67	Spare Tire Lock & Key Set	$91.99
1176	63-67	Spare Tire Lock Dustcover	$8.99

800-458-3475
CorvetteAmerica.com

WARNING: Cancer and Reproductive Harm — www.P65Warnings.ca.gov

#0655 1963 Mirror

#26658 1967
Inside Mirror Bracket Cover

#28623 1963-66
Inside Mirror Bracket

#23772 1967 Mirror Glass - Inside Rear View

#23756
1963-66 Mirror

#39941
1963-66
Chrome
Inside
Mirror

#X2071
Day/Night Mirror

INSIDE & OUTSIDE MIRRORS

0185	63-67	Inside Mirror Anti-Movement Insert	$1.99
39941	63-66	Inside Rear View Mirror - Chrome	$40.99
X2071	63-67	Inside Rear View Mirror - Day / Night - SS - 8" - Replacement	$40.99
0655	63	Mirror - LH w/ Bowtie - 63E	$40.99
23756	63-67	Mirror - LH w/ Bowtie - 63L w/ Mounting Kit	$71.99
23760	63-67	Mirror - LH w/ Bowtie - 63L - 67E w/o Kit	$96.99
0679	67	Mirror - LH w/o Bowtie	$86.99
33249	63-67	Mirror - RH w/ Bowtie & Mounting Kit	$116.99
0678	67	Outside Mirror - RH w/o Bowtie	$75.99

MIRROR HARDWARE

35651	63-67	Mirror Base Gasket	$1.99
K1252	63-67	Mirror Bracket to Door Screws & Nuts Set	$1.99
23759	63	Mirror Mounting Kit, LH Door,63E - Bracket, Gaskets & Screws	$10.99
28623	63-66	Mirror Bracket - Inside Rear View	$55.99
28622	67	Mirror Bracket - Inside Rear View	$55.99
26658	67	Mirror Bracket Cover - Convertible - Silver	$37.99

All Convertibles had Silver bracket cover regardless of interior color.

26637	67	Mirror Bracket Cover - Coupe - Black	$34.99
26639	67	Mirror Bracket Cover - Coupe - Bright Blue	$37.99
26651	67	Mirror Bracket Cover - Coupe - Green	$37.99
26638	67	Mirror Bracket Cover - Coupe - Red	$37.99
26650	67	Mirror Bracket Cover - Coupe - Saddle	$37.99
26652	67	Mirror Bracket Cover - Coupe - Teal	$37.99
26659	67	Mirror Bracket Cover - Coupe - White	$37.99
23772	67	Mirror Glass - Inside Rear View	$20.99
23764	63-67	Mirror Mounting Kit - LH - Door - 63L	$13.99
23757	63	Mirror Reinforcement Plate - 63E - LH	$14.99
23758	63-67	Mirror Reinforcement Plate - 63L - LH	$10.99
37296	63-67	Mirror Repair Kit - Outside Rearview Glass, Snap Ring & Springs	$16.99
K1073	63-67	Mirror Support to Header Screws - pr	$2.99
36830	63-67	Mirror to Support Screw	$2.99
0257	63-67	Screw - Door Mirror to Bracket	$1.99

1963-67 MIRROR MOUNTING

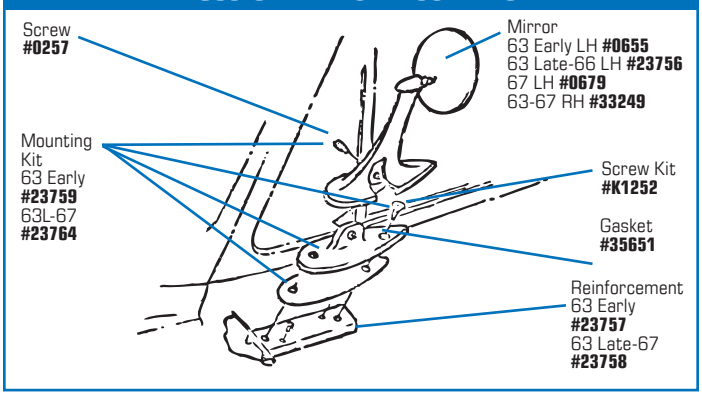

Discounts & Coupons Emailed!
Enter your email address on CorvetteAmerica.com

WARNING: Cancer and Reproductive Harm — www.P65Warnings.ca.gov

EXTERIOR TOUCH-UP PAINT

Heal the nicks and seal the scratches. Our Exterior Touch-Up Paint matches original colors perfectly. Includes a brush for precise application. 1 oz bottle.

63-67 Exterior Touch-Up Paint - Each $24.99

44000	63-67	Black	**Codes 900 / AA / 19 / 41**
44005	63-67	Ermine White	**Codes 936 CC / 972**
44007	63	Satin Silver	**Code 940**
44006	63	Sebring Silver	**Code 941**
44002	63-64	Daytona Blue	**Code 916**
44003	63-64	Riverside Red	**Code 923**
44004	63-64	Saddle Tan	**Code 932**
44001	63-64	Silver Blue	**Code 912**
44014	65	Crocus Yellow	**Code YY**
44009	65	Glen Green	**Code GG**
44013	65	Goldwood Yellow	**Code XX**
44010	65-66	Milano Maroon	**Codes MM / 988**
44008	65-66	Nassau Blue	**Codes FF / 976**
44012	65-68	Rally Red	**Codes UU / 974**
44011	65-67	Silver Pearl	**Codes QQ / 986**
44015	66	Laguna Blue	**Code 978**
44017	66	Mosport Green	**Code 982**
44018	66-67	Sunfire Yellow	**Code 984**
44016	66	Trophy Blue	**Code 980**
44021	67	Elkhart Blue	**Code 980**
44022	67	Goodwood Green	**Code 983**
44020	67	Lynndale Blue	**Code 977**
44019	67	Marina Blue	**Code 976**
44023	67	Marlboro Maroon	**Code 988**

Call Today & SAVE on an Interior Package!

Get discounts on Interiors & Parts when you order an Interior Package!

#1562 Gas Pedal

#1553 Brake/Clutch Pedal Pad

#1554 Power Brake - Manual - Pedal Pad

#22390 1963-66 Clutch Pedal

#1556 Automatic Power Brake Pedal Pad

#34852 1963-66 Automatic Brake Pedal

#1555 Automatic Brake Pad Pedal

PEDALS & PADS

34855	67	Brake Pedal - Auto	$131.99
34852	63-66	Brake Pedal - Manual	$131.99
34854	67	Brake Pedal - Manual	$130.99
28869	63-67	Brake Pedal Bumper	$3.99
29949	63-67	Brake Pedal Pivot Bushing	$2.99
34856	63-67	Brake Pedal Shaft - Automatic	$19.99
29849	63-67	Brake Pedal Shaft Retainer	$2.99
50936	63-67	Clutch/Brake Pedal Pivot Bushings - pr.	$4.99
51446	63-67	Clutch/Brake Pedal Pivot Bushings - 4 pc.	$6.99
22390	63-66	Clutch Pedal	$98.99
22391	67	Clutch Pedal	$103.99
28869	63-67	Clutch Pedal Bumper - Correct	$3.99
22392	63-66	Clutch Pedal Rod Bracket - 327	$34.99
33292	65-66	Clutch Pedal Rod Bracket - 396 & 427	$34.99
22394	67	Clutch Pedal Rod Bracket	$28.99
1562	63-67	Gas Pedal	$19.99
K1207	63-67	Gas Pedal Screws - pr	$2.99
35013	63-67	Gas Pedal Spacer	$5.99
1553	63-67	Pedal Pad - Brake or Clutch	$8.99
1555	63-67	Pedal Pad - Brake - Automatic	$9.99
1556	63-67	Pedal Pad - Power Brake - Automatic	$9.99
1554	63-67	Pedal Pad - Power Brake - Manual	$8.99

800-458-3475
CorvetteAmerica.com

WARNING: Cancer and Reproductive Harm — www.P65Warnings.ca.gov

AM/FM STEREO

Direct Replacement. No Modification. 5 Push Button, CD Changer Compatible w/ CD Changer Control. Rear USB Port, 2 Channel AUX Input.

37942 63-67 Stereo - AM / FM 240 Watt..... $305.99
37944 63-67 Stereo - Bluetooth Interface..... $121.99

CUSTOM FIT 200W STEREO

Aux Port in Back of Stereo For Ipod, MP3 and USB Connections.

46363 63-67 Custom Fit 200W Stereo..... $305.99

USA 240 WATT AM/FM STEREO

AM/FM Stereo, 240 Watts. AUX Input RCA to 1/8" Pin Jack included. Digital Clock Electronic Tuner, 16 Pre-sets, 4 Channel RCA Pre-outs, 4 Way Fader and Power Antenna Lead. If you don't need USB/MP3 or CD changer control this is the model for you. An awesome looking radio at a great price! Radio has no cassette but comes with auxiliary audio input. If you have a portable MP3 player or Satellite radio just plug it into the Aux input and listen to it through this radio.

52057 63-67 USA 240 Watt AM / FM Stereo $203.99

KICK PANEL SPEAKERS

Get more sound quality without cutting or drilling your classic Vette. Custom Autosound's Black ABS Kick Panel Speakers replace your originals without modifications and can be dyed to match your interior.

43389 63-67 Kick Panel Speakers - 80 Watt 4"x 6" 2-Way - pr..$142.99

AM/FM STEREO RADIOS

Maximum power = 180 Watts RMS. Do not use original speakers. Uses original antenna. Fits in dash without any modifications. Chrome plated die-cast nose piece, band selector bar & push buttons look original. Correct Knobs. Slidebar duplicates action of original. 10 presets. Only 3" depth behind dash. Analog controls look & feel like the original radio. All controls easily accessible. LED dial lights will never need replacing. Bluetooth 3.0 EDR compliant. 3.5 mm phone jack for input from iPod or MP3 players. Built in microphone for Hands Free Profile. HSP, A2DP, AVRCP profiles supported. Programmable audio equalizer. Place/answer calls or stream your favorite programs while maintaining original appearance!

45029

45029 63-64 Radio AM / FM Stereo $689.99
45030 65 Radio AM / FM Stereo $689.99
45031 66 Radio AM / FM Stereo $689.99
45032 67 Radio AM / FM Stereo $689.99

KENWOOD FRONT SPEAKERS - 220W CAPACITY

Kenwood quality replacement/upgrade for your original in-dash speakers. They handle up to 220 watts and fit directly under the dash. Each assembly includes two speakers, correct mounting brackets and wiring.

26338 63-67 Kenwood Front Speakers w/o AC $81.99
26339 63-67 Kenwood Front Speakers w/ AC $86.99

FRONT SPEAKERS - 80W CAPACITY

Custom Autosound's front speakers are an excellent replacement for the original in-dash speakers. They handle up to 80 Watts and fit directly under the dash. Each assembly includes two speakers, correct mounting brackets and wiring. **Note**: Will not work with stock radios.

26336 63-67 Custom Autosound Front Speakers w/o AC..... $40.99
26337 63-67 Custom Autosound Front Speakers w/ AC $40.99
42819 63-67 Speaker - 80 Watt Dual Voice Coil $70.99
26340 63-67 Speaker - 20 Watt Kenwood Dual w/ AC..... $81.99

WARNING: Cancer and Reproductive Harm — www.P65Warnings.ca.gov

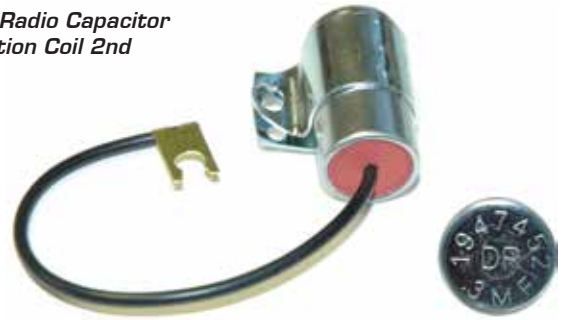

#51540 Radio Capacitor - Ignition Coil 2nd

RADIO CAPACITORS

51541	63-64	Radio Capacitor - Ignition Coil	$20.99
51540	63-67	Radio Capacitor - Ignition Coil 2nd	$20.99
51542	63-65	Radio Capacitor - Voltage Regulator	$20.99
51543	63-67	Radio Capacitor - Ammeter	$42.99
51545	63	Radio Capacitor - Brake Light Switch	$20.99
51546	63	Radio Capacitor - Park Brake Alarm Switch	$20.99
51547	63	Radio Capacitor - Turn Signal Switch	$42.99
51549	64-67	Radio Capacitor - Brake Light Switch	$64.99
51550	64-67	Radio Capacitor - Park Brake Alarm Lamp	$53.99
51551	65-67	Radio Capacitor - Voltage Regulator	$20.99
51552	66-67	Radio Capacitor - Ignition Coil	$20.99

#39566 1965-66 Power Antenna - Concours w/ Hardware

RADIO, ANTENNA & SPEAKERS

20135	63-64	AM / FM Push Button Lens	$29.99
20136	65	AM / FM Push Button Lens	$29.99
20137	66-67	AM / FM Push Button Lens	$29.99
26686	63-67	AM / FM Selector Bar	$23.99
1772	63-64	Antenna w/ Hardware	$45.99
1692	63-67	Antenna Bezel	$9.99
43491	63-66	Antenna Body - 65-66 Manual Replacement	$24.99
37299	63-66	Antenna Cable w/ Correct Nut	$29.99
37300	63-67	Antenna Cable Clips - Underdash - pr	$1.99
29771	63-67	Antenna Cable Grommet - Rear	$6.99
1690	63-67	Antenna Gasket	$2.99
29763	63-66	Antenna Ground Mount Plate	$28.99
29769	63-67	Antenna Ground Strap	$7.99
35173	63-67	Antenna Ground Strap Screw & Washer Set	$6.99
2516	67	Antenna Jam Nut	$5.99
43493	63-66	Antenna Kit - Mast & Body 65-66 Manual Repl	$40.99
43492	63-66	Antenna Mast - 65-66 Manual - Replacement	$24.99
23054	65-66	Antenna Mast - Manual - Replacement	$60.99
29765	63-66	Antenna Mount Spacer - Underbody	$14.99
1658	63-64	Antenna Nut - Chrome	$9.99
35174	63-64	Antenna Nut Spanner Wrench	$9.99
29770	63-64	Antenna Lower Bracket & Clamp Kit	$16.99
1691	65-67	Antenna Hex Nut	$6.99
29772	67	Antenna Assembly - Complete - No Cable	$60.99
32600	67	Antenna Body	$24.99

***#0210** 1964* ***#28706** 1965* ***#0211** 1966* ***#0212** 1967*

22576	67	Antenna Cable	$50.99
29774	67	Antenna Ground Mount Plate	$28.99
2514	67	Antenna Mast	$42.99
1775	63	Dash Indicators - Radio - 2 pc set	$39.99
37304	63-67	Harness - Radio to Speaker Plug - w/ Clip	$6.99
37305	63-67	Harness - Speaker Plug to Speaker	$6.99
39566	65-66	Power Antenna - Concours w/ Hardware	$259.99
51042	63-67	Power Antenna Conversion Harness	$52.99
42378	65-66	Power Antenna Motor Plug	$2.99
29493	65-66	Power Antenna Motor Repair Harness	$19.99
29494	65-66	Power Antenna Motor Switch Harness	$19.99
29766	65-66	Power Antenna Mount Bracket	$24.99
K1388	65-67	Power Antenna Mount Bracket Screw	$2.99
29768	65-66	Power Antenna Mount Bracket Nut Plate	$10.99
1806	65-66	Power Antenna Switch	$101.99
42377	65-66	Power Antenna Switch Plug	$8.99
K1444	65-66	Power Antenna Switch Screws & Nuts - 4 pc set	$1.99
42374	63-67	Radio Bracket - w/ Rivets	$8.99
42375	63-67	Radio Bumper	$0.99
37302	63-64	Radio Dial Overlay w/ Numbers	$16.99
37303	65-67	Radio Dial Overlay w/ Numbers	$16.99
0210	64	Radio Knob - Set Screw Type	$22.99
28706	65	Radio Knob	$22.99
0211	66	Radio Knob	$24.99
0212	67	Radio Knob	$27.99
42373	63-67	Radio Mounting Screw	$1.99
25825	63	Radio Power Lead	$29.99
25826	64-67	Radio Power Lead	$29.99
34751	63-67	Radio Stem Nuts - pr	$2.99
34752	63-67	Radio Stem Washers - pr	$0.99
0501	63-67	Radio Surround Bezel	$19.99
0246	63-65	Radio Volume & Tuner Spacers - pr	$16.99
0249	66-67	Radio Volume & Tuner Spacers - pr	$16.99
0550	63-67	Speaker Grille	$77.99
K1343	63-67	Speaker Grille Speednuts - 6 pc set	$1.99
K1376	63-67	Speaker Mounting Bolts - Front - pr	$2.99
1610	63-67	Speaker 6x9 Oval w/ Coil 8-10 Ohm	$69.99
20134	63	"Wonderbar" Radio Lens	$29.99

custom autosound

SOUNDBAR SYSTEM - 3" DEEP

Custom-fit cargo area speaker features pressure-fit installation and 200-watts of power. Metal assembly with two 4" bass reflex speakers and two mids and tweeters. Can be dyed to match your interior. Will Not Work In Convertible

26328	63-67	Soundbar System	$129.99

800-458-3475
CorvetteAmerica.com

WARNING: Cancer and Reproductive Harm — www.P65Warnings.ca.gov

#28449 *#28451*

Radio Face Kit

28449 63-64 Radio Face Kit - AM / FM - Includes: Chrome Face Plate w/ new lens, slide selector & push buttons **$148.99**

28450 65 Radio Face Kit - Includes: Chrome Face Plate w/ new lens, slide selector & push buttons.....**$148.99**

28451 66-67 Radio Face Kit - Includes: Chrome Face Plate w/ new lens, slide selector & push buttons.....**$148.99**

1963-64 ANTENNA

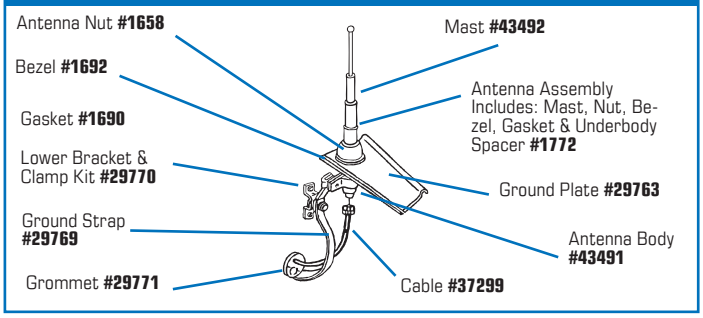

1965-66 POWER ANTENNA

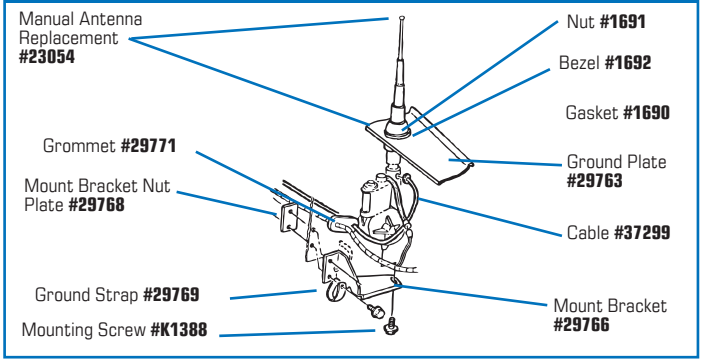

1967 ANTENNA

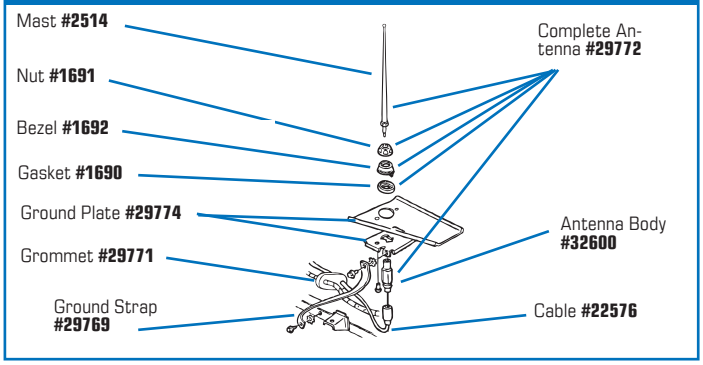

Discounts & Coupons Emailed!

Enter your email address on CorvetteAmerica.com

1966 Laguna Blue Stingray Roadster

327 ci, 300 Hp, 4 speed Muncie, 4-Wheel Factory Disc Brakes, Power Brakes, AM/FM, 7,890 original miles at time of restoration. Corvette America provided many of the parts for this Corvette!

Thank You, Kyle M. for sending us photos of your Vette.

#20802 1963 3 Speed Shifter | *#20808 1963 4 Speed Shifter* | *#20809 1964-67 4 Speed Shifter*

MANUAL SHIFTER

20802	63	Shifter - 3 Speed	$392.99
33261	64-67	Shifter - 3 Speed w/ Knob	$379.99
20808	63	Shifter - 4 Speed	$470.99
20809	64-67	Shifter - 4 Speed	$267.99
35665	63	Shifter Adjustment Gauge Block - 4 Speed	$8.99
37306	64-67	Shifter Adjustment Gauge - 4 Speed	$1.99
32817	63	Shifter Anti-rattle Spring	$7.99
32811	63	Shifter Anti-rattle Spring Bracket - 4 Speed	$10.99
20812	63-67	Shifter Bushing Set - Hurst - 4 Speed - 6 pc	$10.99
35193	63-64	Shifter Clevis Spring Washer	$1.99
25647	63	Shifter Handle - Manual - Hurst Style	$111.99
35668	63	Shifter Handle - 4 Speed - Stock	$218.99
25645	64-67	Shift Handle w/ Knob & Reverse Lockout - Hurst Fits Hurst Competition Plus Shifter w/ 2-Bolt Handle Design. Gives appearance of stock shifter. Not for use w/ Automatic	$96.99
42388	64-67	Shifter Housing - Lower	$21.99
42387	64-67	Shifter Housing - Upper	$40.99
42389	64-67	Shifter Lever - Reverse	$15.99
42392	64-67	Shifter Lever - 1st & 2nd	$15.99
42393	64-67	Shifter Lever - 3rd & 4th	$15.99
20830	63	Shifter Linkage - 3 Speed	$97.99
20837	63	Shifter Linkage - 4 Speed - Borg-Warner	$151.99
20838	63	Shifter Linkage - 4 Speed - Muncie	$147.99
20839	64-67	Shifter Linkage - 4 Speed	$87.99
35192	63-64	Shifter Mount Bolt Set - 63 All, 64 Auto	$4.99
33255	64-67	Shifter Mount Bolt Set - 4 Speed	$1.99
28452	64-66	Shifter Mount Bracket - 4 Speed - 66E	$22.99
28454	66-67	Shifter Mount Bracket on Frame - Manual - 66L	$44.99
K1385	64-65	Shifter Mount Bracket Bolt Set - 3 pc	$3.99
28455	66-67	Shifter Mount Bracket Bolt Set	$2.99
42384	64-67	Shifter Pivot Shaft	$8.99
42385	64-67	Shifter Pivot Shaft Retainer Clip	$1.09
39874	64-67	Shifter Repair Kit - 4 Speed	$68.99
42390	64-67	Shifter Reverse Interlock - 5 / 64"	$9.99
42391	64-67	Shifter Reverse Interlock - 7 / 64"	$9.99
28771	63	Shifter Reverse Lockout Handle w/ Cable - 4 spd	$82.99
1298	64-67	Shifter Reverse Lockout Handle w/ Pin - 4 Speed	$35.99
33258	64-67	Shifter Rev. Lockout Handle Bushings - 4 spd - pr	$2.99
33257	64-67	Shifter Reverse Lockout Handle Spring - 4 Speed	$4.99
35194	64-67	Shifter Reverse Lockout Handle Spring Washer	$2.99
42383	64-67	Shifter Reverse Lockout Pin	$3.99
33256	64-67	Shifter Reverse Lockout Rod - 4 Speed	$4.99
1297	64-67	Shifter Reverse Lockout T-Handle only	$17.99
42382	64-67	Shifter Shaft - 4 Speed	$207.99
42386	64-67	Shifter Shaft Lower Pin	$3.99

1963-67 MANUAL SHIFTER

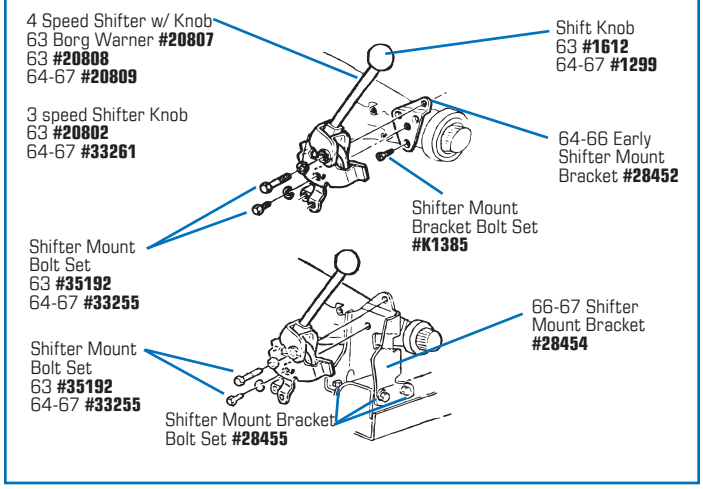

1964-67 SHIFTER COMPONENTS

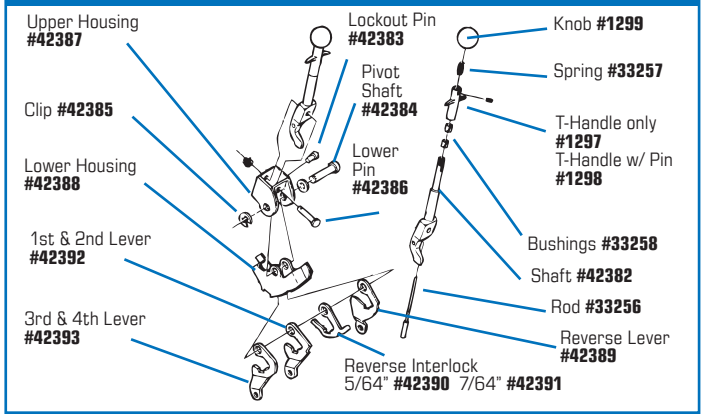

1963-67 AUTOMATIC SHIFTER

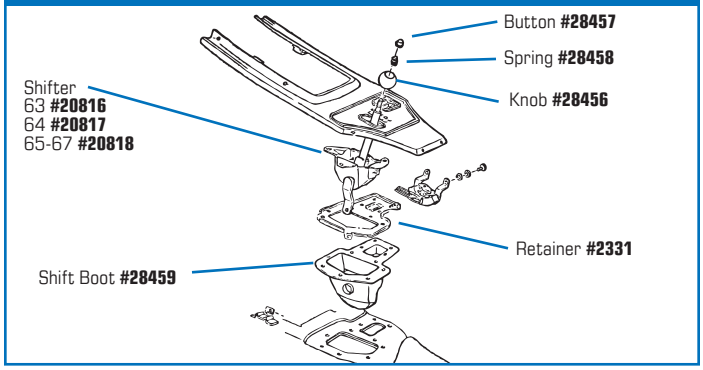

800-458-3475
CorvetteAmerica.com
WARNING: Cancer and Reproductive Harm — www.P65Warnings.ca.gov

#25645 1964-67
Hurst Shift Handle

#20818 1965-67
Automatic Shifter

#28771 1963
Shifter Reverse Lockout Handle

#29145 1964-67
4 Speed Backup Light Switch

#1297 1964-67 Shifter
Reverse Lockout T-handle

#1298 1964-67
Shifter Reverse
Lockout Assembly

Automatic Shifter

20816	63	Automatic Shifter	$321.99
20817	64	Automatic Shifter	$328.99
20818	65-67	Automatic Shifter - Rebuilt Original	$396.99
K1361	65-67	Neutral Safety / Backup Light Switch Screws - pr.	$1.99
35198	65-67	Neutral Safety / Backup Light Switch Wire S-Clip	$9.99
28459	65-67	Shifter Boot - Lower - Automatic	$91.99
2331	64-67	Shifter Boot Retainer	$18.99
42394	65-67	Shifter Bushings - Automatic - pr	$10.99
28457	65-67	Shifter Knob Push Button	$8.99
28458	65-67	Shifter Knob Push Button Spring	$2.99
35197	65-67	Shifter to Linkage Rubber Grommet	$11.99
20828	63-64	Shifter Linkage - Automatic	$50.99
20829	65-67	Shifter Linkage - Automatic	$41.99
35192	63-64	Shifter Mount Bolt Set - 63 All, 64 Auto	$4.99
K1362	65-67	Shifter Mount Bolt Set - Auto	$1.99

#29895
1963 Shifter Boot

#1295
4 Speed Shifter Boot

#2331
Shift Boot Retainer

#X2179 1964-67
3 or 4 Speed Shift Boot

Shift Boots

29895	63	Shifter Boot - 3 Speed & Auto	$51.99
1295	63	Shifter Boot - 4 Speed.	$40.99
X2179	64-67	Shifter Boot - 3 Speed or 4 Speed	$25.99
29896	63	Shifter Boot Retainer	$30.99
2331	64-67	Shifter Boot Retainer	$18.99

#52272 1965-67
Chrome Shifter Knob Kit

#52273 1965-67
Black Plastic Shifter Knob Kit

MADE BY Corvette America

Shifter Knobs

1612	63	Shifter Knob - Black	$10.99
1299	64-67	Shifter Knob - Manual - Chrome	$14.99
33263	64	Shifter Knob - Automatic - Chrome	$50.99
29834	65-67	Shifter Knob - Automatic - Chrome	$20.99
28456	65-67	Shifter Knob - Automatic - Black Plastic	$14.99
52272	65-67	Shifter Knob Kit - Automatic - Chrome	$25.99
52273	65-67	Shifter Knob Kit - Automatic - Black Plastic	$25.99

FAST Shipping!

Fast Service & Delivery
Most orders are processed & shipped the same day!

WARNING: Cancer and Reproductive Harm — www.P65Warnings.ca.gov

Serving the Corvette Community Since 1977.

#53050

HURST SHIFTER COMPONENTS

53043 63-67 Shifter Linkage - Hurst - 4 Speed Muncie..... $219.99
53050 63-67 Shifter - Manual Shifter - Hurst Competition Plus - C2 w/ 451 Muncie Trans $419.99

#53043

CLUTCH

39650 66-67 Bell Housing F/11" Clutch 66-74 BB, 69-81 SB . $234.99
33270 63-67 Bell Housing Bolt Set 327 - 6 pc - "M"..... $7.99
39651 66-67 Clutch Ball Stud - 1.5"..... $8.99
32370 63-66 Clutch Cross Shaft - 327 ..... $81.99
31182 65-66 Clutch Cross Shaft - 396 & 427 ..... $81.99
29957 67 Clutch Cross Shaft $76.99
29959 63-67 Clutch Cross Shaft Bracket - Weld to Frame $19.99
29965 63-67 Clutch Cross Shaft Felt Seal..... $1.99
29946 63-67 Clutch Cross Shaft Rebuild Kit..... $12.99
29958 63-67 Clutch Cross Shaft Red Plug Grease Fitting Hole... $3.99
29964 63-67 Clutch Cross Shaft Seat Retainer Spring $2.99
37315 63 Clutch Fork $108.99
29969 64-67 Clutch Fork - Reproduction $92.99
32371 63 Clutch Fork Anti-Rattle Spring $6.99
28795 64-67 Clutch Fork Anti-Rattle Spring $3.99
43410 63-67 Clutch Fork Boot - Reproduction $14.99
1168 63-67 Clutch Fork Boot - Replacement..... $6.99
28797 63-67 Clutch Fork Pivot Pin..... $1.99
28799 63-67 Clutch Fork Pivot Stud $8.99
31185 64-66 Clutch Fork Push Rod - 327..... $15.99
29968 65-67 Clutch Fork Push Rod - 65-66 BB & 67 all $15.99
37313 63-67 Clutch Hole Plug - Automatic $1.99
33288 63-67 Clutch Housing Inspection Cover - 327 & 396..... $22.99
33289 66-67 Clutch Housing Inspection Cover - 427 ..... $32.99
32836 63-66 Clutch Housing Inspection Cover Bolt Set $3.99
33290 67 Clutch Housing Inspection Cover Bolt Set $6.99
31177 63-64 Clutch Kit - 327, 10 Spline - 10" Diameter. $189.99
50951 65-67 Clutch Kit - 327, 10 Spline - 10.5" Diameter. $193.99
43927 63-67 Clutch Kit - 10 Spline - 10.5" Diameter. $172.99
43929 65-67 Clutch Kit - 10 Spline - 11" Diameter. $183.99
22390 63-66 Clutch Pedal..... $98.99
22391 67 Clutch Pedal..... $103.99

#29969 1964-67 Clutch Fork

MADE BY Corvette America

#43410 Reproduction Clutch Fork Boot

#35688 Clutch Pilot Bearing - Roller Type

29949 63-67 Clutch Pedal Pivot Bushing $2.99
31178 63-65 Clutch Pedal Push Rod - 327 ..... $29.99
31179 65-67 Clutch Pedal Push Rod - 396 & 66-67 all $29.99
1663 63-65 Clutch Pedal Push Rod Boot - 65 E - 2 Hole $7.99
1664 65-67 Clutch Pedal Push Rod Boot - 65 L - 3 Hole $11.99
33294 63-65 Clutch Pedal Push Rod Boot Retainer w/ Screws - 65 E..... $8.99
35178 65-67 Clutch Pedal Push Rod Boot Retainer w/ Screws - 65 L..... $6.99
K1335 65-67 Clutch Pedal Push Rod Boot Screws - 3 pc set..... $1.99
22392 63-66 Clutch Pedal Push Rod Bracket - 327 ..... $34.99
33292 65-66 Clutch Pedal Push Rod Bracket - 396 & 427..... $34.99
22394 67 Clutch Pedal Push Rod Bracket..... $28.99
35177 63-66 Clutch Pedal Push Rod Bracket Bolt Set $1.99
29848 63-67 Clutch Pedal Push Rod Spacer $1.99
29954 63-67 Clutch Pedal Push Rod Swivel $4.99
K1269 63-67 Clutch Pedal Push Rod Swivel Nuts - pr $1.99
35176 63-67 Clutch Pedal Shaft $19.99
29849 63-67 Clutch Pedal Shaft Retainer..... $2.99
35688 63-67 Clutch Pilot Bearing - Roller Type $13.99
35690 63-67 Clutch Fork Spring - Rivets-Fork..... $17.99
35687 63-67 Clutch Pilot Bushing..... $8.99
29966 63-67 Clutch Pivot Stud to Engine $17.99
29961 63-67 Clutch Pivot Stud to Frame $8.99
35175 63-67 Clutch Pivot Stud Nut $0.99
29956 63-67 Clutch Pivot Stud Lock Washer..... $1.99
29963 63-67 Clutch Pivot Stud Nylon Seat $1.99
29847 63-67 Clutch Release Throw Out Bearing $24.99
32369 63-67 Clutch Return Spring $4.99
33297 63-66 Clutch Return Spring Bracket on Firewall..... $10.99
33298 67 Clutch Return Spring Bracket on Firewall..... $8.99
28798 63-67 Clutch Rod "G" Clip $1.09
33293 63-67 Firewall Hole Plug - 4 spd - Hole above clutch pedal. $1.99
36849 66-67 Flywheel - Auto..... $28.99
36846 65-67 Flywheel - Heavy Duty - 396, L88 ..... $152.99
36847 66-67 Flywheel - 327 / 350 Manual..... $129.99
44622 63-67 Flywheel Bolt - Flywheel to Crank - 7/16 - 20 x 1" .. $0.99
36854 66-67 Flywheel Ring Gear - 168 Teeth..... $24.99
51212 63-67 Flywheel Shim - .025" $8.99
51214 63-67 Flywheel Shim - .050" $8.99
51213 63-67 Flywheel Shim - .089" $8.99
35685 63-67 Flywheel to Crankshaft Bolts - 6 pc set $12.99
42992 63-67 Positraction Clutch Kit..... $177.99
K1465 63-67 Pressure Plate to Flywheel Bolts - 6 pc set $11.99

800-458-3475
CorvetteAmerica.com
WARNING: Cancer and Reproductive Harm — www.P65Warnings.ca.gov

#43927
Clutch Kit - 10.5" Diameter

#31177 1963-67 Clutch Kit - 283/327 - 10.5" Spline

#39650 1966-67 Bell Housing

#33289
1966-67
Clutch Housing Inspection Cover - 427

1963-67 CLUTCH

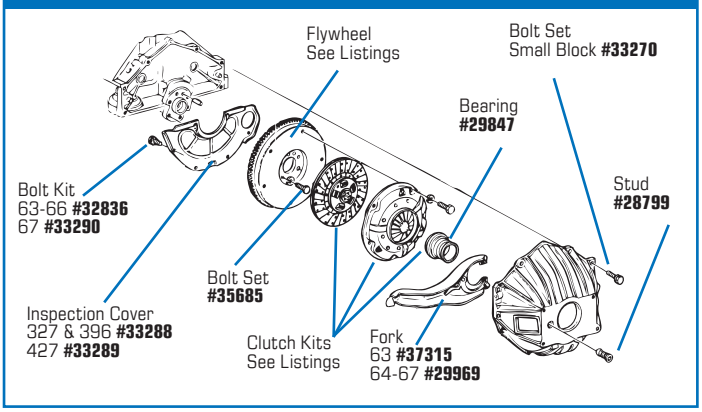

#22390
1963-66 Clutch Pedal

1963-67 CLUTCH

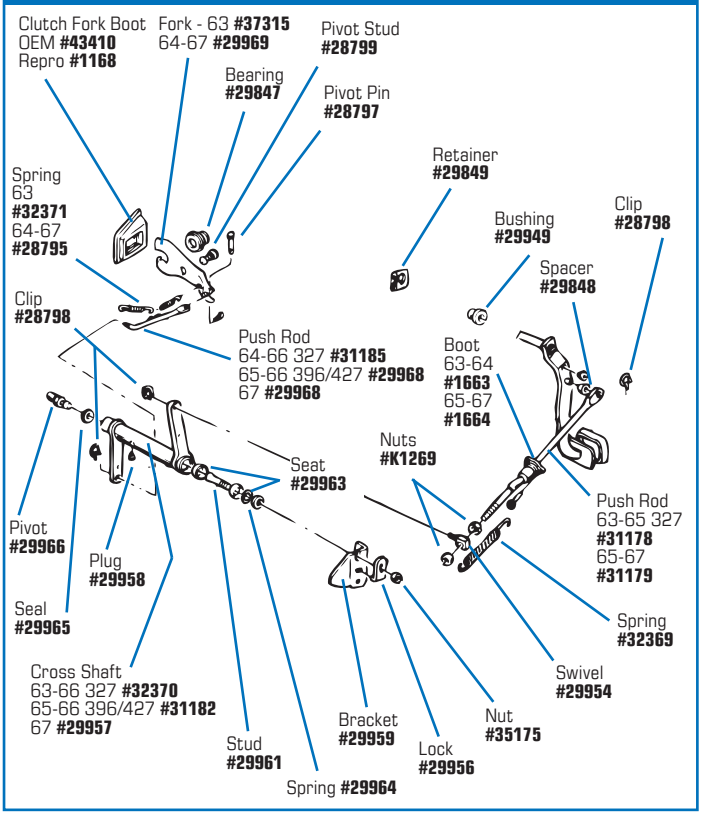

#36847 1966-67
Flywheel - 327 / 350

#29957 1966-67
Clutch Cross Shaft

#1664 1965-67
Clutch Rod Boot on Firewall

#42992 1965-67
Positraction Clutch Kit

Discounts & Coupons Emailed!
Enter your email address on CorvetteAmerica.com

#32838
Auto Transmission Underpan - 327

#35670 1963
Shift Lever on Trans.
4 spd Borg Warner 1st & 2nd

#35182 1964-67
Shift Rod Clevis - 1st & 2nd

4 SPEED TRANSMISSION

35676	63	Shift Lever Linkage Clevis - 4 spd	$18.99
35677	63	Shift Lever on Trans - 3 spd - Rev & 1st	$55.99
35678	63	Shift Lever on Trans - 3 spd - 2nd & 3rd	$55.99
35670	63	Shift Lever on Trans - 4 spd BW - 1st & 2nd	$20.99
35671	63	Shift Lever on Trans - 4 spd BW - 3rd & 4th	$22.99
35672	63	Shift Lever on Trans - 4 spd BW - Reverse	$22.99
35673	63	Shift Lever on Trans - 4 spd Muncie - 1st & 2nd	$17.99
35674	63	Shift Lever on Trans - 4 spd Muncie - 3rd & 4th	$22.99
35675	63	Shift Lever on Trans - 4 spd Muncie - Reverse	$17.99
35189	64-67	Shift Lever on Trans - 1st & 2nd	$14.99
35190	64-67	Shift Lever on Trans - 3rd & 4th	$14.99
35191	64-67	Shift Lever on Trans - Reverse	$14.99
K1363	64-67	Shift Lever Retaining Nuts - 3 pc	$1.99
35181	64-67	Shift Rod w/ Clevis - 1st & 2nd	$31.99
35185	64-67	Shift Rod - 3rd & 4th	$21.99
35184	64-67	Shift Rod - Reverse	$21.99
35182	64-67	Shift Rod Clevis - 1st & 2nd	$10.99
35187	64-67	Shift Rod Clevis Pin w/ Cotter Pin	$1.99
35180	64-67	Shift Rod Clevis / Swivel Locknut	$2.99
28798	63-67	Shift Rod Retainer "G" Clip	$1.09
35183	64-67	Shift Rod Swivel - 3rd & 4th	$7.99
35179	64-67	Shift Rod Swivel - Reverse	$7.99
K1364	64-67	Shift Rod Swivel Washers - pr	$1.99
42380	63-67	Shifter Shaft Seal - Muncie 63L	$10.99
42381	63-67	Shifter Cam Detent Spring - 63L	$5.99
32823	63-67	Transmission to Bell Housing Bolt Set - 4 pc	$6.99

1964-67 4 SPEED TRANSMISSION

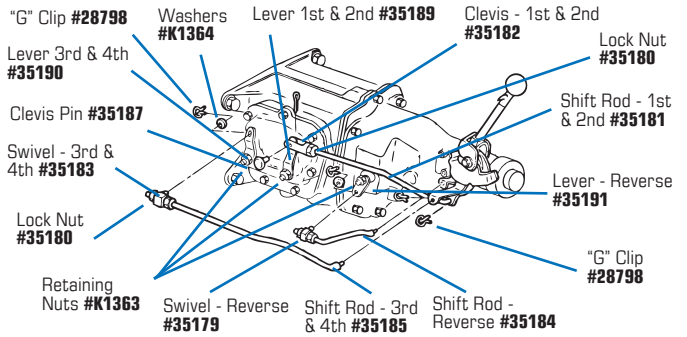

TRANSMISSION MOUNTING

K1439	63-67	Auto Transmission to Engine Bolts - 6 pc set	$5.99
51223	63-67	Auto Transmission Bushing - Front or Rear	$3.99
51233	63-67	Auto Transmission Flex Plate - HP Engine	$50.99
51210	63-67	Auto Transmission Ring Gear	$22.99
51220	65-67	Auto Transmission Shift Improvement Kit	$35.99
32838	63-67	Auto Transmission Underpan	$55.99
35684	63-67	Auto Transmission Underpan Bolts - 4 pc set	$4.99
33269	64-67	Front Drive Shaft Yoke U-bolt Kit	$12.99
33274	63-66	Powerglide Dipstick - 327 - Long Handle	$73.99
33277	66	Powerglide Dipstick - 427 - to April 66	$26.99
33278	66-67	Powerglide Dipstick - 427 - Short Handle	$52.99
33276	63-67	Powerglide Dipstick Tube - 327	$31.99
32826	63-67	Powerglide Filter & Gasket Kit	$9.99
42481	63-67	Powerglide Inspection Pan - Exc 67 427	$84.99
42483	63-67	Powerglide Rear Bearing Seal	$8.99
29835	63-67	Transmission Mount	$12.99
35224	63-67	Transmission Mount Bolt & Nut	$1.99
33266	63-67	Transmission Mount To Trans Bolt / Washer set	$1.99
28464	63-67	Transmission Mount to Bracket Bolt set	$5.99
28463	63-67	Transmission Mount Bracket	$54.99
K1352	63-67	Transmission Mount Bracket to Frame Bolt Kit	$3.99
42479	63-67	Transmission To Engine Bolt Set - Powerglide	$2.99

1963-67 TRANSMISSION MOUNTING

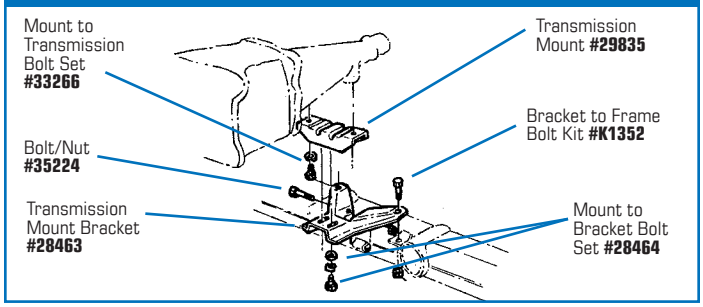

SPEEDOMETER GEARS

32828	63-67	Speedo Drive Gear - 18 Tooth - Brown - 3.08	$7.99
33999	63-67	Speedo Drive Gear - 19 Tooth - Natural	$7.99
32829	63-67	Speedo Drive Gear - 20 Tooth - Blue - 3.36	$10.99
32830	63-67	Speedo Drive Gear - 21 Tooth - Red - 3.55	$8.99
32831	63-67	Speedo Drive Gear - 22 Tooth - Grey - 3.70	$8.99
34001	63-67	Speedo Drive Gear - 23 Tooth - 4 Speed	$23.99
32832	63-67	Speedo Drive Gear - 24 Tooth - Yellow - 4.11	$9.99
33439	63-67	Speedo Drive Gear - Metal - 3.08 - 3.55	$40.99
33997	65-67	Speedo Gear Fitting - 4 spd Muncie	$21.99
32834	63-67	Speedo Gear Fitting Retainer	$6.99
33998	63-67	Speedo Gear Fitting Seal -11/16"	$1.99

1963-67 SPEEDOMETER GEARS

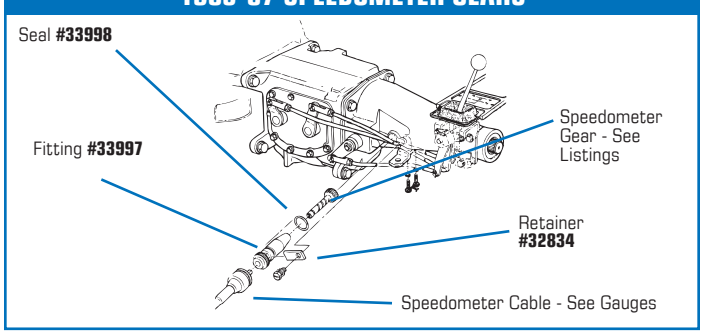

Discounts & Coupons Emailed!
Enter your email address on CorvetteAmerica.com

WARNING: Cancer and Reproductive Harm — www.P65Warnings.ca.gov

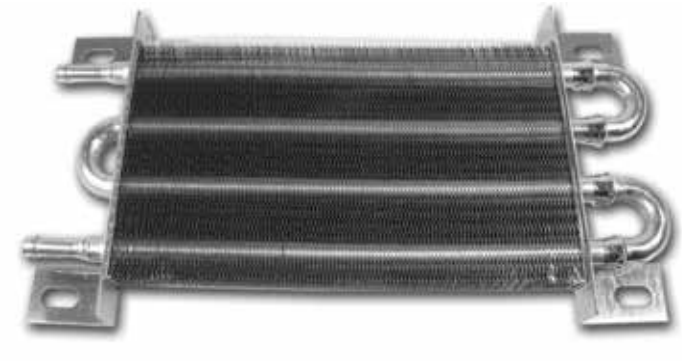

#35225 1963-67 Automatic Transmission Cooler

#32829 Speedometer Drive Gear - 20 Tooth

#33991 1966-67 Auto Trans. Cooler Pipe

#33272 1963-67 Automatic Transmission Cooling Lines

1963-67 AUTOMATIC TRANSMISSION COOLING LINES

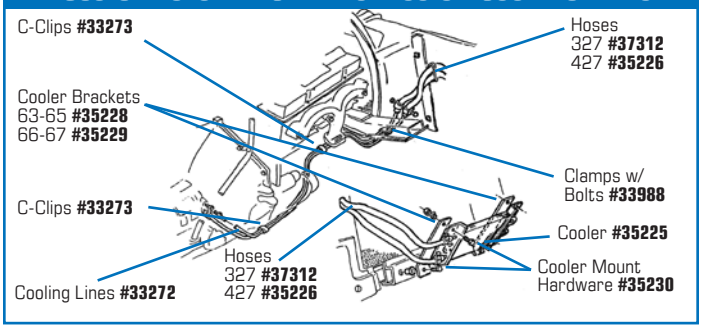

Cooling Lines

35225	63-67 Auto Trans Cooler - 327 - Replacement	$104.99
35228	63-65 Auto Trans Cooler Brackets - 327 - pr	$13.99
35229	66-67 Auto Trans Cooler Brackets - 327 - pr	$13.99
35230	63-67 Auto Trans Cooler Mounting Hardware Set	$8.99
33272	63-67 Auto Trans Cooling Lines - pr	$65.99
33273	63-67 Auto Trans Cooling Line "C" Clips - 3 pc set	$8.99
33988	63-67 Auto Trans Cooling Line Clamps w/ Bolt	$3.99
37312	63-67 Auto Trans Cooling Line Hoses - 327 - pr	$25.99
35226	66-67 Auto Trans Cooling Line Hoses - 427 - pr	$25.99
33991	66-67 Auto Trans Cool. Pipe on Rad. - 427 - Upr or Lwr	$19.99

1965-67 AUTOMATIC TRANSMISSION KICKDOWN LINKAGE

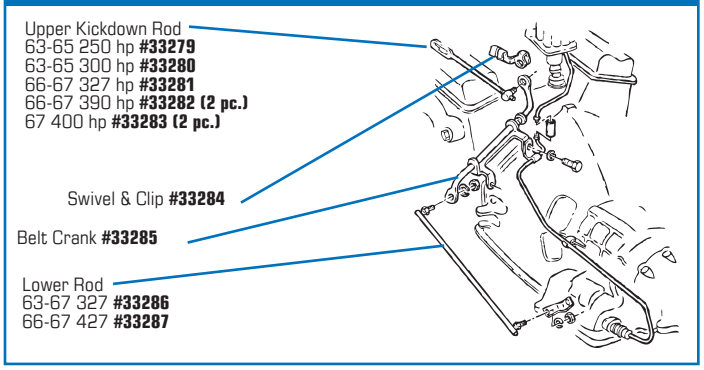

Kickdown Linkage

33285	63-67 Kickdown Bell Crank Assembly	$61.99
37307	65-67 Kickdown Linkage Splash Shield	$187.99
33286	63-67 Kickdown Rod - Lower - 327	$39.99
33287	66-67 Kickdown Rod - Lower - 427	$39.99
33279	63-65 Kickdown Rod - Upper - 250 hp	$45.99
33280	63-65 Kickdown Rod - Upper - 300 hp	$45.99
33281	66-67 Kickdown Rod - Upper - 327	$41.99
33282	66-67 Kickdown Rod - Upper - 427 / 390 - 2 pc	$101.99
33283	67 Kickdown Rod - Upper - 427 / 400 - 2 pc	$101.99
33284	63-67 Kickdown Rod Swivel & Clip - 327 - Upper Rod	$9.99
42478	66-67 Kickdown Swivel Stud - On Carb - Auto	$10.99
51238	63 Modulator Valve - 63 E	$19.99
37310	63-67 Modulator Valve - 63 L - Small Block	$24.99
51222	65-67 Modulator Valve - Big Block	$19.99
37311	63-67 Modulator Valve Gasket	$1.99

#28462 1965-67 Rebuild Kit - Muncie - 1" Cluster Gear C/ Shaft

Transmission Rebuild Kits

Our kits include main bearings, synchro rings, gaskets, seals, counter-shaft and related small parts such as needle bearings, snap rings, tail-shaft bushing, thrust washers, shims, roll pins, shift keys and springs. All meet or exceed OEM specs.

33978	63 Rebuild Kit - T-10	$264.99
28461	64-65 Rebuild Kit - Muncie - 7/8" Cluster Gear C/Shaft	$273.99
28462	65-67 Rebuild Kit - Muncie - 1" Cluster Gear C/Shaft	$273.99
40966	66-67 Rebuild Kit - Saginaw - 3 spd	$223.99

Look for our name on the box!

We provide many of our products to other Corvette parts suppliers.

WARNING: Cancer and Reproductive Harm — www.P65Warnings.ca.gov

#42397 1963 Transmission Tag

TRANSMISSION TAGS

Stamped metal tag mounts under lower front side cover bolt of transmisson.

42395	63	3819107W T-10 - 3 spd - 63E	$28.99
42396	63	3839724W T-10 - 4 spd Wide Ratio - 63E	$28.99
42397	63	3839723W T-10 - 4 spd Close Ratio - 63E	$28.99
35200	63	3839715 Muncie - 3 spd - After # 12000	$28.99
35201	63	3831703 Muncie - 4 spd - Wide Ratio 250 & 300 hp - After # 12000	$28.99
35202	63	3831701 Muncie 4 spd - Close Ratio 340 & 360 hp - After # 12000	$28.99
35203	64	3855707 - 3 spd	$28.99
35204	64	3839602 - 4 spd - Wide Ratio - 250 & 300 hp	$28.99
35205	64	3839601 - 4 spd - Close Ratio - 365 & 375 hp	$28.99
35206	65	3855707 - 3 spd - 250 hp	$28.99
35207	65	3857580 - 4 spd M20 Wide Ratio 250 & 300 hp	$28.99
35208	65	3857573 - 4 spd M20 Close Ratio 365 & 375 hp	$28.99
35209	65	3857579 - 4 spd M20 - Close Ratio - 350 hp	$28.99
35210	65	3857581 - 4 spd M20 Close Ratio 396 / 425 hp	$28.99
35220	65	3879986 - 4 spd M22 - 365 & 375 hp	$28.99
35214	65-66	3879987 - 4 spd M22 - 425 hp	$28.99
35211	66	3860097 - 3 spd - 300 hp	$28.99
35212	66	3870354 - 4 spd M20 - Wide Ratio - 300 hp	$28.99
35213	66	3880853 - 4 spd M21 - Close Ratio - 350 hp	$28.99
35221	66	3880855 - 4 spd M21 Close Ratio 390 & 425 hp	$28.99
35215	67	3860097 - 3 spd - 300 hp	$28.99
35216	67	3870354 - 4 spd M20 - Wide Ratio - 300 hp	$28.99
35217	67	3880853 - 4 spd M21 - Close Ratio - 350 hp	$28.99
35218	67	3880855 - 4 spd M21 - Close Ratio - 390, 400 & 435 hp	$28.99
35219	67	3879987 - 4 spd M22 - 430 hp L88	$28.99

#X2593 1963-67 Transmission Slip Yoke - 26 Spline

#33972 1963-67 Transmission Front Bearing Retainer - 4 Speed

ADDITIONAL TRANSMISSION ITEMS

33269	64-67	Drive Shaft Front Yoke U-Bolt Kit	$12.99
33972	63-67	Front Bearing Retainer - 4 spd	$44.99
35222	64-67	Front Bearing Retainer Bolt Set	$4.99
35223	64-67	Front Bearing Retainer French Locks - pr	$10.99
32819	63	Gasket Set - 4 spd Borg Warner	$18.99
32820	65-67	Gasket Set - 3 spd Saginaw	$19.99
33265	63-67	Gasket Set - 4 spd Muncie	$24.99
42404	64-67	Transmission Front Bearing Locator Ring	$3.99
42400	63	Transmission Front Main Shaft Bearing - 63L	$16.99
42401	64-67	Transmission Front Main Shaft Bearing	$30.99
42407	63-67	Transmission Front Main Shaft Nut - 63L	$19.99
25794	64-67	Transmission Ignition Amplifier Ext. Retainer	$13.99
42406	63	Transmission Main Shaft Rear Bearing - 63E	$16.99
42399	63-67	Transmission Rear Shaft Bushing	$5.99
42398	63-67	Transmission Rear Shaft Seal	$10.99
42408	63-67	Transmission Reverse Detent Ball	$1.99
42409	63-67	Transmission Reverse Detent Spring	$5.99
42410	63-67	Transmission Side Cover Detent Spring - Muncie	$5.99
X2593	63-67	Transmission Slip Yoke - 26 Spline w/ Hardware	$133.99
X2615	63-67	Transmission Yoke Hardware Kit	$4.99
1823	63-67	Tunnel Insulation	$47.99
X2447	63-67	Tunnel Insulation Clip - 4 req'd	$1.99
X2551	63-67	Tunnel Insulation Clips - 4 pc set	$7.99
36836	63-67	Tunnel Insulation Clip Rivets - 8 pc set	$1.99

Discounts & Coupons Emailed!

Enter your email address on CorvetteAmerica.com

SILL PLATES

1963-64

1965-66

1967

Correct number of Ribs just like the originals!

SILL PLATES

34779	63-67	Carpet Support Clip - 14 req'd	$4.99
34780	63-67	Carpet Support Clip Rivets - 14 pc	$4.99
52289	63-67	Carpet Support Clip Rivets - 28 pc	$61.99
42411	63-67	Door Sill Plugs - Coupe - Under Sill - pr	$4.99
X2442	63-64	Sill Plate	$20.99
X2443	65-66	Sill Plate	$20.99
X2444	67	Sill Plate	$25.99
K1070	63-64	Sill Plate Screw Set - 8 pc	$3.99
K1071	65-67	Sill Plate Screw Set - 12 pc	$3.99
28442	63-64	Wire Cover Floor Plates - pr	$32.99
28443	65-67	Wire Cover Floor Plates - pr	$32.99

WARNING: Cancer and Reproductive Harm — www.P65Warnings.ca.gov

See **Interiors** for Convertible Tops

#33302 1963-67 Rear Softtop Bow

SOFTTOP FRAME & COMPONENTS

Exact reproductions of the originals, our softtop frames are completely new and they're finished with black powder coating for long-lasting protection. Convertible top, mounting hardware, weatherstrip, top pads and straps must be ordered separately.

33299	63-67 Front Softtop Bow	$397.99
33301	63-67 Front Softtop Bow Retainer Plate & Screw Kit	$55.99
33302	63-67 Rear Softtop Bow	$400.99
23099	63-67 Softtop Frame - New	$2509.99
33303	63-67 Softtop Frame Rebuild Hardware Kit	$52.99
K1285	63-67 Softtop Mounting Screw Set	$4.99
28899	63-67 Softtop Mounting Screw Set - w/ ELH Stamp	$10.99
K1267	63-67 Softtop Pad to Frame Screws & Washers - 16 pc	$3.99
42413	63-67 Softtop Rear Bow Screw Set	$6.99
33304	63-67 Softtop Strap Retainer & Screws - pr	$16.99
1300	63-67 Softtop Guide Pins - pr	$18.99
1722	63-67 Softtop Guide Pin Bushings - Nylon - pr	$4.99
35231	63-67 Softtop Guide Pin Screws - pr	$2.99
1163	63-67 Softtop Header Latch - LH	$121.99
1164	63-67 Softtop Header Latch - RH	$121.99
X2506	63-67 Softtop Header Latch Plates - CA - pr	$40.99
23541	63-67 Softtop Header Latch Plate Screws - 4 pc	$6.99
46306	63-67 Softtop Rear Latch Bushings - pr	$20.99
1665	63-67 Softtop Rear Latch Gaskets - pr	$4.99
31188	63-67 Softtop Rear Latch Retainer	$8.99
35232	63-67 Softtop Rear Latch Retainer Screws	$1.99
K1084	63-67 Softtop Rear Latch Screw Set	$3.99
31186	63-67 Softtop Rear Pin on Top - LH	$30.99
31187	63-67 Softtop Rear Pin on Top - RH	$30.99
K1389	63-67 Softtop Rear Pin On Top Screw Set	$3.99
X2063	63-67 Softtop Rear Latch - Mounts in Deck Lid - CA	$75.99
1303	63-67 Softtop Rear Latch - Mounts in Deck Lid - TP	$106.99

#28470 1963-67 Deck Lid Latch Assembly

#28465 1963-67 Deck Lid Latch Release Mechanism

#1164 1963-67 Softtop Header Latch - RH

#26653 1963-67 Deck Lid & Door Wedge Set

#28472

#33310

DECK LID

28470	63-67 Deck Lid Latch Assembly	$61.99
28467	63-67 Deck Lid Latch Release Cable - 2 req'd	$9.99
28465	63-67 Deck Lid Latch Release Mechanism	$55.99
28466	63-67 Deck Lid Latch Release Mechanism Screw Set	$3.99
35233	63-67 Deck Lid Latch Release Mechanism Spring	$7.99
K1411	63-67 Deck Lid Latch Screw Set	$4.99
34035	63-67 Deck Lid Release Cable Clamp/Bolt on Lid	$7.99
34034	63-67 Deck Lid Release Cable Clamp/Bolt on Mechanism	$10.99
28469	63-67 Deck Lid Release Cable Grommet	$1.99
28468	63-67 Deck Lid Release Cable Stop	$4.99
53314	63-67 Deck Lid Release Cable - Mech Clamps	$9.99
53315	63-67 Deck Lid Release Cable - Mech Clamp Screws	$0.99
53316	63-67 Deck Lid Release Cable - Mech Clamps - 4 pc	$4.99
53317	63-67 Deck Lid Release Cable - Mech Clamp Bolts - 4 pc	$3.99
28472	63-67 Deck Lid Catch on Body	$21.99
28473	63-67 Deck Lid Catch on Body Anti Skid Shims - 4 pc	$23.99
28474	63-67 Deck Lid Catch on Body Screw Set - 6 pc	$10.99
K1355	63-67 Deck Lid Hinge Screw Set - Top & Bottom	$6.99
33308	63-67 Deck Lid Hinge Shim	$1.09
30001	63-67 Deck Lid Hinge Spring	$9.99
42412	63-67 Deck Lid Hinge Spring Lower Retainers - pr	$31.99
33310	63-67 Deck Lid Side Striker Plates w/ Rivets - pr	$16.99
26653	63-67 Deck Lid Wedge Set - 1 pr plastic wedges, 1 pr diecast wedges, 4 shims & 8 screws	$45.99

WARNING: Cancer and Reproductive Harm — www.P65Warnings.ca.gov

1963-67 SOFTTOP HEADER LATCHES

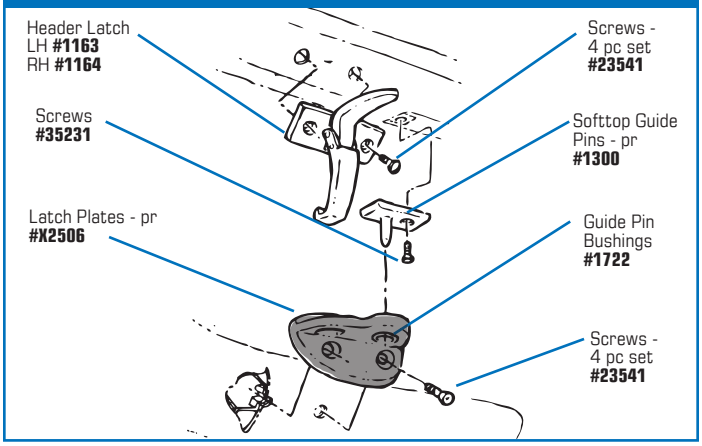

1963-67 SOFTTOP REAR LATCH

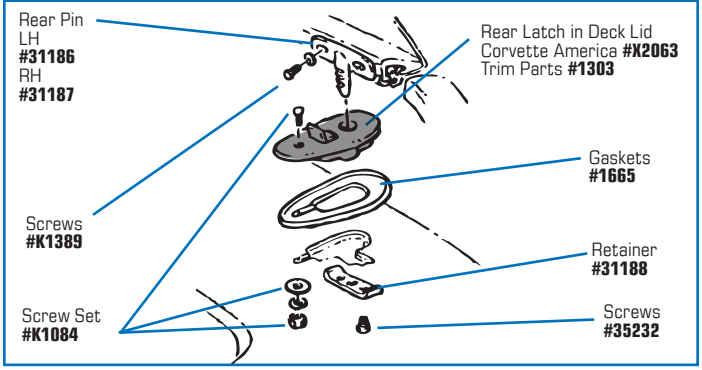

1963-67 DECK LID LATCH

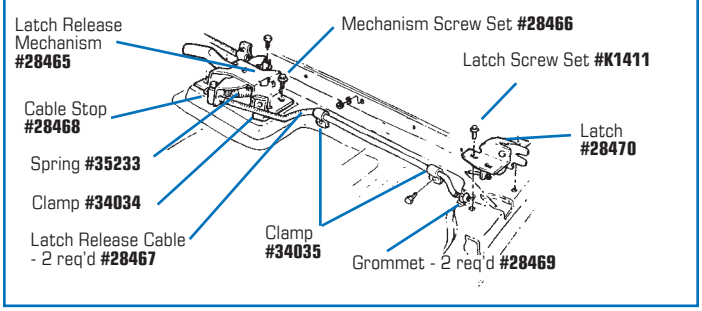

1963-67 DECK LID HINGE

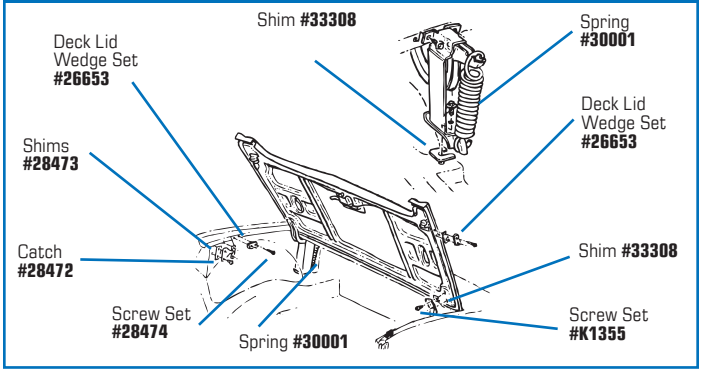

Discounts & Coupons Emailed!

Enter your email address on CorvetteAmerica.com

SPARE TIRE

#28476
1964-67
Spare Tire
Carrier Tub

#23782
1964-67
Spare Tire
Carrier
"V" Strap

#23783
Spare Tire Lock Set

SPARE TIRE COMPONENTS

23784	63-66	Spare Tire Bolt - Front - 9 5/8" each (for all 63, 64-66 w/ Knockoff Wheels - Exc. Goldline Tires)	$29.99
23785	64-66	Spare Tire Bolt - Front - 9 1/4" each - for use w/ Standard Tire only	$39.99
23786	65-67	Spare Tire Bolt - Front -10 1/4" each - for 65-67 w/ Redline or Goldline Tires	$30.99
42414	63-67	Front Spare Tire Bolt Lockwashers - pr	$0.99
28477	63-67	Spare Tire Carrier Tray - Lower	$203.99
28475	63	Spare Tire Carrier Tub	$381.99
28476	64-67	Spare Tire Carrier Tub	$183.99
33312	63-67	Spare Tire Carrier Tub Mount Bolt Set	$3.99
23781	63	Spare Tire Carrier "V" Strap	$68.99
23782	64-67	Spare Tire Carrier "V" Strap	$68.99
36858	63-67	Spare Tire Carrier "V" Strap to Tray Rivets - 6 pc	$0.99
23783	63-67	Spare Tire Lock Set - Round & Hex Head Keys	$91.99
42419	63	Spare Tire Lock Bumper - Prior To 3/63	$3.99
42418	63	Spare Tire Lock Bolt Kit - Standard - 63E	$86.99
23787	63-67	Spare Tire Lock Bolt Kit - Includes: Bolt, Bracket, Nut & Brkt Bolts - for Standard Tires only - 63L	$86.99
42415	63	Spare Tire Lock Bolt Bracket - 63E	$13.99
30011	63-67	Spare Tire Lock Bolt Bracket - 63L	$10.99
33313	63-67	Spare Tire Lock Bolt Bracket Bolts - pr	$3.99
30010	63-67	Spare Tire Lock Bolt Nut	$5.99
42416	63-67	Spare Tire Lock Bolt Pin	$0.99
42417	63-67	Spare Tire Lock Bolt Spacer	$1.99
1176	63-67	Spare Tire Lock Dustcover	$8.99

1963-67 SPARE TIRE

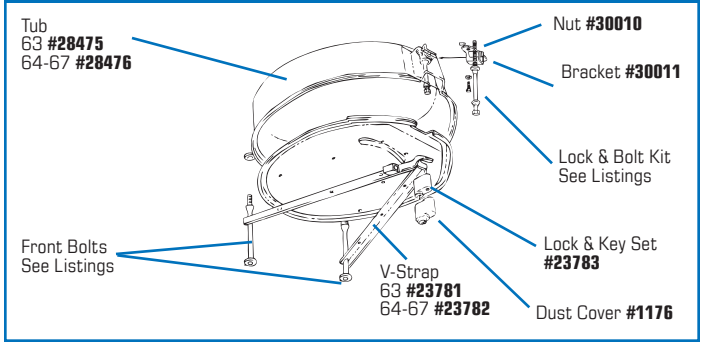

800-458-3475
CorvetteAmerica.com

WARNING: Cancer and Reproductive Harm — www.P65Warnings.ca.gov

#20032

STEERING WHEEL

20032	63-66 Steering Wheel - Simulated Walnut - 63E	$356.99
25879	63-66 Steering Wheel - Walnut - 3 Spoke	$325.99

#40992 1963-67 F Note Low Replacement Horn

#35251 1964-67 Horn Repair Kit - Does 2 Horns

HORN BUTTONS & COMPONENTS

40992	63-67 Horn - F Note - Low - Replacement	$30.99
40994	65-67 Horn - D Note - Replacement	$70.99
52626	63 Horn Assemblies - High/Lo - pr	$183.99
36865	63-67 Horn Button Emblem Retainer	$7.99
26613	65-66 Horn Button Liner - Telescopic	$13.99
28478	63-66 Horn Button Retainer & Contact - w/o Tele	$19.99
33314	67 Horn Button Retainer & Contact - w/o Tele	$30.99
33315	65-66 Horn Button Retainer & Contact - w/ Tele	$30.99
30012	67 Horn Button Retainer & Contact - w/ Tele	$21.99
26614	65-66 Horn Button Retaining Stand - Telescopic	$18.99
20145	65-67 Horn Button Shim w/ Tilt & Tele	$3.99
35703	63-67 Horn Contact Plastic Rivets - 3 pc set	$2.99
K1202	63-67 Horn Contact Screw Set - 67 w/o Tele	$2.99
K1403	67 Horn Contact Screws - w/ Tele 3 pc	$1.99
42421	67 Horn Contact Shim - w/ Tele	$4.99
42445	63-67 Horn Mount Bracket - RH w/ AC	$10.99
35248	63-65 Horn Mount Screw Set	$1.99
35249	66-67 Horn Mount Screw Set	$1.99
42441	63-65 Horn Relay - Replacement	$35.99
42434	66-67 Horn Relay - Reproduction	$86.99
42443	63-65 Horn Relay Plug	$1.99
35250	63 Horn Repair Kit - does 2 original horns	$36.99
35251	64-67 Horn Repair Kit - does 2 original horns	$56.99
41011	64-65 Horn w/ Welded Brackets	$162.99
35245	63-65 Horn Wire S-Clips - 5 pc	$5.99
35246	66-67 Horn Wire S-Clips - pr	$2.99

#1760 1963-64 Horn Button Assembly

#1757 1965-66 Horn Button Assembly - Standard

#1606 1965-66 Horn Button Assembly - Telescopic

#1758 1967 Horn Button Assembly

HORN BUTTON ASSEMBLIES

1760	63-64 Horn Button Assembly	$69.99
1757	65-66 Horn Button Assembly - Standard	$69.99
1606	65-66 Horn Button Assembly - Telescopic	$73.99
1758	67 Horn Button Assembly	$54.99

The Finest Restoration Parts

Corvette America proudly offers Trim Parts products!

#1778 1967 Turn Signal Lever

#1765 1964-65 Turn Signal Lever

#0830 1963 Turn Signal Lever

TURN SIGNAL LEVERS

0830	63 Turn Signal Lever	$19.99
1765	64-66 Turn Signal Lever	$21.99
1778	67 Turn Signal Lever	$21.99
35234	64-66 Turn Signal Lever Screw	$1.09
42425	67 Turn Signal Lever Screw	$1.99
42446	67 Turn Signal Lever Shield - Plastic	$3.99

WARNING: Cancer and Reproductive Harm — www.P65Warnings.ca.gov

#2120 1964-66 Turn Signal Switch - w/o Tele

#44981 1965-66 Turn Signal Switch w/ Telescopic

Turn Signal Cancel Cams & Switches

1655	63	Turn Signal Cancel Cam	$15.99
1614	64-66	Turn Signal Cancel Cam - w/o Telescopic	$15.99
1672	67	Turn Signal Cancel Cam - w/o Telescopic	$33.99
26654	67	Turn Signal Cancel Cam - w/ Telescopic	$33.99
35235	63-67	Turn Signal Cancel Cam Screws & Lockwashers Set	$1.99
33318	63	Turn Signal Cancel Ring Pivot Screw	$8.99
32855	63	Turn Signal Housing Lock Wedge & Screw	$7.99
33319	63	Turn Signal Roller	$5.99
33320	63	Turn Signal Roller "W" Spring	$15.99
0238	63	Turn Signal Switch	$45.99
2120	64-66	Turn Signal Switch - w/o Telescopic	$66.99
44981	65-66	Turn Signal Switch - w/ Telescopic	$126.99
2121	67	Turn Signal Switch	$101.99
33321	63	Turn Signal Switch Cable	$54.99
35247	63	Turn Signal Switch Cable Mount Screw	$0.99
37319	67	Turn Signal Switch Cover	$6.99
35243	63	Turn Signal Switch Mount Screws - pr	$0.99
42428	64-66	Turn Signal Switch Repair Plate - w/o Telescopic	$12.99
33324	64-66	Turn Signal Wire Protector	$19.99

#1571 1965-66 Chrome Lock Ring

#1590 1967 Chome Lock Ring w/ Tele

Telescopic Steering Column

33434	65-66	Bearing - Steering Column - Lower	$24.99
33435	65-66	Bearing - Steering Column - Upper	$24.99
33334	65-66	Horn Button Retainer Donut	$21.99
K1211	65-66	Horn Button Retainer Screws - w/ Tele - pr	$1.99
30012	67	Horn Contact - w/ Tele	$21.99
30016	67	Horn Contact Spring & Brush Kit	$6.99
33337	65-66	Horn Contact Spring - w/ Tele	$5.99
1571	65-66	Lock Ring - Chrome	$63.99
1590	67	Lock Ring - Chrome - w/ Tele	$65.99
36862	67	Lock Ring Spacer w/ Tele	$21.99
33332	65-67	Lock Ring Star Bolt - w/ Tele	$19.99
K1287	65-67	Lock Ring Star Bolt Retaining Screws - pr	$1.99
33343	65-66	Lower Bearing Felt - w/ Tele	$1.99
31198	63-66	Lower Bearing Housing	$10.99
33344	65-66	Lower Bearing Washer - w/ Tele	$9.99
33346	65-66	Spring - Lower Steering Column - w/ Tele	$10.99
33339	65-67	Spring - Upper Steering Column - w/ Tele	$5.99
33341	65-66	Steering Column Bearing Plate - w/ Tele	$14.99
33345	65-66	Steering Column Bearing Clip - Up & Lwr - w/ Tele	$1.99
34918	64-67	Steering Column Collar Insulator & Retainer	$15.99
K1262	63-67	Steering Column Collar Screws - pr	$1.99
2229	67	Steering Column Cover - Upper 2 pc	$105.99
K1433	65-66	Steering Col. Mount Brkt Screws & Nuts - w/ Tele	$3.99
35238	65-66	Steering Column Tube & Cap w/ Tele	$107.99
35240	65-66	Steering Column Stop Bolt - Brass - w/ Tele	$5.99
42422	63-66	Steering Wheel Hub - w/o Tele	$121.99
42423	65-66	Steering Wheel Hub - w/ Tele	$142.99
42424	67	Steering Wheel Hub - All - Correct	$142.99
36861	67	Steering Wheel Hub w/ Tele - Replacement	$60.99
K1083	63-67	Steering Wheel Mounting Screws - 6 pc	$4.99
33327	65-67	Steering Wheel Retaining Nut & Washer	$2.99
33338	65-66	Stop Pin - w/ Tele	$9.99
37320	65-66	Stop Pin Bumper - w/ Tele	$0.99
33336	65-66	Stop Rod - w/ Tele	$5.99
37321	67	Stop Rod - w/ Tele	$5.99
28480	67	Traffic Hazard Button - Long - Chrome w/ Wording on side - 67L	$38.99
28479	67	Traffic Hazard Button - Short - Chrome w/ Wording on Top - 67E	$26.99
33340	65-66	Turn Signal Cancel Cam - w/ Tele	$37.99
33326	67	Upper Bearing - w/ Tele	$30.99
42427	67	Upper Bearing Clip & Washer Set	$9.99

#42423 1965-66 Steering Wheel Hub w/ Tele

#36861 1967 Steering Wheel Hub w/ Tele - Replacement

1965-66 TELESCOPIC STEERING COLUMN

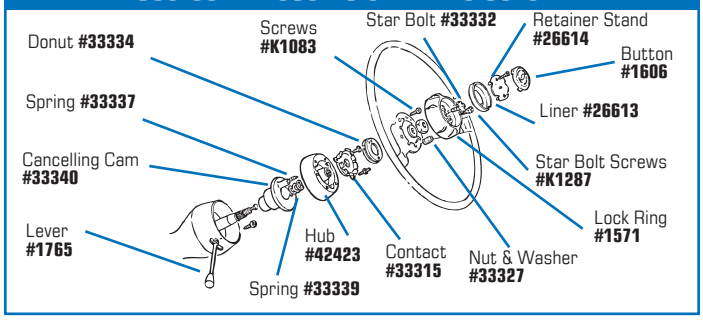

1967 TELESCOPIC STEERING COLUMN

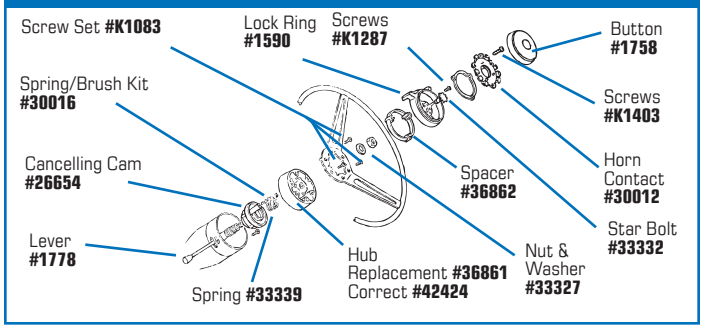

800-458-3475
CorvetteAmerica.com

WARNING: Cancer and Reproductive Harm — www.P65Warnings.ca.gov

Standard Steering Column

37322	63	Bearing - Steering Column - Upper	$35.99
1306	64-66	Bearing - Steering Column - Upper - w/o Tele	$41.99
33433	67	Bearing - Steering Column - Upper	$24.99
33436	67	Bearing - Steering Column - Lower - 67L	$55.99
33431	64-66	Clip for Direction Plug to Column	$16.99
52387	63-66	Harness Adapter Plug	$50.99
33322	63-66	Horn Contact Brush Connector w/o Tele	$13.99
K1202	63-67	Horn Contact Screw Set	$2.99
30016	67	Horn Contact Spring & Brush Kit	$6.99
31190	63-66	Lower Steering Column Bearing - w/o Tele	$29.99
31201	67	Lower Steering Column Bearing - 1st Design	$110.99
31207	63-66	Lower Steering Column Bearing Clamp	$13.99
35242	67	Lower Steering Column Bearing Clamp	$10.99
31198	63-66	Lower Steering Column Bearing Housing	$10.99
31199	63-66	Lower Steering Column Bearing Spring	$6.99
42430	67	Lower Steering Column Bearing Spring - 67E	$5.99
31203	67	Lower Steering Column Bearing Spring - 67L	$5.99
31204	63-66	Lower Steering Column Bearing Washer	$3.99
35237	67	Lower Steering Column Bearing Washer	$4.99
42447	67	Lower Steering Column Spacer - Plastic 67E	$21.99
34917	63	Steering Column Collar Insulator & Retainer	$15.99
34918	64-67	Steering Column Collar Insulator & Retainer	$15.99
K1262	63-67	Steering Column Collar Screws - pr	$1.99
30028	67	Steering Column Coupler - All	$50.99
42439	63-67	Steering Column Coupler Flange Screw	$2.99
28493	63-66	Steering Column Coupler Repair Kit	$12.99
33330	63-67	Steering Column Coupler Star Bolt	$4.99
28490	63-67	Steering Column Firewall Seal	$3.99
35241	67	Steering Column Jacket Screws - pr	$1.99
42431	67	Steering Column Lower Shaft Retainer - 67E	$3.99
42432	67	Steering Column Lwr Shaft Retainer Washer 67E	$5.99
28484	63	Steering Column Mount Bracket - Underdash	$33.99
28485	64-67	Steering Column Mount Bracket - Underdash	$33.99
31208	65-66	Steering Col. Mount Brkt - Underdash - w/ Tele	$28.99
K1393	63-66	Steering Column Mount Bracket Screw & Nut Set	$2.99
K1394	67	Steering Column Mount Bracket Screw & Nut Set	$3.99
35254	67	Steering Column Mount Bolt & Washer Set	$4.99
42438	67	Steering Column Pin Bumpers - pr	$17.99
42433	63-66	Steering Column Shaft - w/o Tele	$93.99
28489	63-66	Steering Column Support at Firewall	$28.99
28492	67	Steering Column Support at Firewall w/ Clamp	$39.99
28491	63-66	Steering Column Support Clamp	$13.99
35244	63-67	Steering Column Support Screws - pr	$1.99
28486	63	Steering Column & Trip Odo Cable Support	$33.99
28487	64-67	Steering Column & Trip Odo Cable Support	$33.99
28482	63	Steering Column Tube	$84.99
28483	64-66	Steering Column Tube w/o Tele	$84.99
28488	63-66	Steering Column "U" Bolt w/ Nuts	$21.99
42444	63	Steering Jacket Wedge & Screw	$7.99
K1083	63-67	Steering Wheel Mounting Screws - 6 pc set	$4.99
32856	63-66	Steering Wheel Retain. Nut & Washer w/o Tele	$2.99
29886	63-64	Trip Odometer Reset Cable w/ Knob & Nut - 64E	$48.99
39905	64-67	Trip Odometer Reset Cable w/ Knob & Nut - 64L	$48.99
K1370	64-66	Turn Signal Switch Mounting Screw Set	$2.99
42427	67	Upper Bearing Clip & Washer Set	$9.99
33325	64-66	Upper Steering Column Mast Jacket Retainer	$19.99

New products always added!
Corvette America.com

NEW

#52368 1963-66 Steering Column Tilt Black Power Coat

Tilt Steering Column Components

Replaces the Standard Steering Column.

52645	63-67	Steering Shaft Kit - Ididit Column 1" - DD Column Output Shaft	$199.99
52366	63-66	Tilt Steering Column - Steel	$483.99
52367	63-66	Tilt Steering Column - Chrome	$636.99
52368	63-66	Tilt Steering Column - Black Powder Coat	$635.99
52374	63	Tilt Steering Col. Install. Kit - Original Harness	$190.99
52375	64-66	Tilt Steering Col. Install. Kit - Original Harness	$188.99
52376	63	Tilt Steering Col. Install. Kit - Aftmrkt Harness	$152.99
52379	63	Tilt Steering Column Flasher Kit - Ididit - 4 Way	$45.99
52380	64-66	Tilt Steering Column Flasher Kit - Ididit - 4 Way	$47.99
52385	63-66	Steering Wheel Adaptor - Ididit - 6 Bolt Black Powder Coat	$144.99
52386	63-66	Tilt Steering Column - Ididit - 6 Bolt - Black Powder Coat	$135.99

Discounts & Coupons Emailed!

Enter your email address on CorvetteAmerica.com

1963-67 STANDARD STEERING COLUMN

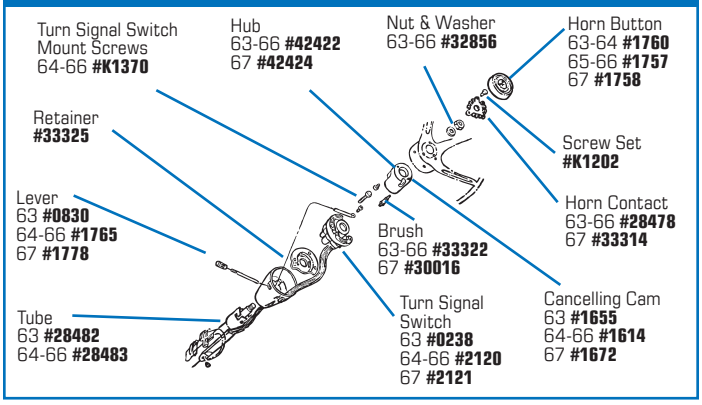

1963-67 STEERING COLUMN

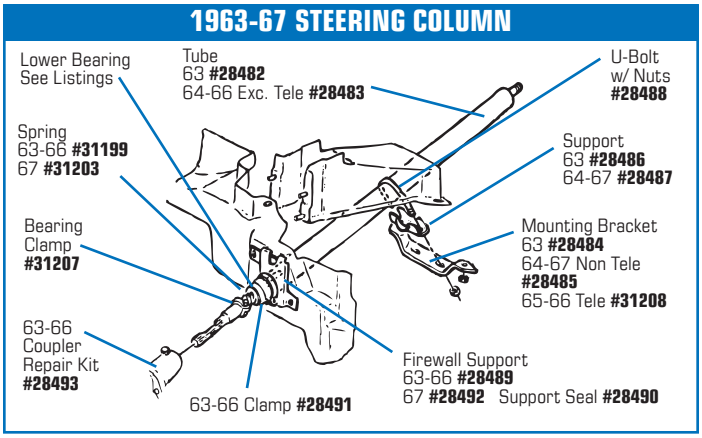

WARNING: Cancer and Reproductive Harm — www.P65Warnings.ca.gov

#36873 Steering Relay Rod Rebuild Kit w/o Power Steering

Steering Relay Rod

33354 63-67 Steering Relay Ball Stud Seat $29.99
33351 63-67 Steering Relay Rod Ball Stud $30.99
33352 63-67 Steering Relay Rod Ball Stud Seal $21.99
33353 63-67 Steering Relay Rod Ball Stud Seal Clamp $14.99
K1273 63-67 Steering Relay Rod Seal Clamp Bolts & Nuts Set... $1.99
33355 63-67 Steering Relay Rod Ball Stud Seat Springs - pr.... $10.99
33356 63-67 Steering Relay Rod Cap..... $8.99
36874 63-67 Steering Relay Rod Cap Cotter Pin..... $0.99
36875 63-67 Steering Relay Rod Grease Fitting..... $1.99
36873 63-67 Steering Relay Rod Rebuild Kit w/o Power Steering - Includes: Ball Stud, Seal, Clamp, Springs, Cap, Cotter Pin & Grease Fitting $111.99

1963-67 STANDARD STEERING LINKAGE

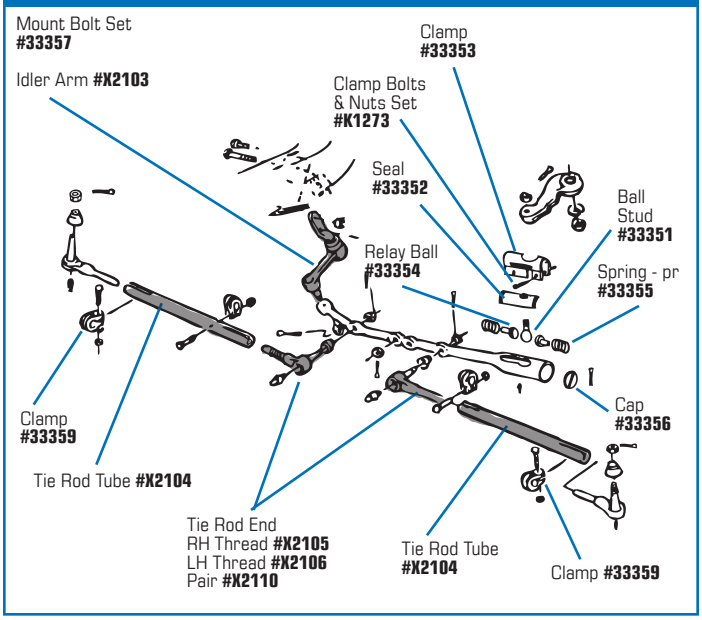

Corvette America will match any competitor's price!
Call 800-458-3475 for details.

#X2103 Idler Arm

#51770 Tie Rod End - LH

Idler Arms

Idler arm has zerk fittings on both ends for proper servicing & lubrication. Complete with castle nut & cotter pin.

X2103 63-67 Idler Arm $40.99
51787 63-67 Idler Arm - Premium Grade $65.99
35259 63-67 Idler Arm Boot $9.99
33357 63-67 Idler Arm Mounting Bolt / Nut Set..... $4.99
36886 63-67 Idler Arm Nut..... $1.99
35258 63-67 Idler Arm Plastic & Rubber Bushings - pr..... $4.99

Tie Rod Ends

51770 63-67 Tie Rod End - LH Thread - Premium. $30.99
X2105 63-67 Tie Rod End - LH Thread..... $17.99
51771 63-67 Tie Rod End - RH Thread - Premium. $30.99
X2106 63-67 Tie Rod End - RH Thread $17.99
X2110 63-67 Tie Rod Ends - pr..... $30.99
51772 63-67 Tie Rod Tube w/ Clamps - Premium $40.99
X2104 63-67 Tie Rod Tube w/ Clamps $17.99
33359 63-67 Tie Rod Tube Clamp $5.99
28906 63-67 Tie Rod Tube Clamp Bolt / Nut Kit - 4 pc..... $7.99
49631 63-67 Tie Rod End Boot..... $7.99

#30928 Steering Damper Shock Kit

Steering Damper

30919 63-67 Steering Damper Bracket on Frame $30.99
30921 63-67 Steering Damper Bracket on Relay Rod $33.99
30920 63-67 Steering Damper Bracket on Frame Kit $10.99
30922 63-67 Steering Damper Bracket on Rod Bolt & Nut Set... $4.99
30928 63-67 Steering Damper Shock Kit.....$154.99

1963-67 MANUAL STEERING DAMPER

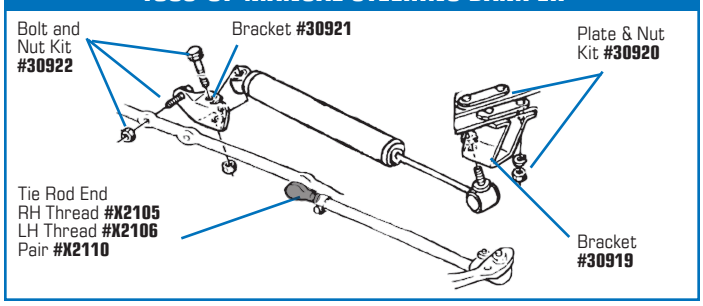

800-458-3475
CorvetteAmerica.com
WARNING: Cancer and Reproductive Harm — www.P65Warnings.ca.gov

#30899 Pitman Arm w/ PS

#33349 PS Control Valve Ball Stud/Seal Kit

#36879 Power Steering Pump Reservoir

#X2154 1963-67 Power Steering Hose Kit - 327

Power Steering

30899	63-67 Pitman Arm - w/ PS	$61.99
34055	63-67 Pitman Arm to Steering Box Nut & Washer	$6.99
33366	63-67 PS Control Valve - Complete Rebuild Kit	$76.99
33349	63-67 PS Control Valve Ball Stud & Seal Kit	$52.99
33347	63-67 PS Control Valve Boot	$9.99
36876	63-67 PS Control Valve Boot Clamp	$8.99
35255	63-67 PS Control Valve Boot Clamp Bolt & Washer	$1.99
33348	63-67 PS Control Valve Dust Cap	$12.99
33391	63-67 PS Control Valve X Cap	$23.99
35257	63-67 PS Cylinder Boot	$5.99
35256	63-67 PS Cylinder Castle Nut & Lockwasher	$0.99
30910	63-67 PS Cylinder Frame Bracket	$44.99
43087	63-67 PS Cylinder Frame Bracket Reinforce. - 2 req'd	$6.99
27358	63-67 PS Cylinder Mounting Grommet	$2.99
30914	63-67 PS Cylinder Mounting Grommet Sleeve	$2.99
30915	63-67 PS Cylinder Mounting Grommet Washer	$9.99
1668	63-67 PS Cylinder Rebuild Kit w/ Ball Stud	$37.99
35260	63-67 PS Cylinder Piston Nut & Cotter Pin	$9.99
42985	63-67 PS Fluid	$11.99
2258	63-67 PS Hose - Cylinder Extend	$20.99
2259	63-67 PS Hose - Cylinder Retract	$20.99
2260	63-67 PS Hose - Pressure - 327	$20.99
2261	65-67 PS Hose - Pressure - 396 / 427	$20.99
2262	63-67 PS Hose - Return Line	$20.99
33350	63-67 PS Hose "C" Clip	$5.99
36879	63-67 Power Steering Pump Reservoir	$79.99
52641	63-67 PS Pump - New w/ Reservoir	$285.99
52642	63-67 PS Pump - New w/o Reservoir	$213.99
32374	65-67 PS Pump Belt Guard - w/ AC	$19.99
36882	65-67 PS Pump Belt Guard Bolts - 2 pc set	$1.99
36885	65-67 PS Pump Bolt Kit - 396 / 427	$2.99
30908	65-67 PS Pump Mount Bracket - 396 / 427 / 454	$53.99
30852	65-67 PS Pump / Alternator Mount Bracket	$67.99
33659	65-67 PS Pump / Alternator Mount Bracket Bolt Kit	$19.99
30908	65-67 PS Pump Mount Bracket	$53.99
K1289	63-65 PS Pump Mount Bracket Bolt Kit - Before 11/65	$3.99
K1331	65-67 PS Pump Mount Bracket Bolt Kit - After 11/65	$5.99
30906	63-67 PS Pump Mount Bracket Set	$52.99
31027	65-67 PS Pump Mount Bracket Stud	$3.99
36883	63-67 PS Pump Pulley - 250-300 hp All & 350hp w/AC	$60.99
30903	65-67 PS Pump Pulley - Single	$104.99
30904	65-67 PS Pump Pulley - Dual	$117.99
36884	63-67 PS Pump Pulley Nut	$3.99
39737	63-67 PS Pump Pulley Woodruff Key	$2.99
36899	63-67 PS Pump Stud - 8 pc set	$15.99
42765	63-67 PS Relay Rod	$141.99
42769	63-67 PS Relay Rod - Small Diameter	$144.99
30913	63-67 PS Return Hose Line Clamp	$3.99

Power Steering Hose Kits

X2154	63-67 PS Hose Kit - 327 - 4 pc set	$66.99
20764	65-67 PS Hose Kit - 396 / 427 - 4 pc set	$61.99

1963-67 POWER STEERING

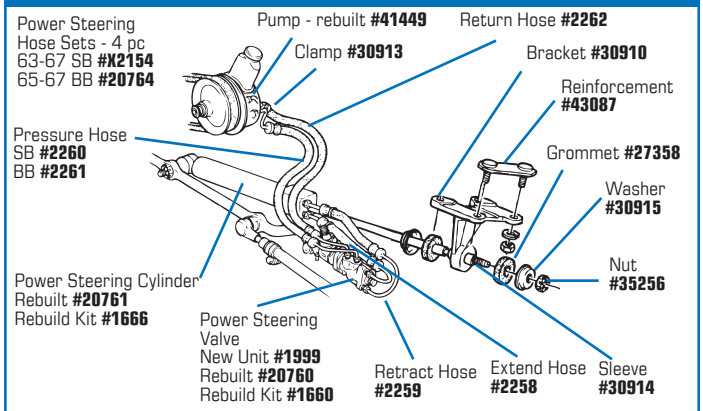

Power Steering Rebuild Kits include: Fluid Hoses, Valve & Cylinder
SB **#42987 or 43200** — BB **#42986 or 43201**

1963-67 327 POWER STEERING PUMP

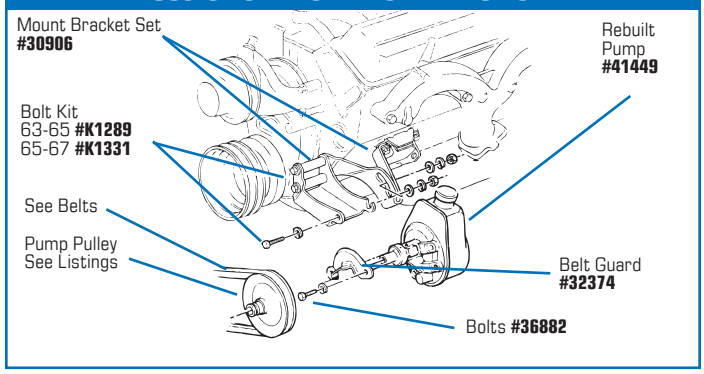

1965-67 BIG BLOCK POWER STEERING PUMP

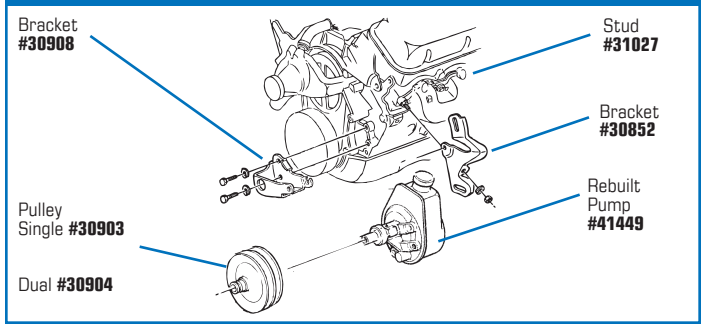

WARNING: Cancer and Reproductive Harm — www.P65Warnings.ca.gov

Power Steering Rebuild Kits

Power Steering Rebuild Kits include a valve, cylinder, hose set and fluid. Kits that include rebuilt valves and cylinders require refundable core charges at time of purchase.

42986 65-67 PS Rebuild Kit - BB - New Valve & Cylinder..... **$397.99**
42987 63-67 PS Rebuild Kit - SB - New Valve & Cylinder..... **$387.99**
43200 63-67 PS Rebuild Kit - Small Block - Rebuilt Valve & Cylinder - Core Charges Req'd **$499.99**
43201 65-67 PS Rebuild Kit - Big Block - Rebuilt Valve & Cylinder - Core Charges Req'd **$499.99**

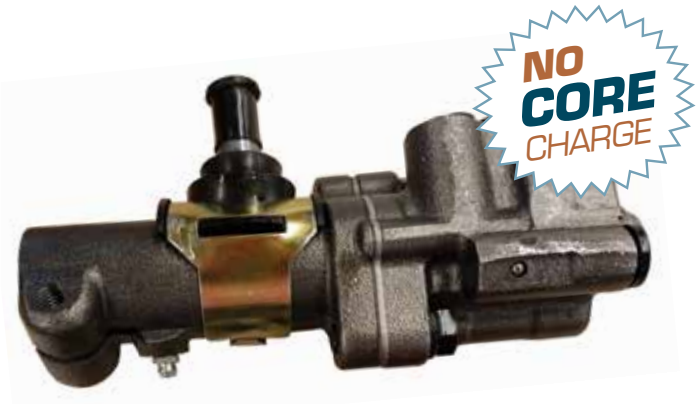

#1999 NEW PS Control Valve

Power Steering Control Valves & Cylinders

New units provide the utmost convenience at a great price. Our New units are similar in price to Rebuilt units found elsewhere! Each rebuilt Control Valve & Cylinder requires the exchange of a core in reconditionable, non-damaged condition. If no core is available at time of purchase, a refundable core charge is required.

1999 63-67 Power Steering Control Valve - **New** - No Core...**$226.99**
20760 63-67 Power Steering Control Valve - Rebuilt **$139.99**
29990 63-67 Power Steering Control Valve Core Charge.....**$150.00**
X2171 63-67 Power Steering Cylinder - **New** - No Core **$142.99**
20761 63-67 Power Steering Cylinder - Rebuilt.....**$135.99**
29989 63-67 Power Steering Cylinder Core Charge..... **$50.99**

Note: Core Charge will be refunded upon return of an Original Valve / Cylinder in Rebuildable Condition.

#1660 Control Valve Kit

Power Steering Valve & Cylinder Rebuild Kits

1660 63-67 Control Valve Kit **$28.99**
1666 63-67 Cylinder Kit **$20.99**

Note: Installation of Control Valve and Cylinder Rebuild Kits requires removal of the component from your vehicle and breeching the power steering fluid system. If you are not comfortable with these procedures, we recommend a qualified professional perform the rebuild.

KITS INCLUDE

- Pump (rebuilt)
- Bolts
- Hoses
- Supports
- Control Valve
- Slave Cylinder
- Pitman Arm
- Brackets
- Relay Rod
- Braces
- All Hardware
- Instructions

Power Steering Conversion Kits

Kits contain everything you need to convert to power steering. All parts covered by 90-day manufacturer's warranty. Belts must be purchased separately.

2010 63-67 Small Block **$886.99**
2013 63-67 Small Block - HP.....**$1019.99**
42763 66-67 Big Block.....**$1172.99**

#X2171 New Power Steering Cylinder

#20761 Rebuilt Power Steering Cylinder

800-458-3475
CorvetteAmerica.com
WARNING: Cancer and Reproductive Harm — www.P65Warnings.ca.gov

#40989 New Steering Box

#36870 Rebuilt Steering Box

Rack & Pinion Conversion Kits

Improve steering feel, stability and control with our complete steering conversion kits. Steering racks offer quicker ratios and are lighter than the stock steering. Install with basic hand tools in approximately three hours. Utilizes stock pump, not included as part of kit. **Kit includes:**

- Rack and pinion
- Adapter brackets
- U-joint assembly
- Tie rod ends
- Power steering hoses
- Grade-8 Fasteners

43569 63-66 Rack & Pinion Conversion Kit - SB **$1649.99**
43570 65-66 Rack & Pinion Conversion Kit - BB **$1649.99**
43572 67 Rack & Pinion Conversion Kit - SB **$1649.99**
43571 67 Rack & Pinion Conversion Kit - BB **$1649.99**

#41449

#51056

Power Steering Pump - Rebuilt

Features correct reservoir, fittings, new O-rings, seals, shaft bushing and epoxy black paint. Factory-tested. No Core Deposit required.

41449 63-67 PS Pump - Rebuilt w/ Correct Reservoir **$142.99**
51055 63-67 PS Pump - w/ Reservoir - Remanufactured **$142.99**
51056 63-67 PS Pump - w/o Reservoir - Remanufactured..... **$97.99**
30901 63-67 Power Steering Pump Cap..... **$5.99**
30900 63-67 Power Steering Pump Seal Kit **$14.99**

Steering Boxes

Rebuilt unit uses NEW internal components!

36870 63-67 Steering Box - Rebuilt - Core Charge Required... **$228.99**
40989 63-67 Steering Box - New - 16:1 Ratio..... **$422.99**
33360 63-67 Steering Box Cover Gasket **$7.99**
42452 63-67 Steering Box End Plug..... **$2.99**
33361 63-67 Steering Box to Frame Mounting Bolt & Nut Set.. **$12.99**
33362 63-67 Steering Box Lubricant..... **$19.99**
42449 63-67 Steering Box Pitman Shaft Seal **$9.99**
30916 63-67 Steering Box Rebuild Kit **$81.99**
43398 63-67 Steering Box Repair Kit - 16:1 ..... **$289.99**
42451 63-67 Steering Box Worm Shaft Race - pr **$21.99**
42450 63-67 Steering Box Worm Shaft Seal **$10.99**

BORGESON
Steering You Forward

Performance Steering Boxes

Does not require you to change your oil pan & eliminates the control valve, power steering cylinder & hoses. Available with 12.7:1 performance ratio or 14:1 sport ratio. Direct replacement for worn power assist or manual steering gears. **Quicker, more responsive steering. Excellent road feedback and stability. 100% new - not rebuilt.** Latest in steering technology and performance. New Pitman Arm included! **Notes**: 1963-67 Corvette kits come complete with gear, column template, rag joint type steering coupler, stock type power steering hose kit and pitman arm. Use manual steering linkage.

48560 63-66 Steering Box - 12.7:1 Performance ratio **$759.99**
48562 67 Steering Box - 12.7:1 Performance ratio **$759.99**
48563 63-66 Steering Box Conversion Kit **$959.99**
48565 67 Steering Box Conversion Kit **$959.99**

WARNING: Cancer and Reproductive Harm — www.P65Warnings.ca.gov

FRONT SUSPENSION

35268 63-65 A-Arm Alignment Nuts & Lockwashers Set $3.99
35269 66-67 A-Arm Alignment Nuts - 4 pc $1.99
X2168 63-67 A-Arm Bushing Set - 8 pc - Upper / Lower $40.99
X2588 63-67 A-Arm Bushings - Polyurethane - 8 pc $75.99
1167 63-66 A-Arm Flaps - pr $13.99
0998 67 A-Arm Flaps - pr $13.99
0654 63-67 A-Arm Flap Staple Set - SS - 25 pc $3.99
33363 63-67 A-Arm Hardware Kit - 42 pc - Includes: Bolts, Nuts, Lock Washers & Cupped Washers for all A-Arms $54.99
30934 63-67 A-Arm Shim Kit - both sides $24.99
33367 65-67 Backing Shield - Silver LH $30.99
33368 65-67 Backing Shield - Silver RH $30.99
49584 65-67 Backing Shield - Silver w/ Delco Stamp - LH $40.99
49585 65-67 Backing Shield - Silver w/ Delco Stamp - RH $40.99
33369 63-67 Backing Shield Gaskets - pr $5.99
30938 63-67 Bearing Cap w/ Dimple - Correct $11.99
51101 63-67 Bearing Cap - Front Wheel - Chrome $8.99
2017 65-67 Brake Rotor - Front - Reproduction $61.99
35271 63-67 Brake Rotor to Hub Rivets - 10 pc $8.99
35262 63-67 Camber Adjusting Bolts - 4 pc $13.99
37506 64-67 Front Link Bolt w/ WB Head Markings $4.99
1398 63-67 Front Shock Absorber $47.99
1399 63-67 Front Shock Absorber - HD - Suspension $44.99
33364 63-67 Front Suspension Bumper Set - Upper & Lower $20.99
K1468 63-67 Front Suspension Lower Bumper Bolt Kit - "WB" $8.99
50657 63-67 Front Wheel Outer Bearing & Race $9.99
50658 63-67 Front Wheel Inner Bearing & Race $20.99
50659 63-67 Front Wheel Inner Bearing Seal $6.99
K1454 63-64 Grease Fitting Kit - 64 E - 8 pc $8.99
K1451 64-67 Grease Fitting Kit - 64 L - 8 pc $8.99
36841 63-67 Lower A-Arm w/ Ball Joint - LH Reconditioned $353.99
36842 63-67 Lower A-Arm w/ Ball Joint - RH Reconditioned $353.99
36891 63-67 Lower A-Arm w/ Ball Joint - LH $360.99
42487 63-67 Lower A-Arm Bumper $5.99
30931 63-67 Lower A-Arm Bushing $4.99
35263 63-67 Lower A-Arm Bushing Retainers, Bolts & Lockwashers - 12 pc set $19.99
48464 63-67 Lower A-Arm Shafts - 2 req'd $81.99
35267 63-67 Lower A-Arm Shaft Bolt, Washer & Nut - 6 pc $19.99
34061 63-67 Lower A-Arm Shaft to Frame Nut Plate $14.99
K1350 63-67 Lower A-Arm Shaft to Frame Bolt Kit - 4 pc $11.99
51774 63-67 Lower Ball Joint - Premium Grade $45.99
X2170 63-67 Lower Ball Joint $24.99
30933 63-67 Lower Ball Joint Rivet Set $2.99
34429 63-67 Lower Control Arm Bracket - Lower $49.99
34430 63-67 Lower Control Arm Bracket - Rear $64.99
25425 65-67 Rebuild Service - Front Wheel Bearing $264.99
25426 63-67 Rebuild Service - Upper A-Arm Service $177.99
25427 63-67 Rebuild Service - Lower A-Arm Service $183.99
42491 63-64 Shock Mount Grommets - Lower - pr $4.99
35266 63-64 Spindle / Steering Knuckle Bolt Kit $5.99
34063 65-67 Spindle / Steering Knuckle Bolt / Nut Kit - 8 pc $6.99
33370 63-67 Spindle Nuts & Cotter Pins - pr $8.99
33371 63-67 Spindle Washer $17.99
33372 63-67 Static Collector In Bearing Cap $20.99
36877 63-67 Steering Knuckle Hole Plugs - w/ PS - pr $13.99
36843 63-67 Upper A-Arm w/ Ball Joint - LH Reconditioned $265.99
36844 63-67 Upper A-Arm w/ Ball Joint - RH Reconditioned $265.99
36888 63-67 Upper A-Arm w/ Ball Joint - LH $283.99
36889 63-67 Upper A-Arm w/ Ball Joint - RH $283.99
30923 63-67 Upper A-Arm Less Ball Joint - LH $167.99
30924 63-67 Upper A-Arm Less Ball Joint - RH $164.99
42486 63-67 Upper A-Arm Bumper $5.99
30926 63-67 Upper A-Arm Bushing $5.99
35270 63-67 Upper A-Arm Bushing Retainers, Bolts & Lockwashers - 12 pc $21.99
30925 63-67 Upper A-Arm Shaft Kit $50.99
36890 63-67 Upper A-Arm Shaft Bolt & Nut Kit - 8 pc $16.99
51773 63-67 Upper Ball Joint - Premium Grade $60.99
X2169 63-67 Upper Ball Joint $24.99
35261 63-67 Upper Ball Joint Nut & Cotter Pin Set $2.99
49630 63-67 Upper Ball Joint Boot $7.99
30927 63-67 Upper Ball Joint Rivet Set $4.99
30929 63-67 Upper Ball Joint Rivet Set - 5/16" $4.99
34068 65-67 Upper Bolt - Front Dust Shield $16.99
2424 63-67 Wheel Bearing Kit - Front - 5 pc $27.99
36906 63-67 Wheel Lug Stud $2.99

TOTAL POLYURETHANE BUSHING KIT

Improves Ride and Handling. Outlasts Stock Rubber Bushings
Durable & reliable, Prothane bushings are tested and proven to endure the most demanding conditions. Our kit is convenient and more affordable than purchasing individual pieces.
Includes: Front & Rear Control Arm Bushings, Rear Sway Bar End Link Bushings, Power Steering Cylinder Bushing, Spring Mount Cushions, Strut Rod Bushings, Transmission Mount, Sway Bar End Link Bushings, Pinion Mount Bushing, Tie Rod & Ball Joint Boots.

34821 63-67 Total Poly Bushing Kit $254.99

#33740 1963-67 Body Mount Cushion Set

#34819 1963-67 Transmission Mount

INDIVIDUAL POLYURETHANE BUSHINGS

X2588 63-67 A-Arm Bushings - Upper & Lower - 8 pc $75.99
34820 63-67 Ball Joint Dust Boot Set $11.99
33740 63-67 Body Mount Cushions $73.99
34814 63-67 Rear End Pinion Mount Poly Grommet Set $12.99
34813 63-67 Power Steering Cylinder Bushing Kit $11.99
30987 63-67 Rear Control Arm Bushing Set $27.99
33373 63-67 Rear Spring Cushions - 4 pc $19.99
33374 63-67 Strut Rod Bushings $50.99
1773 63-67 Sway Bar Links w/ Urethane Bushings pr $18.99
34818 63-67 Tie Rod End Dust Boots - pr $6.99
34819 63-67 Transmission Mount $36.99

800-458-3475
CorvetteAmerica.com
WARNING: Cancer and Reproductive Harm — www.P65Warnings.ca.gov

#49585 1965-67 Silver Backing Shield w/ Delco Stamp

#30923 1963-67 Upper A-Arm Less Ball Joint - LH

#X2170 1963-67 Lower Ball Joint

#X2169 1963-67 Upper Ball Joint

#X2588 1963-67 Polyurethane A-Arm Bushings - 8 pc. set

#2424 1963-67 Front Wheel Bearing Kit

#33372 1963-67 Static Collector in Bearing Cap

1963-67 FRONT SUSPENSION

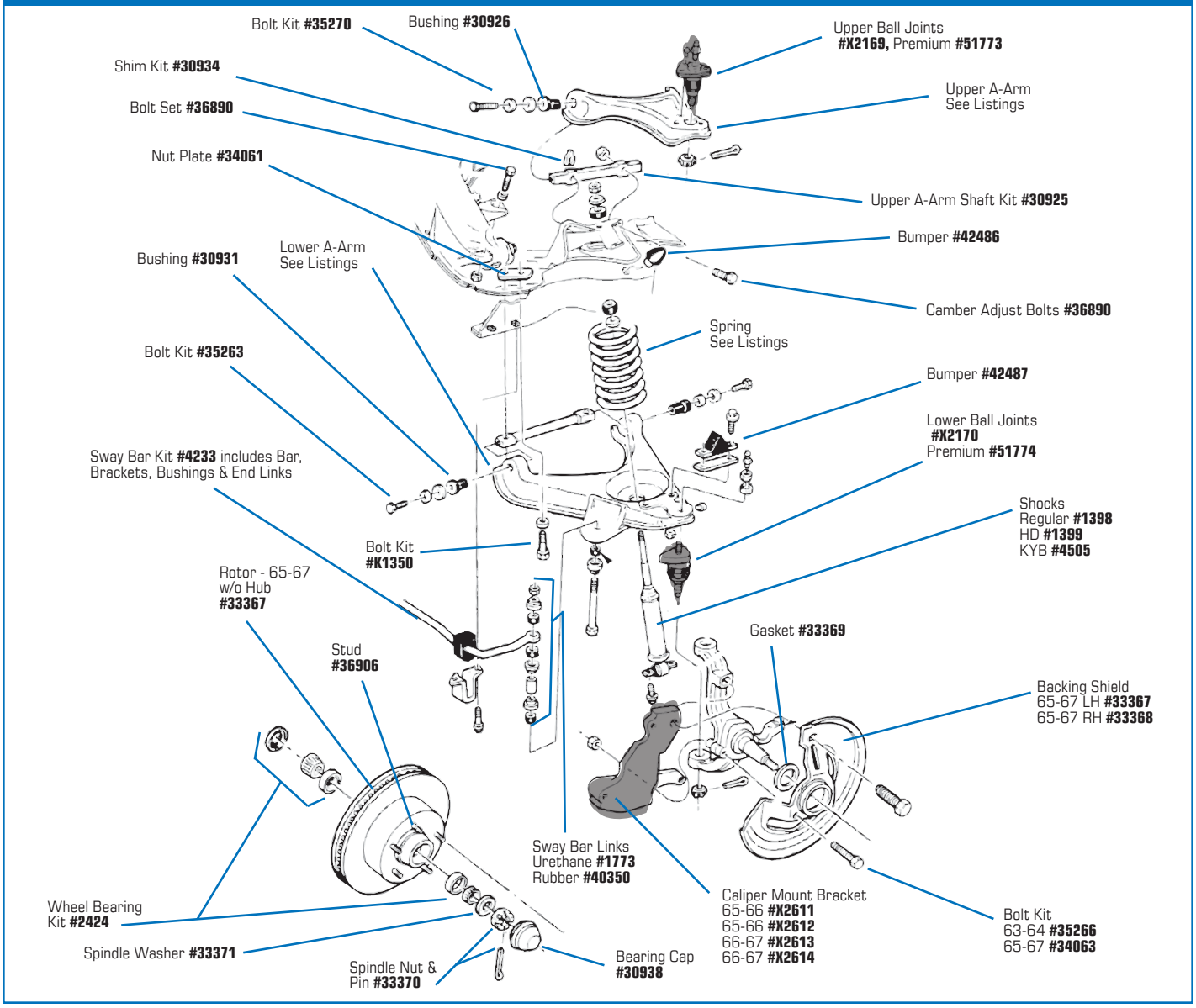

MOOG

1963-1967 Front Suspension Rebuild Kits

X2134	Deluxe Kit w/ Poly Bushings... BEST VALUE! $274.99				
X2133	Deluxe Kit w/ Rubber Bushings				
X2132	Standard Kit w/ Poly Bushing				
X2131	Standard Kit w/ Rubber Bushing..... $152.99	$183.99	$223.99		
X2170	Lower Ball Joint $24.99	2	2	2	2
X2169	Upper Ball Joint $24.99	2	2	2	2
X2105	Tie Rod End - LH..... $17.99	1	1	2	2
X2106	Tie Rod End - RH $17.99	1	1	2	2
X2168	A-Arm Bushings - Rubber - 8 pc..... $40.99	1	-	1	-
X2588	A-Arm Bushings - Poly - 8 pc... $75.99	-	1	-	1
40350	Sway Bar Links w/ Rubber Bushings - pr..... $12.99	1	-	1	-
1773	Sway Bar Links w/ Poly Bushings - pr $18.99	-	1	-	1
X2103	Idle Arm..... $40.99	-	-	1	1
X2104	Tie Rod Tube w/ 2 Clamps $17.99	-	-	2	2
33364	Bumper Set - Upper/Lower..... $20.99	-	-	1	1

Front Suspension Rebuild Kits include high quality components at an economical cost!

1963-1967 Professional Grade Rebuild Kits

51793	Deluxe Kit w/ Poly Bushings... BEST VALUE! $565.99				
51792	Deluxe Kit w/ Rubber Bushings				
51791	Standard Kit w/ Poly Bushing				
51790	Standard Kit w/ Rubber Bushing..... $320.99	$341.99	$534.99		
51774	Lower Ball Joint $45.99	2	2	2	2
51773	Upper Ball Joint $60.99	2	2	2	2
51770	Tie Rod End - LH..... $30.99	1	1	2	2
51771	Tie Rod End - RH $30.99	1	1	2	2
X2168	A-Arm Bushings - Rubber - 8 pc..... $40.99	1	-	1	-
X2588	A-Arm Bushings - Poly - 8 pc... $75.99	-	1	-	1
50939	Sway Bar Links w/ Rubber Bushings - pr..... $6.99	1	-	1	-
1773	Sway Bar Links w/ Poly Bushings - pr $18.99	-	1	-	1
51787	Idle Arm..... $65.99	-	-	1	1
51772	Tie Rod Tube w/ 2 Clamps $40.99	-	-	2	2
33364	Bumper Set - Upper/Lower..... $20.99	-	-	1	1

Professional Grade Rebuild Kits include premium quality name-brand components for superior quality!

#X2606 1963-67 Front Sway Bar - Correct Reproduction - F-40 & F-41 15/16"

#1790 Sway Bar Link Bushings - 8 pc set

#1773 Sway Bar Links w/Urethane Bushings

Front Sway Bar

X2606	63-67 Front Sway Bar - Correct Reproduction - F40 & F41 15/16"	$112.99
36900	63-67 Front Sway Bar Kit	$62.99
36894	63-67 Front Sway Bar Kit - 1 1/8"	$203.99
52478	63-67 Front Sway Bar Kit - Heavy Duty	$16.99
50939	63-67 Front Sway Bar Link - Rubber	$6.99
32895	63-67 Front Sway Bar Link Bushings - 8 pc	$11.99
36896	63-67 Front Sway Bar Link Kit w/ RWB Headmark	$19.99
37492	63-67 Front Sway Bar Link Kit w/ WB Headmark	$19.99
36895	63-67 Front Sway Bar Link Kit w/ WB2C Headmark	$31.99
42995	63-67 Front Sway Bar Bracket	$8.99
37324	63-67 Front Sway Bar Bracket Bolts - WB - 12 pc	$5.99
42994	63-67 Front Sway Bar Bushing - Rubber - 3/4"	$7.99
42999	63-67 Front Sway Bar Bushing - Rubber - Big Block	$6.99

Heavy Duty Front Sway Bar Kits

4233	63-67 Front Sway Bar Kit - 1" Bar w/ All mounting hardware	$203.99
4237	63-67 Front Sway Bar Kit - 1 1/4" Bar w/ All mounting hardware	$220.99

Sway Bar Accessories

Urethane Link Bushings virtually eliminate excessive leaning ("rollover") & slow response.

1790	63-67 Sway Bar Link Bushings - Urethane - Black - 8 pc	$9.99

Front Stabilizer Links

1773	63-67 Sway Bar Links w/ Urethane Bushings - pr	$18.99
40350	63-67 Sway Bar Links w/ Rubber Bushings - pr	$12.99

Sway Bar Brackets & Urethane Bushings hold sway bar mid-section to eliminate bushing deflection. Use with links (above) for peak sway bar performance. Sold in pairs.

Black Bushings:

42670	63-67 7/16"	$34.99
1870	63-67 9/16"	$18.99
1875	63-67 5/8"	$18.99
1876	63-67 3/4"	$18.99
1878	63-67 7/8"	$18.99
1879	63-67 1"	$18.99
1885	63-67 1 1/8"	$18.99

800-458-3475
CorvetteAmerica.com

WARNING: Cancer and Reproductive Harm — www.P65Warnings.ca.gov

#4505 KYB Gas Shock Absorber - Front

#43902 Front Heavy Duty Bilstein Shocks

#1398 Front Shocks

Front Shocks

Monotube construction, seamless eye rings and cylinder and unmatched valving action provide outstanding handling, improved traction and better response. **These long-lasting, trouble-free shocks outperform the rest, and are covered by a limited lifetime manufacturer's warranty.** For use with radial or bias-ply tires.

4505 63-67 KYB Gas Shock Absorber - Front $60.99
40578 63-67 KYB GR-2 Gas Shock Absorber - Front..... $56.99

Bilstein Shocks

Gas pressure shocks are constructed to dissipate heat more effectively to improve the ride, handling and control of your car.
Built to last with a lifetime warranty to prove it.

43902 63-67 Bilstein Shock - Heavy Duty - Front $112.99
43904 63-67 Bilstein Shock - Sport - Front..... $112.99
46635 63-67 Bilstein Shocks - Heavy Duty - Car Set $407.99
46636 63-67 Bilstein Shocks - Sport - Car Set..... $402.99

Monroe Shocks

40569 63-67 Shock Absorber - Front - Monroe - Gas $30.99
51267 63-67 Shock Absorber - Front - Monroe - Matic Plus $27.99
51266 63-67 Shock Absorber - Front - Monroe - Sensa-Trac.... $55.99
51268 63-67 Shock Absorber - Rear - Monroe - Sensa-Trac..... $40.99

Stock Shocks

1398 63-67 Shock Absorber - Front..... $47.99
1399 63-67 Shock Absorber - Front HD Suspension $44.99
34069 64-67 Shock Absorber Gray Paint..... $8.99
42491 63-64 Shock Mount Grommets - Lower - pr $4.99
42490 63-67 Shock Mount Grommets - Upper - pr..... $4.99
K1415 63-67 Shock Mount Nuts - Upper - pr $1.99
K1412 63-67 Shock Mount Screws - Lower - 4 pc set $2.99
42492 63 Shock Retainers - Lower - pr $3.99
42493 63-67 Shock Retainers - Lower - pr $5.99
42488 63-64 Shock Retainers - Upper - pr $4.99
43799 65-67 Shock Retainers - Upper - pr $9.99

Complete Front Monospring System

A complete system to replace your old, outdated coil springs and heavy factory A-Arms with lightweight Lower A-Arms and a specially designed, transversely mounted composite spring. Enhances ride and handling. **Fully adjustable. Ideal for all driving applications. Bolt-on installation. Covered by a manufacturer's 5-year, limited warranty.**

40585 63-67 Complete Front Monospring System $1141.99

Heavy Duty Upper A-Arms

Box-tube MIG welded A-Arms are stronger and lighter than stock. Poly bushings allow arms to pivot more freely with less deflection than stock rubber bushings. Relocated ball joint mounts are designed to allow up to 5° positive caster and a greater camber adjustment range for handling far superior to stock. A-Arms are shipped pre-assembled with offset cross-shafts, ball joints and poly bushings already installed. Ball joints included. **Limited lifetime warranty.**

40584 63-67 Upper A-Arms - Heavy Duty - Ball Joint - pr..... $550.99

Performance Front Coil Springs

For less money than a set of stock coils, you can upgrade your Corvette to Vette Brakes & Products' Performance Coil Springs. **They're made of high-grade American Steel, then powder coated for great looks, durability and corrosion resistance.** 1963-67 Performance Coil Springs give you even greater handling capacity, and lower your Corvette approximately 1" while upgrading to F-41 specifications.

20394 63-67 Front Coil Springs - 327 w/o AC - 460 lb - pr..... $89.99
40608 63-67 Front Coil Springs - 550 lb - Performance - pr $89.99
36832 63-67 Front Coil Springs - Big Block..... $74.99
29829 63-67 Spring Isolator TVL-RDM Style - 4 pc $21.99

Reproduction Front Springs

20391 63-67 327 Standard - 63 Replacement - 293# - pr.....$121.99
20392 65-67 396 / 427 w/o AC - pr.....$175.99
36835 66-67 427 w/ AC - pr.....$149.99

WARNING: Cancer and Reproductive Harm — www.P65Warnings.ca.gov

BEST SELLER! *Our Reproduction Rear Spindles are used by National Leading Rebuilders! Thousands sold!*

#X2620 Rear Spring Crossmember Bushing

#30981 1965-67 Reproduction Rear Spindle

REAR SUSPENSION

22370	65-67 Backing Shield - Silver - LH	$25.99
22371	65-67 Backing Shield - Silver - RH	$25.99
K1290	63-67 Backing Shield Nuts & Lock Washers - 16 pc	$4.99
41001	65-67 Brake Caliper Mount Bracket - Rear - LH	$51.99
30982	65-67 Brake Caliper Mount Bracket - Rear - RH	$51.99
29875	65-67 Brake Caliper Mnt Bolt & Lock Washer - 8 pc	$11.99
2014	65-67 Brake Rotor - Rear - No Rivet Holes - Repro	$61.99
35287	65-67 Brake Rotor to Spindle Rivets - 10 pc	$8.99
30978	63-67 Camber Adjustment Bolt Kit	$16.99
30948	63-67 Differential Carrier Bolt Kit	$4.99
40602	63-67 Differential Crossmember Reinforcing Kit	$54.99
30960	63-67 Driveshaft w/ U-Joint	$242.99
42502	63-67 Driveshaft U-Joint - Correct	$36.99
30752	63-67 Driveshaft U-Joint - Replacement	$18.99
30962	63-67 Driveshaft U-Joint U-Bolt w/ Nut Kit - 2 pc	$7.99
33269	64-67 Driveshaft Yoke U-Bolt Kit	$12.99
X2593	64-67 Driveshaft / Transmission Slip Yoke	$133.99
30965	63-67 Driveshaft / Half Shaft U-Joint	$18.99
36926	63-67 Half Shaft French Locks w/ Hardware Kit	$40.99
52151	65-67 Half Shaft French Locks w/o Hardware - 4 pc	$4.99
35285	63-64 Half Shaft French Locks - 4 pc	$20.99
42500	63-67 Half Shaft U-Joint - Correct	$40.99
30753	63-67 Half Shaft U-Joint - Replacement	$15.99
36922	63-67 Half Shaft U-Joint Flange	$45.99
35286	63-67 Half Shaft U-Joint Flange Bolts - 8 pc	$9.99
36923	63-67 Half Shaft U-Joint - U-Bolt, Nut & Washer Kit	$10.99
36925	63-67 Half Shaft U-Joint Retainer Cap Bolt Set - HD	$10.99
30966	63-67 Half Shaft w/ U-Joints - Core Charge Applies	$131.99
37509	63-67 Rear Alignment Shims - SS - 18 pc	$62.99
37508	63-67 Rear End Axle Deflector - 2 required	$2.99
30952	63-67 Rear End Front Mount Bolt Kit	$5.89
30950	63-67 Rear End Front Mount Cushion - Lower	$9.99
30951	63-67 Rear End Front Mount Cushion - Upper	$8.99
34814	63-67 Rear End Front Mount Cushions - Poly - pr	$12.99
30949	63-67 Rear End Front Mount Cushions w/ Bolt Kit	$22.99
30954	63-64 Rear End to Front Bracket Bolt Kit	$8.99
30955	65-67 Rear End to Front Bracket Bolt Kit	$15.99
37513	66-67 Rear End Pin	$40.99
K1475	63-67 Rear Leaf Spring Bolt Kit	$30.99
49580	65-67 Rear Rotor Shield - Silver LH - w/ Delco Stamp	$38.99
49581	65-67 Rear Rotor Shield - Silver RH - w/ Delco Stamp	$38.99
37327	63-65 Rear Spindle - 65 w/ Drum Brake	$203.99
30981	65-67 Rear Spindle - Reproduction - Import	$133.99
37328	65-67 Rear Spindle - w/ Castle Nut & Pin - USA	$193.99
37507	63-67 Rear Spring Adjust Bolt Kit - Rubber	$49.99
X2620	63-67 Rear Spring Crossmember Bushing	$66.99
52284	63-67 Rear Spring Crossmember Bushings - pr	$112.99
30947	63-67 Rear Spring Crossmember Bushing Bolt Kit	$1.99
52284	63-67 Rear Spring Cup Installation Tool	$112.99
30972	63-67 Rear Spring Mount Anchor Plate Bolt Kit - 4 pc	$14.99
30974	63-67 Rear Spring Mount Plate 5/8" Holes	$18.99
50656	63-67 Rear Wheel Bearing - Inner	$18.99
50664	63-67 Rear Wheel Bearing Race - Inner	$15.99
50654	63-67 Rear Wheel Bearing Seal - Inner	$5.99
50655	63-67 Rear Wheel Outer Bearing & Race	$10.99
50653	63-67 Rear Wheel Outer Bearing Seal	$7.99
42497	63-67 Spindle Bearing Housing - LH	$177.99
42498	63-67 Spindle Bearing Housing - RH	$177.99
43246	63-67 Spindle Bearing Shield - Inner	$5.99
30985	63-67 Spindle Flange	$71.99
46342	63-67 Spindle Flange - Greasable	$71.99
36908	63-67 Spindle Flange Deflector	$2.99
32873	63-67 Spindle Nut	$4.99
36909	63-67 Spindle Washer	$5.99
25429	63-67 Shock Mount w/ Nut - Lower Rear LH	$40.99
25430	63-67 Shock Mount w/ Nut - Lower Rear RH	$40.99
33387	63-67 Shock Mount Bolt Kit - Upper	$13.99
36904	63-67 Shock Mount Bracket - Upper - Welds to Frame	$15.99
33383	63-67 Shock Mount Castle Nuts - pr	$1.99
37325	63-67 Shock Mount Kit - Lower - 6 pc	$7.99
33388	63-67 Shock Mount Nuts - Lower - pr	$3.99
K1457	65-67 Stabilizer Link Bolts & Nuts - 8 pc	$3.99
25422	63-67 Strut Rod - Rear w/ Rubber Bushing - 1 3/16"	$50.99
25428	63-67 Strut Rod - Rear w/ Rubber HD Bushing - 1 3/8"	$50.99
K1351	63-67 Strut Rod Bracket to Differential Bolt Kit	$4.99
X2455	63-67 Strut Rod Bushing	$10.99
X2610	63-67 Strut Rod Bushings - 4 pc	$40.99
33374	63-67 Strut Rod Bushings - Poly - 1 3/16" - 4 pc	$50.99
33390	63-67 Strut Rod Bushing Cap - 4 req'd	$1.99
X2464	63-67 Strut Rods - Adjustable w/ Poly Bushings - pr	$112.99
30978	63-67 Strut Rod Camber Adjustment Bolt Kit - Replacement - correct alignment marks & hole	$16.99
30979	63-67 Strut Rod Camber Adjustable Bolt Kit - 2 req'd	$25.99
1884	63-67 Sway Bar Brackets w/ Bushings 15/16"	$18.99
22354	65-67 Trailing Arm Assembly - New - LH	$917.99
22355	65-67 Trailing Arm Assembly - New - RH	$917.99
32577	63-64 Trailing Arm - LH - Reproduction	$241.99
32578	63-64 Trailing Arm - RH - Reproduction	$241.99
32579	65-67 Trailing Arm - LH - Reproduction	$241.99
32580	65-67 Trailing Arm - RH - Reproduction	$241.99
1312	63-67 Trailing Arm Bolt	$5.99

800-458-3475
CorvetteAmerica.com
WARNING: Cancer and Reproductive Harm — www.P65Warnings.ca.gov

22129 63-67 Trailing Arm Bolt Kit - 10 pc - Includes: 2 each of Bolt, Flat Washer, Lock Washer, Nut & Pin $9.99
33385 63-64 Trailing Arm Bumper $29.99
33386 65-67 Trailing Arm Bumper $11.99
35283 63-64 Trailing Arm Bumper Bolt & Nut Set $2.99
K1395 64-67 Trailing Arm Bumper Nuts - pr $1.99
34071 63-67 Trailing Arm Bushing $8.99
30986 63-67 Trailing Arm Bushing Kit - Stock - 2 req'd $24.99
30987 63-67 Trailing Arm Bushings - Polyurethane - 4 pc $27.99
43203 63-67 Trailing Arm Bushings Kit - Polyurethane - Includes: Bushings, Inner Sleeves, Shims, Washers and Flaring Tool - Does both sides $55.99
43204 63-67 Trailing Arm Bushings Kit - Polyurethane - Includes: Bushings, Inner Sleeves, Outer Sleeves, Shims, Washers and Flaring Tool - Does both sides $75.99
34072 63-67 Trailing Arm Bushing Plate $0.99
34073 63-67 Trailing Arm Bushing Sleeve $4.99
34074 63-67 Trailing Arm Bushing Sleeve - SS $8.99
52150 65-67 Trailing Arm Cotter Pin $1.99
37326 63-64 Trailing Arm to Spindle Support Stud $36.99
36907 65-67 Trailing Arm to Spindle Support Stud Set $9.99
22356 65-67 Trailing Arm Shim Kit - 16 pc $45.99
42532 65-67 Trailing Arm Shim Kit - Stainless Steel w/ Bolts $40.99
36910 65-67 Trailing Arm Spindle Support Studs $2.99
X2615 63-67 Transmission Yoke Hardware Kit $4.99
49189 63-67 U-Joint Strap Kit - HD Long $18.99
49190 63-67 U-Joint Strap Kit - HD $94.99
2420 63-67 Wheel Bearing Kit - Rear - 6 pc $43.99
X2589 63-67 Wheel Bearing Shim & Spacer Kit - Does 1 Car $50.99
X2476 63-67 Wheel Bearing Shim & Spacer Kit - 11 pc $30.99
35288 63-67 Wheel Bearing Spacer $16.99
36906 63-67 Wheel Lug Stud $2.99

1963-1967 REAR SUSPENSION

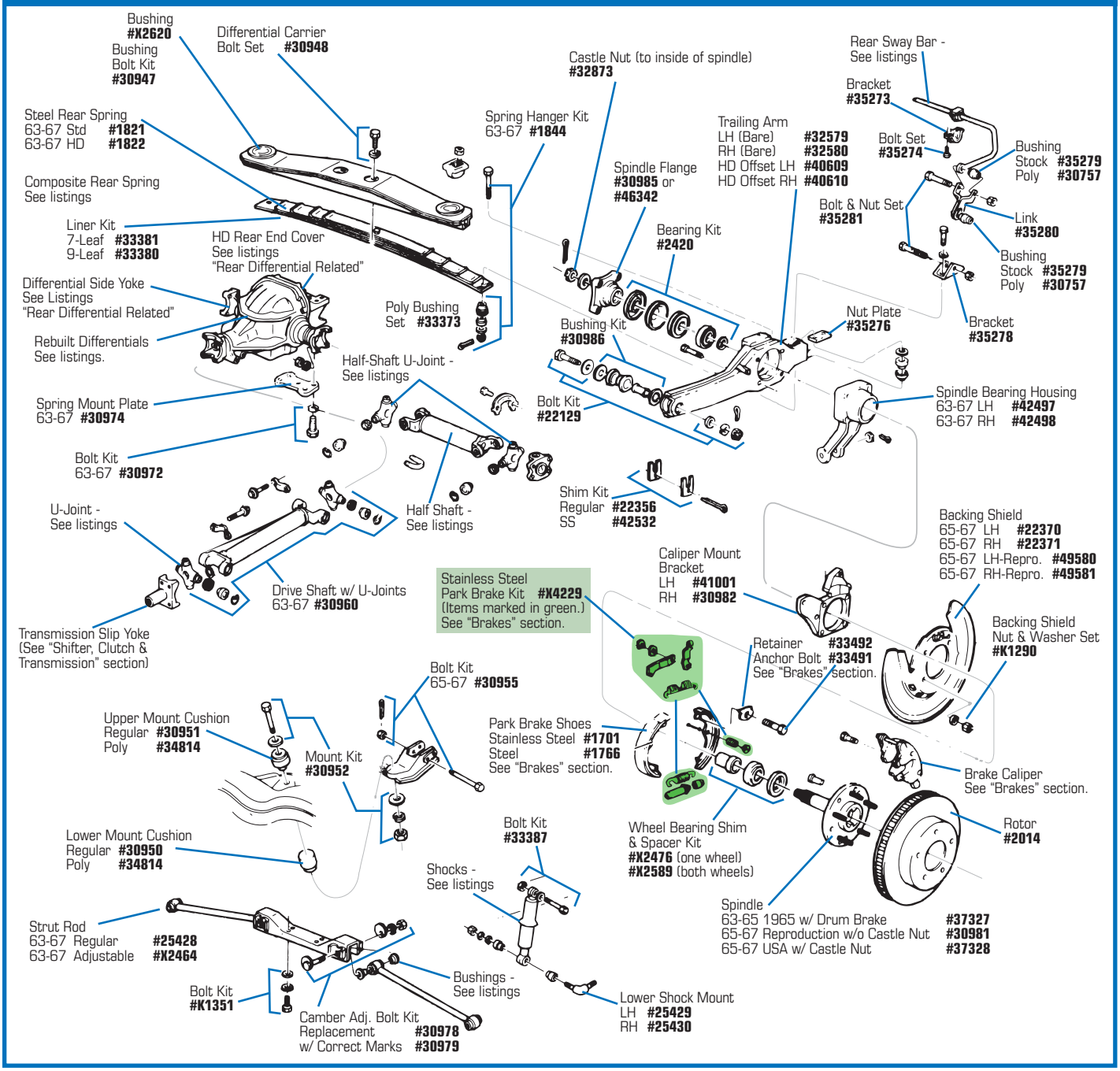

#40432 1965-67 Trailing Arm Assembly RH w/ New Rotor

1965-1967 Rear Wheel Bearings & Trailing Arm Assemblies - *NEW UNITS*

Assembled using new factory parts. Trouble-free service guaranteed by manufacturer for 3 years with unlimited mileage. Rear Wheel Bearing Assemblies available alone or with matched rotor that has been selectively aligned to spindle for minimum run out. Complete Trailing Arm Assemblies include stainless steel park brake kit preinstalled. Detailed installation instructions included for all items.

22350 65-67 Rear Wheel Bearing Assembly - LH $713.99
22351 65-67 Rear Wheel Bearing Assembly - RH $713.99
22352 65-67 Rear Wheel Bearing Assembly w/ Rotor - LH $795.99
22353 65-67 Rear Wheel Bearing Assembly w/ Rotor - RH $795.99
22354 65-67 Trailing Arm Assembly - LH $917.99
22355 65-67 Trailing Arm Assembly - RH $917.99

#22360 1965-67 Rear Wheel Bearing Assembly - LH

1963-1967 Rear Wheel Bearings & Trailing Arm Assemblies - *REBUILT Stock Units*

Guaranteed by manufacturer for 3 years with unlimited mileage!

22360 65-67 Rear Wheel Bearing Assembly - LH $318.99
22361 65-67 Rear Wheel Bearing Assembly - RH $318.99
22362 65-67 Rear Wheel Bearing Assembly w/ Rotor - LH $357.99
22363 65-67 Rear Wheel Bearing Assembly w/ Rotor - RH $357.99
22366 63-64 Trailing Arm Assembly - LH $550.99
22367 63-64 Trailing Arm Assembly - RH $550.99
40431 65-67 Trailing Arm Assembly - LH - w/ New Rotor $473.99
40432 65-67 Trailing Arm Assembly - RH - w/ New Rotor $473.99
29997 65-67 Trailing Arm Assembly Core Charge $407.99

Note: Each rebuilt unit requires an exchange of a like unit in good, non-damaged condition. All core charges must be paid at the time of purchase and will be refunded in full when exchange unit is received, examined and determined to be rebuildable. Refunds will be adjusted for non-reusable parts or repairs to parts with minor damage.

NEW Trailing Arms with Rotor

40436 65-67 Trailing Arm - New - w/ Rotor - LH $910.99
40437 65-67 Trailing Arm - New - w/ Rotor - RH $910.99

#40609

#40610

VAN STEEL
CORVETTE SUSPENSION BRAKES & STEERING PARTS

Heavy Duty Offset Trailing Arms

Use tires up to 2" wider than stock and still maintain factory spec. alignment. Centers weight over wheel bearings for less wear. Epoxy painted. Includes polyurethane bushings. **Five-year Limited Warranty.**

40609 63-67 HD Trailing Arm Assembly - 2" Offset - LH $274.99
40610 63-67 HD Trailing Arm Assembly - 2" Offset - RH $274.99
40613 63-67 Trailing Arm Assembly - HD Offset - pr $540.99

#X2478

#X2480 Trailing Arm Bushing Tool

#X2477

Suspension Tools

42770 63-67 Rear Spindle Bearing Puller $203.99
X2435 63-67 Rear Spindle Bearing Setup Tool $71.99
X2478 63-67 Rear Spindle Installation Tool $61.99
33393 63-67 Rear Spring Cup Installation Tool $43.99
1960 63-67 Rear Wheel Bearing Greaser $19.99
X2477 63-67 Spindle Knockout Tool $18.99
23061 65-67 Spindle Removal Press $302.99
42772 63-67 Suspension Tap & Die Set $26.99
X2480 63-67 Trailing Arm Bushing Installation Tool $50.99

WARNING: Cancer and Reproductive Harm — www.P65Warnings.ca.gov

#1821 1963-67 Steel Leaf Spring - Standard 9 Leaf

#1844 1963-67 Rear Spring Hanger Kit

#23061 1965-67 Spindle Removal Press

#42770 1963-1967 Rear Spindle Bearing Puller

#42772 1963-1967 Suspension Tap & Die Set

Steel Leaf Springs

42830	63-67 Rear Spring Bolts - 8" Adjustable - pr.	$24.99
43465	63-67 Rear Spring Bolts and Cushions - Poly - 8"	$45.99
42503	63-67 Rear Spring Center Bolt & Nut	$4.99
1844	63-67 Rear Spring Hanger Kit	$40.99
40589	63-67 Rear Spring Hanger Kit - Adjustable	$45.99
29827	63-67 Rear Spring Hanger Kit – w/Poly Cushions – Stock Length	$40.99
33380	63-67 Rear Spring Liner Kit - 9 Leaf	$45.99
33381	63-67 Rear Spring Liner Kit - 7 Leaf	$40.99
39887	63-67 Rear Spring Liners	$8.99
33377	63-67 Rear Spring Mount Bolt	$8.99
33379	63-67 Rear Spring Mount Castle Nut	$3.99
33375	63-67 Rear Spring Mount Cup	$2.99
33378	63-67 Rear Spring Mount Cushion - Rubber	$3.99
X2519	63-67 Rear Spring Mount Cushions - Rubber - 4 pc	$9.99
33373	63-67 Rear Spring Mount Cushions - Poly - 4 pc	$19.99
33376	63-67 Rear Spring Mount Washer	$1.99
1821	63-67 Steel Leaf Spring - Standard 9 Leaf	$174.99
1822	63-67 Steel Leaf Spring - HD 7 Leaf	$170.99

#4853 1963-67 Composite Spring

Composite Springs

New composite springs deliver more responsive handling, a smoother feel and a quieter ride. No modifications or frame adjustment required. Includes all hardware and instructions. Backed by a 2-year manufacturer's warranty.

4852	63-67 Composite Spring - 315 lb - SB Only	$401.99
4853	63-67 Composite Spring - 340 lb	$397.99
4854	63-67 Composite Spring - 355 lb	$397.99

Rear Spring Center Plate Mount Kit

Stamped from thicker gauge steel, these plate kits are stronger than factory steel plate kits, but look original. Complete kit includes OEM steel plate, lock washers, bolts and instructions.

40592	63-67 Rear Spring Center Plate Mount Kit	$30.99

New products always added!
Corvette America.com

NEW

Corvette America

Gift Certificates

*Delivered **FREE** via First-Class Mail.*

A Great Gift for any Corvette Enthusiast!

GC025	$25 Certificate	**$25**
GC050	$50 Certificate	**$50**
GC100	$100 Certificate	**$100**
GC200	$200 Certificate	**$200**
GC300	$300 Certificate	**$300**
GC400	$400 Certificate	**$400**
GC500	$500 Certificate	**$500**

Gift Certificates are Non-Transferable and Non-Refundable.

Rebuilt Rear Differential Units

Stock units are professionally rebuilt to meet or exceed factory standards with new bearings, seals, shims, clutch packs, carriers and gear sets. Guaranteed by manufacturer for one full year or 12,000 miles from date of purchase. Specify year and yoke size when ordering.

For 1963-1964 Rear End Differential Units just call for availability.

22180 65-67 Rear End Differential Unit - 3:08 - Rebuilt..... **$1162.99**
22182 65-67 Rear End Differential Unit - 3:36 - Rebuilt..... **$1162.99**
22183 65-67 Rear End Differential Unit - 3:55 - Rebuilt..... **$1162.99**
22184 65-67 Rear End Differential Unit - 3:70 - Rebuilt..... **$1162.99**
22186 65-67 Rear End Differential Unit - 4:11 - Rebuilt..... **$1162.99**

Note: Each unit requires an exchange of a POSI-TRACTION unit in good, rebuildable, non-damaged condition. All core charges must be paid at time of purchase & will be refunded when the exchange unit is received, examined & determined to be rebuildable. Returned core must be the same ratio as the differential purchased to qualify for full refund.

Rear Differential Components

41004 65-67 Differential Bearing & Seal Rebuild Kit..... **$187.99**
36912 63-67 Differential Front Flange Deflector **$10.99**
36913 63-67 Differential Front Flange Nut & Washer **$15.99**
42508 63-67 Differential Front Flange Shim Set **$21.99**
42506 63-66 Differential Front Flange Spacer - 66E..... **$16.99**
42507 66-67 Differential Front Flange Spacer - 66L..... **$15.99**
42509 63-67 Differential Front Pinion Bearing - Inner **$69.99**
36914 63-67 Differential Front Pinion Bearing **$34.99**
36915 63-67 Differential Front Pinion Seal **$5.99**
36916 63-67 Differential Side Yoke Bearing - Inner..... **$13.99**
36917 63-67 Differential Side Yoke Bearing - Outer..... **$18.99**
42504 63-67 Differential Side Yoke "C" Clips - pr..... **$2.99**
36918 63-67 Differential Side Yoke Seal **$7.99**
36921 63-67 Differ. Side Yoke Exc. HD Rebuilt w/Core Charge **$115.99**
25431 63-67 Differential Side Yoke Standard - New **$123.99**
25432 63-67 Differential Side Yoke - Heavy Duty - New **$123.99**
22194 63-67 Differential Side Yoke - Heavy Duty - Refurbished - Core Charge Applies..... **$126.99**
49190 63-67 U-Joint Strap Kit - HD..... **$94.99**

Differential Mount Bushing & Bolt Kit

Directly replaces stock rubber cushions. Poly bushings are longer lasting, tougher and self-lubricating. They also help to eliminate vibration.

40598 63-67 Differential Mount Bushing & Bolt Kit - Poly **$30.99**

#X2511 1963-67 Rear End Cover

#50668 1963-67 Rear End Pinion Inner Bearing

Heavy Duty Rear End Cover

Our Heavy Duty Rear End Cover is guaranteed not to break. No modifications required.

X2511 63-67 Rear End Cover - Heavy Duty..... **$153.99**
22495 63-67 Rear End Cover Gasket **$6.99**
52250 63-67 Rear End Cover Installation Kit: Cover Gasket, Cover to Diff. Bolts & Washers, SS Filler Plug, Filler Plug Gasket & Vent. **$33.99**
30958 63-67 Rear End Cover to Housing Bolt/Washer Kit -16 pc **$8.99**
42842 65-67 Rear End Drain Plug - SS..... **$14.99**
35742 63-64 Rear End Filler Plug..... **$16.99**
35743 63-67 Rear End Filler Plug Gasket..... **$1.99**
35746 63-67 Rear End Vent **$4.99**
30959 63-67 Rear End Bearing & Seal Rebuild Kit - 8 pc **$101.99**
50663 63-67 Rear End Pinion Front Bearing **$19.99**
51011 63-67 Rear End Pinion Front Bearing Race **$11.99**
50668 63-67 Rear End Pinion Inner Bearing..... **$24.99**
50667 63-67 Rear End Pinion Inner Bearing Race..... **$8.99**

#4506 KYB Rear Gas Rear Shock

Rear Shocks

KYB shocks feature monotube construction, seamless eye rings and seamless cylinder, specifically calibrated for Corvettes!

4506 63-67 KYB Gas Shock Absorber - Rear **$74.99**
40579 63-67 KYB GR-2 Gas Shock Absorber - Rear..... **$58.99**
40568 63-67 Monroe Gas Shock Absorber - Rear **$30.99**
1403 63-67 Shock Absorber Rear - Stock..... **$47.99**
33387 63-67 Shock Mount Bolt Kit - Upper **$13.99**
36904 63-67 Shock Mount Bracket - Welds to Frame - Upper . **$15.99**
32888 63-67 Shock Mount Cupped Washer - Lower **$2.99**
37325 63-67 Shock Mount Kit - Lower - 6 pc **$7.99**
33388 63-67 Shock Mount Nuts - Lower - pr **$3.99**

Bilstein Gas Shock Absorbers

Gas pressure shocks are constructed to dissipate heat more effectively to improve the ride, handling and control of your car. Built to last and a lifetime warranty to prove it.

43903 63-67 Bilstein Shock - Rear - Heavy Duty **$124.99**
43905 63-67 Bilstein Shock - Rear - Sport..... **$111.99**
46635 63-67 Bilstein Shocks - Heavy Duty - Car set..... **$407.99**
46636 63-67 Bilstein Shocks - Sport - Car set..... **$402.99**

WARNING: Cancer and Reproductive Harm — www.P65Warnings.ca.gov

#35275 1965-67 Stabilizer Bar - 9/16" - 396/427

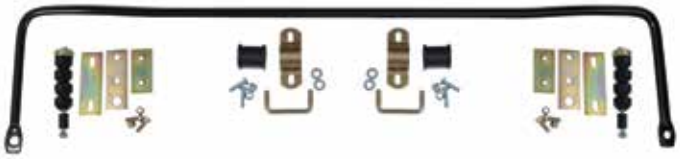

#4232 1963-67 Rear Sway Bar w/ Hardware

#36930 1963-67 Rear Sway Bar Kit - 5/8"

Rear Sway Bar

36924 65-67 Half-Shaft U-joint Retainer Cap $55.99
35744 63-67 Rear Axle Housing / Bearing Retainer $15.99
36930 63-67 Rear Sway Bar Kit - 5/8" $142.99
4246 63-67 Rear Sway Bar Kit - 3/4" $183.99
4232 63-67 Rear Sway Bar w/ Hardware - 3/4"- Replace $147.99
4240 63-67 Rear Sway Bar w/ Hardware - 7/8"- w/OEM Bar. $152.99
35275 65-67 Stabilizer Bar - 9/16" - 396 / 427 ..... $271.99
35278 65-67 Stabilizer Bar Bracket on Trailing Arm $7.99
35276 65-67 Stabilizer Bar Bracket Nut Plate on Trailing Arm - 396 / 427 ..... $8.99
35277 65-67 Stabilizer Bar Bracket Nut Plate Bolt Set..... $3.99
35279 65-67 Stabilizer Bar Bracket & Link Bushing - 396 / 427. $6.99
35272 65-67 Stabilizer Bar Bushing - Rear - 396 / 427..... $7.99
35273 65-67 Stabilizer Bar Bushing Bracket on Frame $9.99
35274 65-67 Stabilizer Bar Bushing Bracket Bolts - 4 pc..... $5.99
35282 65-67 Stabilizer Bar Bushing Retainer..... $7.99
35280 65-67 Stabilizer Bar Link..... $14.99
35281 65-67 Stabilizer Bar Link Bolts & Nuts - 8 pc..... $5.99
40497 63-67 Sway Bar Bracket - Rear Outer..... $13.99
30757 65-67 Sway Bar Bushings - Poly - 4 pc..... $19.99

1963-67 REAR SWAY BAR - 396/427

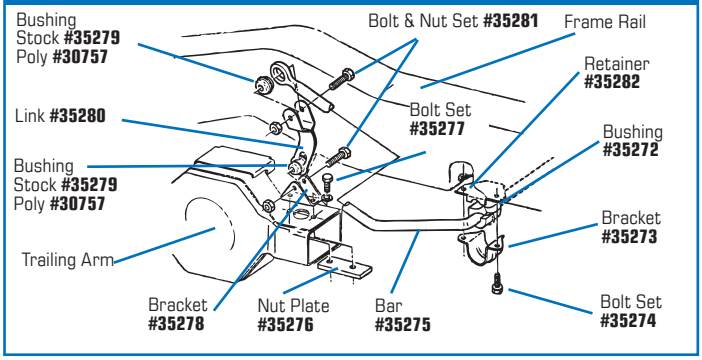

Discounts & Coupons Emailed!

Enter your email address on CorvetteAmerica.com

#40595

Poly Smart Strut® Kits

Polyurethane Smart Struts eliminate change in rear wheel camber. At 2 1/2" of wheel travel, the 1963 Corvette rear camber setting changes over 2°. The same car equipped with Smart Struts has measured camber change of less than one-tenth of a degree at over 5 1/2" of wheel travel– now that's proven results! Smart Struts are guaranteed to improve handling and reduce uneven tire wear. **They also reduce hub bearing wear by reducing side loading. Limited lifetime warranty.**

Poly Smart Strut Kits include:

- Custom Strut Rod Mounting Brkt
- Polyurethane Rod End Bushings
- Camber Adjustment Cams
- All Hardware & Instructions

40595 63-67 Poly Smart Strut Kit $244.99

Rear Suspension Hardware Kits

All the nuts, bolts, washers, lock washers, slotted nuts, castle nuts, cushions and cotter pins needed to rebuild, repair or replace the same items in the following areas:

- Center & Outer Rear Springs
- Outer Half Shafts
- Upper & Lower Shocks
- Strut Rod Brackets
- Strut Rod Adjusting Cams
- Rear Crossmember
- Carrier Bracket w/Cushions
- Trailing Arm

1807 63-64 Rear Suspension Hardware Kit - 120 pc $172.99
1808 65-67 Rear Suspension Hardware Kit $142.99

Poly Adjustable Strut Rods *Now with Forged Ends!*

Designed to help keep rear tires in correct vertical alignment, Adjustable Strut Rods decrease negative camber settings that can wear down your tires and adversely affect your car's handling. These rods are stronger than stock and feature polyurethane bushings for long life. Best of all, there are no adjustment cams - simply lengthen or shorten the strut rods by turning them, then tightening the jam nuts– that's it! Poly Adjustable Strut Rods give you triple the adjustment range of stock camber adjustment rods.

X2464 63-67 Strut Rods - Poly - Adjustable - pr $112.99

WARNING: Cancer and Reproductive Harm — www.P65Warnings.ca.gov

Touring Suspension Kit

This specially designed package improves both ride and handling. Balanced anti-sway bars assure flat, neutral steering. New springs restore ride height and lifetime gas shocks smooth and control your Corvette. Upgrade the 9-Leaf Steel Spring in the standard touring kit to a 330# Composite Monospring for only $100 more!

Touring Suspension Kit includes:

- 1.125" Front Anti-Sway Bar Kit
- KYB GR-2® Shocks
- .750" Rear Anti-Sway Bar Kit
- 9-Leaf Steel Spring
- 460 lb./in Powder Coated Coil Springs
- Leaf Spring Hardware Kit

40605 63-67 Susp. Kit - Touring **$815.99**
40606 63-67 Susp. Kit - Touring w/ Monospring **$891.99**

Upgrading your suspension is a sound investment that yields immediate performance benefits!

Corvette America Suspension Kits reward you with superior ride and handling from premium quality components. Once you've experienced the smooth performance you'll wonder how you ever got along without it!

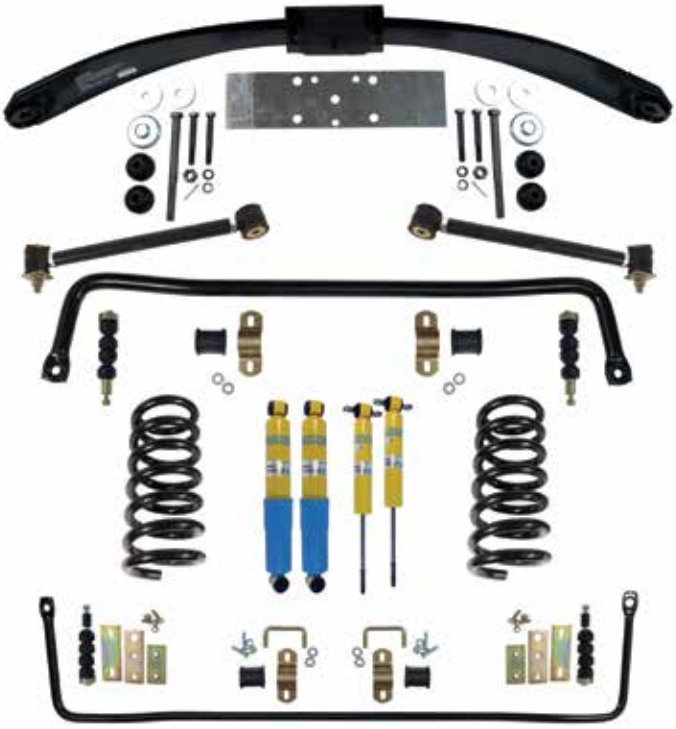

Performance Suspension Kit

Designed for more aggressive driving, this package is a step above the famous F-41 option. Monospring rides better than a steel spring, gas shocks dampen better and adjustable strut rods lock down the rear end. Performance Suspension Kit includes:

- 1.125" Front Anti-Sway Bar Kit
- Bilstein® Shocks
- 355 lb. Composite Monospring
- .750" Rear Anti-Sway Bar Kit
- Poly Adjustable Strut Rods
- 550 lb. Powder Coated Coil Springs
- Monospring Hardware Kit

40607 63-67 Suspension Kit - Performance **$1274.99**

Note: All Suspension Kits contain oversized packages and require additional freight charges. Please ask your sales representative for details.

CoilOver System w/ Rebound Adjustable Shocks

The RideTech CoilOver System for your Corvette includes everything you need to make your vintage classic handle like a new Corvette. The package contains front upper and lower control arms, tall spindles, billet steering arms, inner & outer tie rods, front MuscleBar, rear trailing arms and 4 HQ Series CoilOvers for every corner of your vehicle. The benefit of buying a complete suspension system is that RideTech has removed the guesswork by collecting data to determine the perfect spring rates and components to improve your vehicle's performance and ride quality. Requires part #22377 Stock or part #22376 Upgrade Brake Kit.

52490 63-67 Coilover System - Front & Rear w/ Rebound Adjustable Shocks **$7011.99**

800-458-3475
CorvetteAmerica.com
WARNING: Cancer and Reproductive Harm — www.P65Warnings.ca.gov

#22359 and #22368

These kits are assembled to order, and are tailored to your engine size and chassis options for greatly improved handling. Other spring, shock, and bushing options are available for track enthusiasts; as well as complete rear arm assemblies with bearings and rotors pre-installed. Call with your specific needs and let us build a kit custom tailored for you!"

Coil Over Suspension Conversion Kits

Coil Over Suspension Kits make it possible to gain all the advantages of a coil over suspension and fine-tune your ride with much more control and versatility. With the turn of a knob you can make your suspension stiffer and more responsive for track days, or more plush and comfortable for daily driving conditions. Personalize your settings to strike your own custom balance of comfort and handling.

VAN STEEL
CORVETTE SUSPENSION BRAKES & STEERING PARTS

#22357 and #22358

ADVANTAGES OF A COILOVER SETUP:

- Easier suspension adjustments
- Makes all four corners truly independent
- Maintains a consistent spring rate regardless of suspension travel or deflection
- High-quality shocks are rebuildable and revalve-able
- Shocks are more rigidly mounted for better performance & durability.

22368 63-67 Front Coil Over - Upper & Lower A-Arms - SB..**$2243.99**
22359 63-67 Front Coil Over - Upper & Lower A-Arms - BB..**$2243.99**
22357 63-67 Rear Coil Over w/ Offset Trailing Arm - SB.....**$1498.99**
22358 63-67 Rear Coil Over w/ Offset Trailing Arm - BB.....**$1488.99**

CORVETTES at CARLISLE® PRESENTED BY Corvette America

We are proud to be the presenting sponsor of the world's largest Corvette event! Corvettes at Carlisle features more than 5,000 Corvettes of all generations.

August 22-25, 2019 • CarlisleEvents.com

WARNING: Cancer and Reproductive Harm — www.P65Warnings.ca.gov

TOP VIEW

Detroit Speed Suspension Kits

Detroit Speed's Independent Coilover Suspension Kits give you the control to set up your 1963-1982 Corvette with superior handling, improved ride quality, precision steering, greater adjustability and faster spring changes. Kits are available with Non- Adjustable, Single-Adjustable or Two-Way-Adjustable Shock Absorbers.

Detroit Speed SpeedRay Front Suspension Kits

The system features 'Detroit Tuned' quick ratio power rack and pinion steering along with forged in the USA DSE aluminum uprights. The bolt-on powder-coated cradle assembly improves suspension geometry, provides rigid mounting for the rack and pinion, and includes integrated tie down eyelets. DSE/JRi 'Detroit Tuned' Coilover shocks/springs allow for spring rate tuning and ride height adjustment. It also includes a splined anti-roll bar with aluminum arms, composite bushings, powder coated tubular upper and lower control arms with Delrin bushings, forged offset upper control arm mounting brackets with caster tuner bushings to optimize suspension geometry and provide clearance for Gen V LT4 engines. The kit also includes Torrington bearings and a spanner tool for easy spring height adjustments. The body and engine do not need to be removed for installation of the SpeedRay™ front suspension. Available as a bolt-in kit.

SpeedRay Features:

- TIG-welded tubular upper & lower control arms
- Detroit Speed/JRi aluminum body coilover shocks with "Detroit Tuned" valving - Detroit Speed / JRi Shock upgrades available.
- Coilover Springs
- "Detroit Tuned" power rack & pinion steering
- Integrated splined sway bar with composite bushings
- Forged control arm cross shafts with caster tuner bushing
- Forged aluminum Detroit speed spindles
- Made in the USA

SPEEDRAY INDEPENDENT FRONT SUSPENSION

52607	63-67	Front Suspension w/Fab Uppr CoilOver - Mounts, Non-Adj Shocks, 550lb/In Spring	**$5864.99**
52608	63-67	Front Suspension w/Fab Uppr CoilOver - Mounts, Dbl-Adj Shocks, 550lb/In Spring	**$6884.99**
52609	63-67	Front Suspension w/Fab Uppr CoilOver - Mounts, Dbl-Adj w/Can Shocks, 550lb Spring	**$7190.99**
52610	63-67	Front Suspension w/Fab Uppr CoilOver - Mounts, Sgl-Adj Shocks, 550lb/In Spring	**$6323.99**
52611	63-67	Front Suspension w/Fab Uppr CoilOver - Mounts, Non-Adj Shocks, 650lb/In Spring	**$5864.99**
52612	63-67	Front Suspension w/Fab Uppr CoilOver - Mounts, Dbl-Adj Shocks, 650lb/In Spring	**$6884.99**
52613	63-67	Front Suspension w/Fab Uppr CoilOver - Mounts, Dbl-Adj w/Can Shocks, 650lb Spring	**$7190.99**
52614	63-67	Front Suspension w/Fab Uppr CoilOver - Mounts, Sgl-Adj Shocks, 650lb/In Spring	**$6323.99**
52615	63-67	Front Suspension w/Bolt-in Uppr CoilOver - Mounts, Non-Adj Shocks, 550lb Spring	**$6119.99**
52616	63-67	Front Suspension w/Bolt-in Uppr CoilOver - Mounts, Dbl-Adj Shocks, 550lb Spring	**$7139.99**
52617	63-67	Front Suspension w/Bolt-in Uppr CoilOver - Mounts, Sgl-Adj Shocks, 550lb Spring	**$6527.99**
52618	63-67	Front Suspension w/Bolt-in Uppr CoilOver - Mounts, Non-Adj Shocks, 650lb Spring	**$6119.99**
52619	63-67	Front Suspension w/Bolt-in Uppr CoilOver - Mounts, Dbl-Adj Shocks, 650lb Spring	**$7139.99**
52620	63-67	Front Suspension w/Bolt-in Uppr CoilOver - Mounts, Sgl-Adj Shocks, 650lb Spring	**$6527.99**

800-458-3475
CorvetteAmerica.com
WARNING: Cancer and Reproductive Harm — www.P65Warnings.ca.gov

Detroit Speed Suspension Kits

Detroit Speed's Independent Coilover Suspension Kits give you the control to set up your 1963-1982 Corvette with superior handling, improved ride quality, precision steering, greater adjustability and faster spring changes. Kits are available with Non- Adjustable, Single-Adjustable or Two-Way-Adjustable Shock Absorbers.

Detroit Speed DECAlink™ Rear Suspension Kits

The DECAlink™ Independent Rear Suspension features an exclusive DSE suspension geometry for superior handling and ride quality. The IRS utilizes modern CV axle shafts and hub bearings, keeping suspension loads from being transmitted through the axle shafts. The DECAlink™ IRS works with an original 17-spline differential assembly with upgrades to 30-spline or a Hammerhead 12-bolt differential. Note: Minimal welding is required.

DECAlink Features:

- Detroit Speed aluminum uprights forged in the USA
- Detroit Speed/JRi "Detroit Tuned" coilover shocks - (upgrades available)
- Coilover springs
- Rear Sway Bar
- Torrington bearings

MADE IN THE USA

Independent Rear Suspension

52590	63-67	Independent Rear Suspension - Non-Adj Shocks - 17 Spline Axles - 600hp DSE	**$9128.99**
52591	63-67	Independent Rear Suspension - Dbl-Adj w/ Can Shocks - 17 Spline 600hp DSE	**$9128.99**
52592	63-67	Independent Rear Suspension - Sgl-Adj w/ Can Shocks - 17 Spline 600hp DSE	**$9919.99**
52593	63-67	Independent Rear Suspension - Non-Adj Shocks 30 Spline Axles - 600hp DSE	**$9128.99**
52594	63-67	Independent Rear Suspension - Dbl-Adj w/ Can Shocks - 30 Spline 600hp DSE	**$10454.99**
52595	63-67	Independent Rear Suspension - Sgl-Adj w/ Can Shocks - 30 Spline Axles	**$9919.99**
52596	63-67	Independent Rear Suspension - Non-Adj Shocks - 30 Spline Axles - 1200hp DSE	**$9842.99**
52597	63-67	Independent Rear Suspension - Dbl-Adj - w/ Can Shocks - 30 Spline 1200hp DSE	**$11168.99**
52598	63-67	Independent Rear Suspension - Sgl-Adj - w/ Can Shocks - 30 Spline 1200hp DSE	**$10633.99**
52599	63-67	Independent Rear Suspension - Dbl-Adj - w/ Can Shocks - Hammerhead 600hp DSE	**$10021.99**
52600	63-67	Independent Rear Suspension - Sgl-Adj - w/ Can Shocks - Hammerhead 600hp DSE	**$9511.99**
52601	63-67	Independent Rear Suspension - Dbl-Adj - w/ Can Shocks - Hammerhead 1200hp DSE	**$10735.99**
52602	63-67	Independent Rear Suspension - Sgl-Adj - w/ Can Shocks - Hammerhead 1200hp DSE	**$10225.99**

WARNING: Cancer and Reproductive Harm — www.P65Warnings.ca.gov

Switches

#1266 1964-67 Headlight Switch

#29145 1964-67 Back-up Lamp Switch - 4 speed

#30030 Dimmer Switch

#1054 Courtesy Lamp Switch

#30034 Brake Light Switch

#1089 1963-67 Power Window Switch

Switches

29145	64-67	Back-Up Lamp Switch - 4 Speed	$67.99
30055	64-67	Back-Up Lamp Switch Bracket	$12.99
28647	63	Back-Up Lamp Switch Bracket Kit - 63E	$72.99
28648	63-67	Back-Up Lamp Switch Bracket Kit - 63L	$60.99
33395	64-67	Back-Up Lamp Switch Rod	$4.99
30056	64-67	Back-Up Lamp Switch Shield	$9.99
30034	63-67	Brake Light Switch	$9.99
50697	67	Brake Light Switch w/o Cruise	$12.99
1054	63-67	Courtesy Lamp Switch	$9.99
30030	63-67	Dimmer Switch	$11.99
33392	63-67	Dimmer Switch Mounting Plate	$8.99
1053	64-66	Emergency Brake Light Switch	$4.99
1263	63-67	Headlight Bucket Limit Switch - 2 req'd	$10.99
0160	63	Headlight Switch - Dash	$30.99
1266	64-67	Headlight Switch - Dash	$20.99
1261	63-67	Headlight Retract Switch	$102.99
30052	63-67	Heater Blower Switch	$111.99
33389	63-64	Ignition Switch - Replacement	$19.99
27417	63-65	Ignition Switch Nut - Chrome	$14.99
42456	66-67	Ignition Switch - Replacement	$54.99
50682	63-67	Neutral Safety Switch	$26.99
51302	67	Park Brake Warning Switch	$24.99
1089	63-67	Power Window Switch	$96.99
1806	65-66	Power Antenna Switch	$101.99
37331	63-67	Power Window Switch Cup Mount Plate	$9.99
0238	63	Turn Signal Switch	$45.99
2120	64-66	Turn Signal Switch - w/o Tele	$66.99
44981	65-66	Turn Signal Switch - w/ Tele	$126.99
2121	67	Turn Signal Switch	$101.99
2148	65-66	Wiper Switch	$48.99
34923	63-67	Wiper Switch Nut	$6.99

Tires

Tires

Warranted by the manufacturer against defective workmanship for the life of the tread.

35768	63-64	6.70 x 15 Firestone Tire - 1" Whitewall	$203.99
35770	63-64	6.70 x 15 Firestone Tire - Blackwall	$203.99
1782	63-64	6.70 x 15 Goodrich Tire - 1" Whitewall	$198.99
1783	63-64	6.70 x 15 Goodrich Tire - Blackwall	$203.99
51871	63-64	6.70 x 15 Goodyear Tire - 1" Blackwall - 4 Ply	$219.99
51872	63-64	6.70 x 15 Goodyear Tire - 1" Whitewall - 4 Ply	$229.99
35765	63-64	6.70 x 15 US Royal Tire - 1" Whitewall	$238.99
35769	63-64	6.70 x 15 US Royal Tire - Blackwall	$208.99
1785	65	7.75 x 15 Goodrich Tire - 1" Whitewall	$234.99
51874	65	7.75 x 15 Goodyear Tire - 1" Whitewall	$319.99
37340	65-66	7.75 x 15 Firestone Tire - Gold Line	$285.99
1788	65-66	7.75 x 15 Goodrich Tire - 3/8" Gold Line	$263.99
51875	65-66	7.75 x 15 Goodyear Tire - 3/8" Gold Line	$319.99
51876	65-66	7.75 x 15 Goodyear Tire - 5/8" Whitewall	$319.99
37337	65-67	7.75 x 15 Firestone Tire - Blackwall	$203.99
37338	65-67	7.75 x 15 Firestone Tire - 5/8" Whitewall	$216.99
37339	65-67	7.75 x 15 Firestone Tire - 7/8" Whitewall	$223.99
1784	65-67	7.75 x 15 Goodrich Tire - Blackwall	$218.99
1786	66-67	7.75 x 15 Goodrich Tire - 5/8" Whitewall	$234.99
51873	65-67	7.75 x 15 Goodyear Tire - Blackwall	$295.99
37341	67	7.75 x 15 Firestone Tire - Red Line	$282.99
1787	67	7.75 x 15 Goodrich Tire - 3/8" Red Line	$263.99
51877	67	7.75 x 15 Goodyear Tire - 3/8" Red Line	$319.99
42810	65-66	P205 / 75R15 Goodyear Radial - Gold Line	$305.99
42807	67	P205 / 75R15 Goodrich Radial - Red Line	$305.99
35294	63-67	Tire Valves w/ Caps - OEM - 5 pc set - 63-64 All, 65-66 KO, 67 All	$11.99
35295	65-66	Tire Valves w/Caps-OEM - 5pc - for Steel Wheels	$11.99

800-458-3475
CorvetteAmerica.com

WARNING: Cancer and Reproductive Harm — www.P65Warnings.ca.gov

WEATHERSTRIP

Corvette America now carries Weatherstrip Components and Kits in two different materials, each material offering its own features and advantages. Choose the material that's right for your needs!

USA-MADE EPDM* RUBBER

When QUALITY counts...Get the look and feel of original Latex weatherstrip with the superior durability of EPDM Rubber. USA weatherstrip formula has the soft and supple feel of original style latex weatherstrip. Includes a 5 Year Warranty!

- ***EPDM boasts longer life span over original latex weatherstrip.***
- ***Dipped "Latex" finish for superior appearance out of the package.***
- ***Made in America — supports American Workers!***
- ***Includes a 5 Year Replacement Warranty***

BEST CHOICE FOR THE QUALITY DISCERNING CONSUMER.

★★★★★ **BEST VALUE!**

1963-67 Coupe Body WS Kits - USA

Our complete, prepackaged Weatherstrip Kits remove the guess work & contain all the top-quality components for your Coupe.

23715 63 — 18 pc.Kit - Includes: Door Mains, Door Auxiliaries, Above Door on Body, Hinge Pillars, Outer Window Seals, Front & Rear Vent Windows,Windshield Channel, Hood Ledge & Split Window Channels - USA - (A - F, H-J) $509.99

23716 64-67 — 16 pc.Kit - Includes: Door Mains, Door Auxiliaries, Above Door on Body, Hinge Pillars, Outer Window Seals, Front & Rear Vent Windows, Windshield Channel & Hood Ledge - USA - (A - F, H-J) $407.99

23717 63-67 — 9 pc.Kit - Includes: Hood Door Mains, Above Door on Body & Drip Moldings - USA - (A - D, G)..... $223.99

See Diagram on next page.

COUPE WEATHERSTRIP - USA EPDM

A.	**42800**	63-67 Above Door on Body Weatherstrips - Repro. - pr	$136.99
*	**33400**	63 Above Door on Body Weatherstrip Screw Set	$11.99
*	**33401**	64-67 Above Door on Body Weatherstrip Screw Set	$11.99
B.	**1752**	63-67 Body Hinge Pillars Weatherstrip - LH - USA	$21.99
B.	**1753**	63-67 Body Hinge Pillars Weatherstrip - RH - USA	$21.99
*	**K1227**	63-67 Body Hinge Pillar Fastener Kit - 8 pc	$4.99
*	**33398**	63-67 Body Hinge Pillar WS Retainer Screw Set - Coupe.	$4.99
C.	**32608**	63-67 Door Main Weatherstrip - LH - USA	$22.99
C.	**32609**	63-67 Door Main Weatherstrip - RH - USA	$22.99
D.	**50507**	63-67 Hood Weatherstrip - USA	$7.99
E.	**1342**	63-67 Window Channel Weatherstrip	$44.99
F.	**1704**	63 Split Window Weatherstrip - pr	$91.99
G.	**43177**	63 Door Drip Moldings - Correct - pr	$35.99
G.	**1340**	63-67 Door Drip Moldings - 63 Replac. - LH - USA	$12.99
G.	**1341**	63-67 Door Drip Moldings - 63 Replac. - RH - USA	$12.99
H.	**43132**	63-67 Front Vent Windows Weatherstrip - LH - USA	$53.99
H.	**43133**	63-67 Front Vent Windows Weatherstrip - RH - USA	$53.99
*	**K1228**	63-67 Door Drip Molding Retainer Set - 8 pc	$5.99
I.	**43157**	63-67 Rear Vent Windows Weatherstrip - pr	$36.99
J.	**1661**	63-67 Outer Window Seals - pr	$24.99

* Not included in Weatherstrip Kits

CONVERTIBLE DOOR WEATHERSTRIP

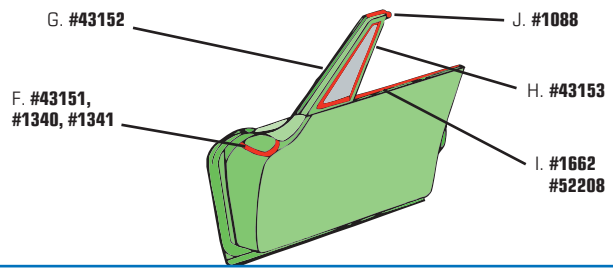

★★★★★ **BEST VALUE!**

1963-67 Convertible WS Kits - USA

Our complete, prepackaged Weatherstrip Kits remove the guess work. They include all the top-quality Corvette weatherstrip components you need for your Convertible.

23711 8 pc. Kit - Includes: Deck Lid, Door Mains, Door Auxiliaries, Body Hinge Pillars & Hood Ledge - USA (A - D, F) $203.99

23710 17 pc. Kit - Includes: all Weatherstrips shown in the Conv. Door & Body diagrams - USA (A - J) $422.99

CONVERTIBLE WEATHERSTRIP - USA EPDM

A.	**1333**	63-67 Body Hinge Pillar WS - Convertible - LH - USA	$35.99
A.	**1334**	63-67 Body Hinge Pillar WS - Convertible - RH - USA	$35.99
*	**33397**	63-67 Body Hinge Pillar WS Retainer - SS - Convertible.	$33.99
*	**33399**	63-67 Body Hinge Pillar WS Fastener Kit - Convertible	$7.99
B.	**35158**	63-67 Deck Lid Weatherstrip	$33.99
C.	**1336**	63-67 Door Main Weatherstrips - LH - USA	$45.99
C.	**1337**	63-67 Door Main Weatherstrips - RH - USA	$45.99
D.	**50507**	63-67 Hood Weatherstrip - USA	$7.99
E.	**1343**	63-67 Windshield Channel Weatherstrip	$57.99
F.	**1340**	63-67 Drip Moldings - LH - USA	$12.99
F.	**1341**	63-67 Drip Moldings - RH - USA	$12.99
*	**K1228**	63-67 Door Drip Molding Retainer Set - 8 pc	$5.99
G.	**43152**	63-67 Front Vent Windows Weatherstrip - pr	$107.99
H.	**43153**	63-67 Rear Vent Windows Weatherstrip - pr	$32.99
I.	**1662**	63-67 Outer Window Seals - pr	$24.99
J.	**1088**	63-67 Upper Window Stop Weatherstrip - 2 req'd	$6.99
	1386	63-67 Top Side Rail 2R - Convertible	$32.99

* Not included in Weatherstrip Kits

The Best Value in Weatherstrip

Corvette America

CORVETTE AMERICA WEATHERSTRIP KITS

Corvette America offers complete Weatherstrip Kits in your choice of materials. Remove the guess work and save money on all the weatherstrip components you need.

Corvette America's Weatherstrip Kits provide the Best Value in Weatherstrips for your Corvette.

Discounts & Coupons Emailed!

Enter your email address on CorvetteAmerica.com

WARNING: Cancer and Reproductive Harm — www.P65Warnings.ca.gov

CONVERTIBLE BODY WEATHERSTRIP

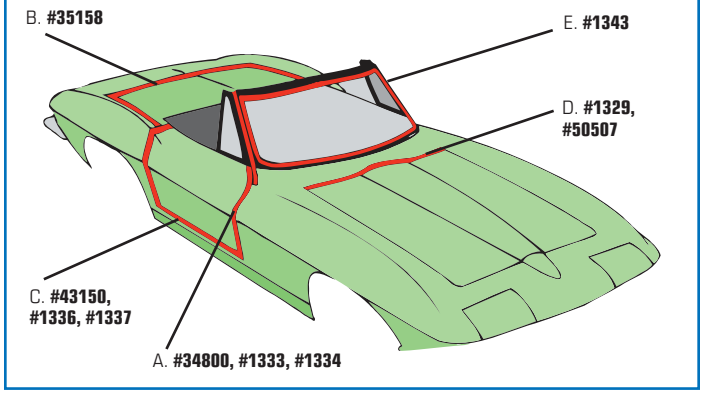

1963 SPLIT WINDOW WEATHERSTRIP

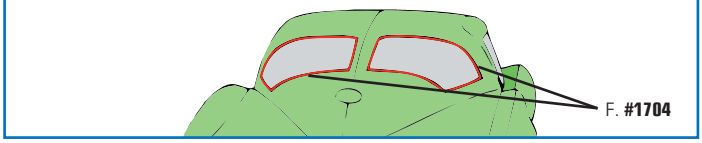

1963-67 COUPE BODY WEATHERSTRIP

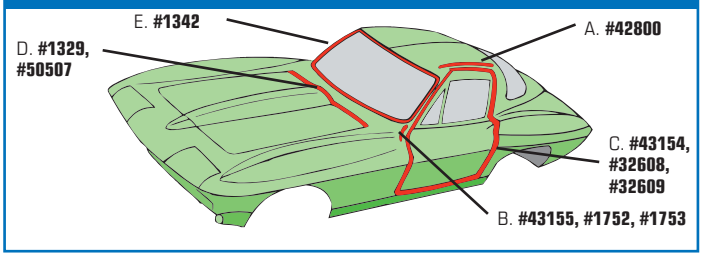

1963-67 DOOR WEATHERSTRIP

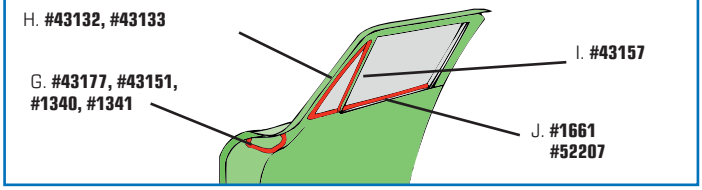

GOOD VALUE!

1963-67 Convertible WS Kits - Import

Our complete, prepackaged Kits remove the guess work. Includes all the top-quality Corvette weatherstrip components you need for your Convertible. **Import kits contain Import pieces when available & USA pieces where Import pieces are not available.**

X2203 8 pc. Kit - Includes: Deck Lid, Door Mains, Drip Moldings, Body Hinge Pillars & Hood Weatherstrips (A - D, F) $184.99

X2204 17 pc. Kit - Includes: all Weatherstrips shown in the Convertible Door & Convertible Body diagrams (A - J) $401.99

IMPORT EPDM* SPONGE RUBBER

- *Provides an economical alternative vs. USA & Latex.*
- *EPDM boasts longer life span over original latex Weatherstrip.*
- *Includes 2-Year Replacement Warranty!*

BEST CHOICE FOR THE VALUE CONSCIENCE CONSUMER.

*EPDM — Ethylene Propylene Diene Monomer

CONVERTIBLE WEATHERSTRIP - IMPORT EPDM

A.	**34800**	63-67 Body Hinge Pillar WS - Convertible - Import - pr	$61.99
*	**33397**	63-67 Body Hinge Pillar WS Retainer - Convertible - SS	$33.99
*	**33399**	63-67 Body Hinge Pillar WS Fastener Kit - Convertible	$7.99
C.	**43150**	63-67 Door Main Weatherstrips - Import - pr	$74.99
D.	**1329**	63-67 Hood Weatherstrip - Import	$5.99
F.	**43151**	63-67 Drip Moldings - Import - pr	$12.99
I.	**52208**	63-67 Outer Window Seals - Convertible - Import - pr	$14.99
*	**K1228**	63-67 Door Drip Molding Retainer Set - 8 pc	$5.99

* Not included in Weatherstrip Kits

#1337 1963-67 Door Main Weatherstrip

#35158 1963-67 Deck Lid Weatherstrip

#1343 1963-67 Windshield Channel Weatherstrip

#1386 1963-67 Top Side Rail

GOOD VALUE!

1963-67 Coupe Body WS Kits - Import

Our complete, prepackaged Weatherstrip Kits remove the guess work & contain all the top-quality components for your Coupe.

Import kits contain Import pieces when available & USA pieces where Import pieces are not available.

X2205 63-67 9 pc. Kit - Includes: Hood, Body Hinge Pillars, Door Mains, Above Door on Body & Drip Moldings (A - D, G) $205.99

X2207 63 18 pc. Kit - Includes every piece in diagrams that pertain to 1963 (A - J) $493.99

X2206 64-67 16 pc. Kit - Includes every piece that pertains to your model year (A - J) $390.99

COUPE WEATHERSTRIP - IMPORT EPDM

B.	**43155**	63-67 Body Hinge Pillars Weatherstrip - pr - Import	$35.99
*	**K1227**	63-67 Body Hinge Pillar Fastener Kit - 8 pc	$4.99
C.	**43154**	63-67 Door Main Weatherstrip - pr - Import	$30.99
D.	**1329**	63-67 Hood Weatherstrip - Import	$5.99
G.	**43151**	63-67 Door Drip Moldings - 63 Replac. - pr - Import	$12.99
*	**K1228**	63-67 Door Drip Molding Retainer Set - 8 pc	$5.99
J.	**52207**	63-67 Outer Window Seals - Coupe - Import - pr	$14.99

* Not included in Weatherstrip Kits

800-458-3475
CorvetteAmerica.com

WARNING: Cancer and Reproductive Harm — www.P65Warnings.ca.gov

SOFTTOP WEATHERSTRIP

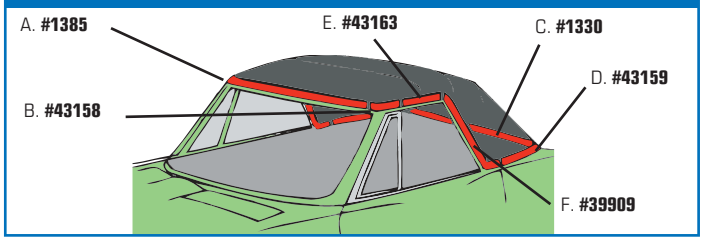

HARDTOP WEATHERSTRIP

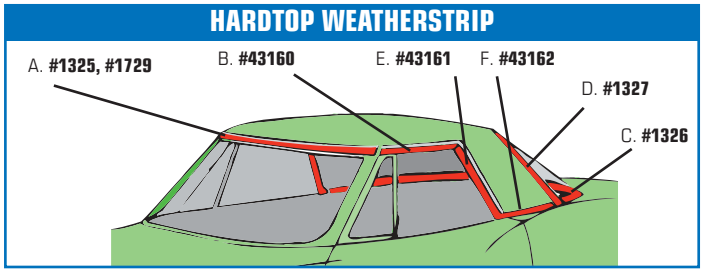

★★★★★ **BEST VALUE!**

1963-67 Softtop WS Kits - USA

Our complete, prepackaged Weatherstrip Kits remove the guess work. They include all the top-quality Corvette weatherstrip components you need for your Softtop.

X2208 63-67 10 pc. Kit - Includes: Header, Header Extensions, Horizontal Side Rails, Rear Wedges & Rear Bow (A - E) $272.99

K1051 63-67 Softtop Weatherstrip Fastener Kit - 54 pc.... $15.99

Softtop Weatherstrip - USA EPDM

A. **1385** 63-67 Header Weatherstrip $14.99
B. **43158** 63-67 Header Extensions Weatherstrip - pr $107.99
C. **1330** 63-67 Rear Bow Weatherstrip $21.99
* **34108** 63-67 Softtop Rear Bow Weatherstrip Retainer Cord $7.99
D. **43159** 63-67 Rear Wedges Weatherstrip - pr $42.99
E. **43163** 63-67 Side Rail Weatherstrip - pr $61.99
F. **39909** 63-67 Vertical Side Rails Weatherstrip - pr $65.99

#X2208 Softtop Weatherstrip Kit - 10 pc.

Kit includes: Header, Header Extensions, Horizontal Side Rails, Rear Wedges & Rear Bow

Gaskets, Liners and Seals

1167 63-66 A-Arm Flaps - pr $13.99
0998 67 A-Arm Flaps - pr $13.99
0654 63-67 A-Arm Flap Staple Set - SS - 25 pc $3.99
1576 63-64 Door Handle Gasket Set - 4 pc $3.99
1577 65-67 Door Handle Gasket Set - 4 pc $3.99
34060 63-67 Front Brake Splash Shield Gaskets $3.99
1665 63-67 Softtop Rear Latch Gaskets - pr $4.99
0177 63-67 Taillight Lens Gasket $1.99
25408 63 Window Channel - Coupe Rear & Upper - pr $149.99
52160 63 Window Seals - Outer - Coupe - Reproduction $35.99
52161 63 Window Seals - Outer - Conv - Reproduction $35.99
52162 64 Window Seals - Outer - Coupe - Reproduction $24.99
52163 64 Window Seals - Outer - Conv - Reproduction $32.99
52164 65-67 Window Seals - Outer - Coupe - Reproduction $32.99
52165 65-67 Window Seals - Outer - Conv - Reproduction $32.99

#X2209 Hardtop Weatherstrip Kit

★★★★★ **BEST VALUE!**

1963-67 Hardtop WS Kits - USA

Our complete, prepackaged Weatherstrip Kit removes the guess work. It includes all the top-quality Corvette weatherstrip components you need for your Hardtop.

X2209 63-67 9 pc. Kit - Includes: Inner Header, Outer Header, Side Horizontals, Side Verticals, Side Lower Extensions & Rear (A - C, E, F) $336.99
(Rear Window Weatherstrip sold separately)

42458 63-67 Hardtop Weatherstrip Screw Kit - 51 pc $16.99

Hardtop Weatherstrip - USA EPDM

A. **1325** 63-67 Header Weatherstrip - Inner $15.99
A. **1729** 63-67 Header Weatherstrip - Outer $21.99
* **33404** 63-67 Outer Header WS Retaining Clip Set - 13 pc $66.99
* **K1049** 63-67 Weatherstrip Fastener Kit - No Clips - 36 pc $5.99
B. **43160** 63-67 Hardtop Horizontals Weatherstrip - pr $135.99
C. **1326** 63-67 Rear Weatherstrip $38.99
* **33406** 63-67 Hardtop Rear Lower Molding & WS Screw Set $8.99
D. ***1327** 63-67 Rear Window Weatherstrip $38.99
E. **43161** 63-67 Hardtop Verticals Weatherstrip - pr $125.99
F. **43162** 63-67 Vertical Lower Extensions Weatherstrip - pr $68.99

* Not included in Weatherstrip Kit

Body Gasket Kits

Contains all the necessary gaskets & seals required when re-assembling your Vette after paint or restoration. For Coupes & Convertibles.

41824 63-64 Body Gasket Kit $40.99
41825 65-66 Body Gasket Kit $41.99
41826 67 Body Gasket Kit $48.99

Weatherstrip Installation

32914 Weatherstrip Adhesive - Black - 5 oz. $13.99
32915 Weatherstrip Adhesive - Yellow - 5 oz. $11.99
22605 Weatherstrip Installation Tool Kit - 4 pc $28.99

WARNING: Cancer and Reproductive Harm — www.P65Warnings.ca.gov

1963-66 Original Style KNOCKOFF WHEELS

Corvette America

Replicas of the Original Wheels produced with High Quality Details.

Corvette America EXCLUSIVE!

1963-1964 Original-Style Knockoff Wheel Set

22963 Light Face w/ Polished Stainless Steel Cones..... $2399.99

1965 Original-Style Knockoff Wheel Set

22965 Dark Face w/ Polished Stainless Steel Cones..... $2399.99

1966 Original-Style Knockoff Wheel Set

22966 Dark Face w/ Brushed Stainless Steel Cones..... $2399.99

Complete sets include:
- *4 Original Style Knockoff Wheels*
- *All of the Original Style Hardware*
- *Lug Nuts*
- *Reproduction Lead Hammer*
- *Installation Instructions*

On the Original style wheels, the wheel is retained on the car by tightening the spinner onto the adapter against the wheel with the lead hammer. On the Direct-Bolt Knockoff style, the wheel is retained by five lugnuts.

#2002 1963-66 Knockoff Spinner

#2047 Knockoff Adapter

#X1689 1966 Brushed S.S. Cone

#X1624 Center Cap

#2061 1965-66 Lead Hammer

#1617 Lug Nut

1963-1966 Original-Style Knockoff Wheels & Wheel Components

1618	63-66 Anti-Theft Pin	$2.99
1620	63-66 Anti-Theft Pin Set - 4 pc	$9.99
X1624	63-66 Center Cap	$15.99
39902	63-66 Center Cap Puller	$23.99
X1679	63-65 Cone - Polished Stainless Steel.	$34.99
X1689	66 Cone - Brushed Stainless Steel.	$34.99
2046	63-66 Knockoff Adapter - LH	$95.99
2047	63-66 Knockoff Adapter - RH	$95.99
2002	63-66 Knockoff Spinner - LH	$105.99
2003	63-66 Knockoff Spinner - RH	$105.99
3143	63-64 Knockoff Wheel - Light Face	$419.99
3144	65-66 Knockoff Wheel - Dark Face	$419.99
2060	63-64 Lead Hammer	$49.99
2061	65-66 Lead Hammer	$49.99
1617	63-66 Lug Nut	$2.99
1813	63-66 Lug Nuts - 20 pc	$44.99

All Corvette America 1963-66 Original Style Knockoff Wheel Hardware is interchangeable with the hardware originally supplied from the factory.

Only $2,399.99 Set. Hardware included!

800-458-3475
CorvetteAmerica.com

WARNING: Cancer and Reproductive Harm — www.P65Warnings.ca.gov

1963-66 Direct-Bolt KNOCKOFF WHEELS

Our Direct-Bolt Knockoff design combines Classic looks with Bolt-On Convenience.

Corvette America — Innovators of the Direct-Bolt Knockoffs!

1963-1964 Direct-Bolt Knockoff Wheel Set

22763 Light Face w/ Polished Stainless Steel Cones..... **$2399.99**

1965 Direct-Bolt Knockoff Wheel Set

22765 Dark Face w/ Polished Stainless Steel Cones..... **$2399.99**

1966 Direct-Bolt Knockoff Wheel Set

22766 Dark Face w/ Brushed Stainless Steel Cones..... **$2399.99**

Complete sets include:
- *4 Direct-Bolt Knockoff Wheels*
- *All the Hardware needed for each wheel.*
- *Lug Nuts*
- *Installation Instructions*

On the Direct-Bolt Knockoff style, the wheel is retained by five lugnuts. On the Original style wheels, the wheel is retained on the car by tightening the spinner onto the adapter against the wheel with the lead hammer.

#3227 Direct-Bolt Knockoff Adapter

Solid Diecast Spinners!

#2003 Direct-Bolt Knockoff Spinner

#X1679 Polished S.S. Cone

#X1624 Center Cap

#41657 Lug Nut

1963-1966 Direct-Bolt Knockoff Wheels & Wheel Components

1618	63-66 Anti-Theft Pin	$2.99
1620	63-66 Anti-Theft Pin Set - 4 pc	$9.99
X1624	63-66 Center Cap	$15.99
39902	63-66 Center Cap Puller	$23.99
X1679	63-65 Cone - Polished Stainless Steel	$34.99
X1689	66 Cone - Brushed Stainless Steel	$34.99
3226	63-66 Direct-Bolt Knockoff Adapter - LH Tall - 3.435"	$219.99
3227	63-66 Direct-Bolt Knockoff Adapter - RH Tall - 3.435"	$219.99
3026	63-66 Direct-Bolt Knock-Off Adaptor - LH	$209.99
3027	63-66 Direct-Bolt Knock-Off Adaptor - RH	$209.99
2002	63-66 Direct-Bolt Knockoff Spinner - LH	$105.99
2003	63-66 Direct-Bolt Knockoff Spinner - RH	$105.99
3140	63-64 Direct-Bolt Knockoff Wheel - Light Face	$419.99
3141	65-66 Direct-Bolt Knockoff Wheel - Dark Face	$419.99
K1034	63-66 Lug Nuts - 20 pc set	$17.99
25078	63-66 Screws & Washers Set	$18.99

With Direct-Bolt Knockoff Wheels you get original-style looks & ease of use. You don't need a lead hammer for the spinner installation; it mounts directly to a specially designed & patented wheel adaptor. The spinners are the same as those used on our Original Style Knockoffs, as are the Center Caps & Anti-theft pins.

Only $2,399.99 Set. Hardware included!

WARNING: Cancer and Reproductive Harm — www.P65Warnings.ca.gov

1967 **Bolt-On Wheels**

Reproduced to High Quality Standards.

Replicas of the Original Wheels & Hardware!

#1642 Retaining Ring

GM Approved Diecast Caps like the Originals!
Not Plastic.

#35322 1967 Center Cap

1967 Bolt-On Center Caps are not included with wheel set and must be purchased separately. ***Purchase a wheel set and pay only $30 each for the Center Caps!***

#1687 Starburst Center

#1693 Starburst Mounting Clips - 4 pc. set

1967 Bolt-On Wheel Set

22967 1967 Bolt-On Wheel Set **$2299.99**

Includes: **4 Wheels, 4 Retaining Rings, 4 Starburst Centers, 16 Mounting Clips, 4 Wheel Screw Sets and 20 Lugnuts.**

NOTE: Center Cap Emblems must be purchased separately.

#K1034 Lug Nuts - 20 pc.

#1694 Screw Set 17 pc - for 1 Wheel

All Corvette America 1967 Bolt-On Wheel Hardware is interchangeable with the hardware originally supplied from the factory.

1967 Bolt-On Wheels & Wheel Components

3142	67	Bolt-On Wheel	**$419.99**
35322	67	Center Cap	**$49.99**
41657	67	Lug Nut - each	**$1.99**
K1034	67	Lug Nuts - 20 pc	**$17.99**
1640	67	Retaining Ring	**$36.99**
1642	67	Retaining Ring - 0.86" Tall	**$36.99**
1694	67	Screw Set - 1 Wheel - 17 pc	**$13.99**
1687	67	Starburst Center	**$99.99**
1693	67	Starburst Mounting Clips - 4 pc	**$15.99**

General Motors trademarks used under license to Corvette America.

800-458-3475
CorvetteAmerica.com

WARNING: Cancer and Reproductive Harm — www.P65Warnings.ca.gov

#37332 1967 Rallye Wheel 15x6 Silver Powder Coated

#41856 1967 Chrome Rallye Wheel

1967 Rallye Wheel Set & Paint

Set includes: 4 Rallye Wheels, 4 OEM Trim Rings, 4 Hubcaps with centers, 20 lugnuts and 2 cans of Rallye Wheel paint.

41978	67	Rallye Wheel Set - Reproduction	**$1099.99**
41979	67	Rallye Wheel Set - Replacement	**$659.99**
37332	67	Rallye Wheel - 15x6 - Silver Powder Coated	**$116.99**
1593	67	Rallye Wheel Paint	**$12.99**

#1346 - OEM

1967 Trim Ring

Our polished stainless steel O.E.M. - Style Trim Rings have all the correct contours of the originals with slightly different fastening clips. Replacement trim rings are polished stainless steel & are practically indistinguishable from O.E.M. rings when installed.

1346	67	Trim Ring for Rallye Wheel - OEM	**$101.99**
1345	67	Trim Rings for Rallye Wheel - Replacement - 4 pc	**$101.99**

1967 Chrome Rallye Wheel

We take our OEM Style Rallye Wheel and apply a beautiful chrome finish on the entire wheel for a show stopping look!

43845	67	Chrome Rallye Wheel Set	**$642.99**
41856	67	Chrome Rallye Wheel	**$172.99**

#41971 1967 Hubcap w/ Disc Brake Center

#1393 1967 Hubcap Center

#23320 1967 Hubcap Center

#46466 1967 Hubcap Center Locks

1967 Rallye Hubcap with Center

23320	67	Hubcap Center	**$35.99**
41691	67	Hubcap Center - 4 pc	**$121.99**
1393	67	Hubcap Center - Rallye "Chevrolet Motor Division"	**$64.99**
41971	67	Hubcap w/ Disc Brake Center	**$60.99**
42511	67	Hubcaps w/ Disc Brake Center - 4 pc	**$126.99**
37336	67	Hubcap Center Screws - Rallye - 4 pc	**$5.99**
46466	67	Hubcap Center Locks - 4 pc	**$60.99**

WARNING: Cancer and Reproductive Harm — www.P65Warnings.ca.gov

#43128 1963 Spinner

#43129 1964 Spinner

#43074 1966 Spinner

#43131 1965-66 Hubcap Spinner Emblem w/ Black Upper

1963-1966 Steel Wheels

The wheels have "nubs" at the valve stem, just like the originals. All new tooling with exact details. This wheel is not a universal type of wheel with shared components from other wheels.

41861 63-64 Steel Wheel 15 x 5.5" $183.99
41862 63-64 Steel Wheel 15 x 5.5" - set of 4 ..... $662.99
41859 65-66 Steel Wheel 15 x 5.5" $187.99
41860 65-66 Steel Wheel 15 x 5.5" - set of 4 ..... $662.99

1963-66 Hubcap Spinners

43128 63 Hubcap Spinners - set of 4 ..... $193.99
43129 64 Hubcap Spinners - set of 4 ..... $193.99
43073 65 Hubcap Spinner Assembly Set $228.99
43074 66 Hubcap Spinner Assembly Set $228.99

1965-66 Hubcap Spinner Emblems

1588 65-66 Hubcap Spinner Emblem w/ White Upper LH $17.99
26657 65-66 Hubcap Spinner Emblem w/ Black Upper LH $17.99
43130 65-66 Hubcap Spinner Emblems w/ White Upper LH - 4 pc $81.99
43131 65-66 Hubcap Spinner Emblems w/Black Upper LH - 4 pc $81.99

Wheel & Hubcap Components

35296 63 Hubcap Spinner Reinforcement - 4 req'd $9.99
35297 64 Hubcap Spinner Reinforcement - 4 req'd $9.99
35298 65 Hubcap Spinner Reinforcement - 4 req'd $9.99
35299 66 Hubcap Spinner Reinforcement - 4 req'd $9.99
K1424 63-65 Hubcap Spinner Screws - Exc. 64 - 12 pc $5.99
K1425 64 Hubcap Spinner Screws - 16 pc $6.99
K1418 66 Hubcap Spinner Screws - 12 pc $5.99
26655 63 Hubcap Trim Bar $26.99
26656 63 Hubcap Trim Bar Set - 6 pc $152.99
K1417 63 Hubcap Trim Bar Screws - 12 pc - does 1 cap $5.99
43411 65 Hupcaps w/ Spinners - set of 4 ..... $611.99
43072 66 Hupcaps Spinner Spacer $32.99
35793 63-67 Valve Stems - Long - 5 pc $11.99
41657 63-67 Wheel Lug Nut - Standard - ea $1.99
K1034 63-67 Wheel Lug Nuts - Standard - 20 pc $17.99
41087 63-64 Wheel Lug Nuts - Rear - 1 3/8" - 5 pc $14.99
49423 63-64 Wheel Lug Stud Kit - 5pc $10.99
37505 65-67 Wheel Lug Studs w/ "TR" Headmark - 5 pc $7.99

Look for our name on the box!

We provide many of our products to other Corvette parts suppliers.

800-458-3475
CorvetteAmerica.com

WARNING: Cancer and Reproductive Harm — www.P65Warnings.ca.gov

1963-1966 Wheel & Tire Packages

Save time & money with our 1963-66 Wheel & Tire Packages! Get a set of tires mounted & balanced on Corvette America's 63-66 Replica Wheels! All the hardware included.

22767 63-64 DBKO Wheel & Tire Package - on Goodyear 6.70 x 15 - 1" Bias 4-Ply tires (#51872) **$3249.99**
22773 63-64 DBKO Wheel & Tire Package - Radial - on Goodyear P205 / 75-R15 Radial Tires (#51886) **$3499.99**
22768 65 DBKO Wheel & Tire Package - on BF Goodrich ..... P205/75-R15 Gold Line Radial Tires (#42810) . **$3499.99**
22769 66 DBKO Wheel & Tire Package - on BF Goodrich ..... P205/75-R15 Gold Line Radial Tires (#42810) . **$3499.99**
51719 63-67 Wheel & Tire Mounting & Balancing Labor - Each Wheel **$30.99**

All the correct DIRECT-BOLT KNOCKOFF Wheel hardware is included!

(4) Direct-Bolt Knockoff Wheels - either Light Face Replica (#3140) or Dark Face Replica (#3141).
(4) Direct-Bolt Knockoff Adapters (#3227)
(2) Solid Diecast LH Spinners (#2002)
(2) Solid Diecast RH Spinners (#2003)
(4) Center Caps (#X1624)
(4) Knockoff Spinner Anti-Theft Pins (#1618)
(4) Polished Stainless Steel Cones (#X1679) or Brushed Stainless Steel Cones (#X1689)
(20) Lugnuts for Direct-Bolt Knockoff Wheels (#1617)
(1) Direct-Bolt Knockoff Wheels Screw & Washer Set (#25078)
(4) Tire Mount & Balance • (1) Installation Instructions

1967 Wheel & Tire Package

Save time & money with our 1967 Wheel & Tire Package! Get a set of BF Goodrich P205/75-R15 Red Line Radial Tires mounted & balanced on Corvette America's 67 Bolt-On Replica Wheels! All the hardware included.

22968 67 Bolt-On Wheel & Tire Package - on BF Goodrich ..... P205/75-R15 Red Line Radial Tires (#42807) . **$3399.99**
35322 67 Bolt-On Center Cap **$49.99**
51719 63-67 Wheel & Tire Mounting & Balancing Labor - Each Wheel **$30.99**

All the correct BOLT-ON Wheel hardware is included!

(4) Bolt-On Wheels (#3142)
(4) Starburst Centers (#1687) • (4) Retaining Rings (#1642)
(4) Starburst Mounting Clip Sets (#1693) (16 Clips total)
(4) Wheel Screw Sets (#1694) (68 Screws total)
(20) Lugnuts (#41657)
(4) BF Goodrich P205/75-R15 Red Line Radial Tires (#42807)
(4) Tire Mount & Balance • (1) Installation Instructions
NOTE: 1967 Diecast Center Caps #35322 must be purchased separately.

WARNING: Cancer and Reproductive Harm — www.P65Warnings.ca.gov

Windshield & Windows

Windshield & Window Components

22216	63-67	Door Glass - Convertible - Clear - LH*	$203.99
22217	63-67	Door Glass - Convertible - Clear - RH*	$203.99
22218	63-67	Door Glass - Convertible - Tinted - LH*	$203.99
22219	63-67	Door Glass - Convertible - Tinted - RH*	$203.99
22220	63-67	Door Glass - Coupe - Clear - LH*	$212.99
22221	63-67	Door Glass - Coupe - Clear - RH*	$212.99
22222	63-67	Door Glass - Coupe - Tinted - LH*	$203.99
22223	63-67	Door Glass - Coupe - Tinted - RH*	$203.99
22236	64-67	Rear Window Glass - Tinted*	$423.99
28402	64-67	Rear Window Molding - Coupe - Corner	$42.99
43806	64-67	Rear Window Seal Kit	$21.99
22385	64-67	Rear Window Trim - Coupe - Inner - LH	$51.99
22386	64-67	Rear Window Trim - Coupe - Inner - RH	$51.99
22260	63	Split Rear Window Glass - Tinted - LH*	$423.99
22261	63	Split Rear Window Glass - Tinted - RH*	$423.99
22262	63	Split Rear Window Glass - Non-Tinted - LH*	$423.99
22263	63	Split Rear Window Glass - Non-Tinted - RH*	$423.99
22224	63-67	Vent Glass - Convertible - Clear - LH*	$186.99
22225	63-67	Vent Glass - Convertible - Clear - RH*	$186.99
22226	63-67	Vent Glass - Convertible - Tinted - LH*	$186.99
22227	63-67	Vent Glass - Convertible - Tinted - RH*	$203.99
22228	63-67	Vent Glass - Coupe - Clear - LH*	$186.99
22229	63-67	Vent Glass - Coupe - Clear - RH*	$186.99
22230	63-67	Vent Glass - Coupe - Tinted - LH*	$186.99
22231	63-67	Vent Glass - Coupe - Tinted - RH*	$186.99
25408	63	Window Channel - Coupe - Rear & Upper - pr	$149.99
22212	63-67	Windshield - Clear *	$341.99
22211	63-67	Windshield - Tinted *	$341.99
22384	64-67	Windshield Molding - Coupe - Outer Corner	$46.99
22382	64-67	Windshield Molding - Coupe - Outer - LH	$160.99
22383	64-67	Windshield Molding - Coupe - Outer - RH	$160.99
22381	64-67	Windshield Molding - Coupe - Outer Upper	$134.99
43498	63-67	Windshield Molding - Coupe - Lower Corner - pr.	$81.99
43448	64-67	Windshield Molding Clip - Coupe - Outer Corner	$8.99
34781	63-67	WS Molding Retainers - Interior Lower - 4 pc	$50.99
34782	63-67	WS Molding End Retainers - Interior Lower - pr	$10.99

*Additional shipping charges apply.

Wipers & Washers

#1890 1967 Washer Bag w/ AC

#X2564 Washer Bottle w/o AC

#1754 Chrome Washer Nozzles

#46336 1963-67 Correct Washer Nozzles

Wiper & Washer Components

34346	63-67	Aero-Rivet Tool	$96.99
1889	63-66	Washer Bag - w/ AC or w/ 396	$65.99
1890	67	Washer Bag - w/ AC	$65.99
1917	63-66	Washer Bag Bracket - w/ AC or w/ 396	$13.99
1918	67	Washer Bag Bracket - w/ AC	$27.99
42459	63-67	Washer Bag Bracket Rivet Set	$0.99
37343	63-67	Washer Bag Cap - w/ AC	$8.99
X2564	63-67	Washer Bottle - w/o AC	$13.99
28574	63-67	Washer Bottle Bracket - w/o AC	$19.99
36946	63-67	Washer Bottle Brkt to Fender Rivets - 3 pc	$1.99
28573	63-67	Washer Bottle Cap - Correct Reproduction	$4.99
41474	63-67	Washer Bottle Hose	$1.99
41476	63-67	Washer Bottle Kit - w/o AC	$22.99
33228	63-67	Washer Hose Clip On Firewall	$2.99
30080	63-67	Washer Hose Firewall Grommet Set - 2 pc	$5.99
53312	63-67	Washer Hose Grommets	$1.99
33408	63-67	Washer Hose Hood Latch Clip	$0.99
30084	63-67	Washer Hose Pickup Filter	$5.99
28499	63-67	Washer Hose Set. w/ Grommet w/ AC - or 396	$18.99
41475	63-67	Washer Fluid Pickup Filter-Correct w/Brass Screen	$12.99
53313	63-67	Washer Hose Set - w/ AC or 396 - 3 pc	$17.99
28498	63-67	Washer Hose Set w/ Grommet - w/o AC	$18.99
28498	63-67	Washer Hose Set w/ Grommet - w/o AC	$18.99
1754	63-67	Washer Nozzles - Chromed - pr	$19.99
1755	63-67	Washer Nozzle - Chromed - Replacement	$9.99
46336	63-67	Washer Nozzle Set - Correct	$61.99
1669	63-67	Washer Nozzle Gaskets - pr	$1.99
47977	63-67	Washer Pump Bellows Kit	$19.99
42462	63-67	Washer Pump Cover - Fiber	$4.99
41729	63-67	Washer Pump Rebuild Kit - White Deluxe	$15.99
39154	66-67	Wiper Arms - Brushed - Replacement - pr	$96.99
43549	63-65	Wiper Arms - Polished w/ Spring Shields - pr	$66.99

800-458-3475
CorvetteAmerica.com
WARNING: Cancer and Reproductive Harm — www.P65Warnings.ca.gov

35300	63-67 Wiper Arm Removal Tool	$7.99
28497	66-67 Wiper Blades - Dull Finish - pr	$73.99
43550	63-67 Wiper Blades - Polished	$50.99
37342	63-67 Wiper Blade Refill Inserts - pr	$38.99
34784	63-67 Wiper Grille - Black - LH	$81.99
34785	63-67 Wiper Grille - Black - RH	$81.99
34783	63-67 Wiper Grille Mount Screws & Nuts - 16 pc set	$6.99
42463	63-67 Wiper Motor Drive Rubber Seal	$6.99
1264	63-67 Wiper Motor Grommet	$6.99
42464	63-67 Wiper Motor Ground Terminal	$3.99
1262	63-67 Wiper / Headlight Motor Mount Grommet	$5.99
33409	63-67 Wiper Motor Mount Screws / Washer Set	$6.99
33410	63-67 Wiper Motor Push Rod Retainer	$1.99
33411	63-67 Wiper Motor Push Rod Spacer	$3.99
42465	63-67 Wiper Motor Rear Crank Lever	$13.99
42466	63-67 Wiper Motor Crank Lever Retainer Nut	$0.99
33413	63-67 Wiper Motor Seal	$14.99
1265	63-67 Wiper Mounting Bolt Kit	$5.99
29720	63-64 Wiper Switch - 2 speed w/ Washer	$49.99
33412	63-67 Wiper Transmission Shaft Covers - pr	$13.99

#28497 1966-67 Wiper Blades

#34346 Aero Rivet Tool

#29720 1963-64 Wiper Switch

#34785 1963-67 Wiper Grille - RH

1963-67 WINDSHIELD WIPERS & WASHER

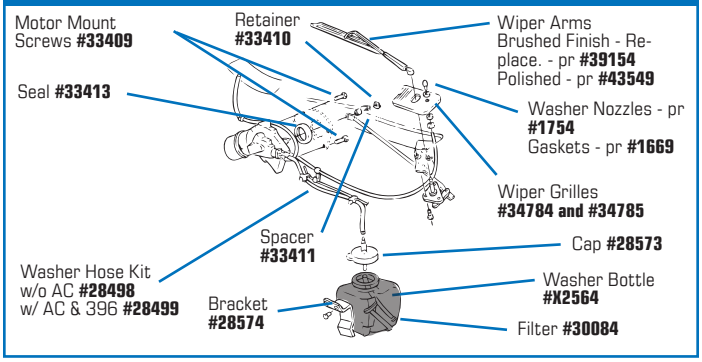

Discounts & Coupons Emailed!

Enter your email address on CorvetteAmerica.com

Selecta Speed Wiper Motor Kit

A downpour of rain will no longer hinder your ability to clearly see the road. This kit provides you with the performance and convenience of a late model wiper system in a package that easily and cleanly mounts in your car. The wiper kit contains a low profile, seven-speed wiper motor with 5 delays, low speed & high speed, rotary switch, adapter plate, and wiring harness. The CNC aluminum adapter plate mounts the wiper motor to the stock firewall bolt pattern and requires no permanent modifications to the vehicle. The supplied wiring harness uses the factory wiper grommet opening and requires no cutting of the factory harness. This allows owners the option to return their classic Corvette back to its original configuration, leaving no holes or spliced wires behind.

52393 63-67 Selecta Speed Wiper Motor Kit $586.99

Selecta Speed Washer Pump Kit

This Windshield Washer Pump Kit is designed to be used with the Selecta-Speed Wiper Motor Kit. This replaces the OEM washer pump. This kit has a push button function on the wiper switch. This kit also has a power and ground wire in the wiring harness to install the Washer Pump Kit.

52394 63-67 Selecta Speed Washer Pump Kit $45.99

Look for our name on the box!

We provide many of our products to other Corvette parts suppliers.

WARNING: Cancer and Reproductive Harm — www.P65Warnings.ca.gov

Serving the Corvette Community Since 1977.

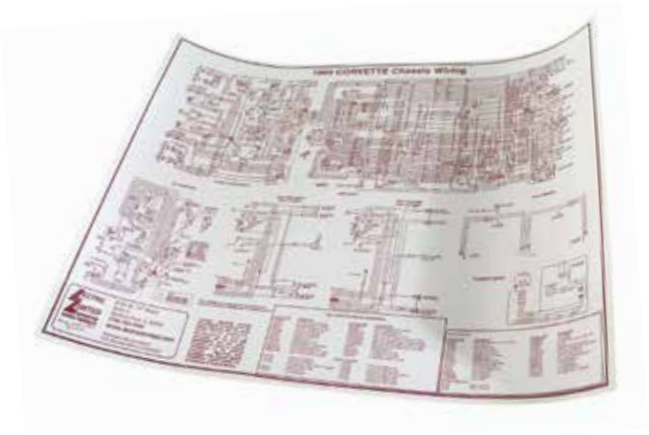

WIRING DIAGRAMS

Add the year range of your Corvette to the blank after the part number.

4900_ Wiring Diagram - Laminated 17" x 22" - ea $14.99

AIR CONDITIONING HARNESSES

29100	66	AC Harness w/ Heater Wiring	$132.99
29101	67	AC Harness w/ Heater Wiring	$132.99

DASH HARNESSES

29221	63	Dash Harness w/ Backup Lamps	$525.99
29222	63	Dash Harness w/o Backup Lamps	$525.99
29223	64	Dash Harness w/ Backup Lamps	$525.99
29224	64	Dash Harness w/o Backup Lamps	$525.99
29225	65	Dash Harness w/ Backup Lamps - w/ Solid Light Green Wire at Dimmer Switch Connector	$525.99
29228	65	Dash Harness w/o Backup Lamps - Black w/ Light green striped wire at dimmer switch connector	$525.99
29226	66	Dash Harness w/ Backup Lamps - Black w/ Light green striped wire at dimmer switch connector	$525.99
29229	67	Dash Harness - All	$525.99

ENGINE HARNESSES

29279	63	Engine Harness w/ AC	$209.99
29280	63	Engine Harness w/o AC	$181.99
29282	64-65	Engine Harness w/ AC - All 64, 1965 Black w/ Pink striped wire at the Positive side of coil	$209.99
29284	64-65	Engine Harness w/o AC - All 64, 1965 Black w/ Pink striped wire at the Positive side of coil	$181.99
29325	64-65	Engine Harness w/ Fuel Injection	$187.99
29281	65	Engine Harness w/ AC - Solid Pink wire at the Positive side of coil	$209.99
29283	65	Engine Harness w/o AC - Solid Pink wire at the Positive side of coil	$181.99
29285	65	Engine Harness - 396 - Solid Pink wire at the Positive side of coil	$181.99
29286	65	Engine Harness - 396 - Black w/ Pink striped wire at Positive side of coil	$181.99
29287	66	Engine Harness - Includes Forward Lamp Wiring	$363.99
29288	67	Engine Harness - Includes Forward Lamp Wiring	$363.99

#29288 1967
Engine & Front Lamp Harness

#29222 1963 Dash Harness w/o Backup Lamps

#29282 1964-65
Engine Harness w/ AC

#29592 1966
Rear Lamp Harness

FORWARD LAMP & PARK LAMP HARNESSES

29335	63	Front Lamp Harness	$181.99
29337	64-65	64 All - 65 Black w/ Light Green striped wire at Headlight Connector	$181.99
29287	66	Includes Engine Harness	$363.99
29288	67	Includes Engine Harness	$363.99

FUEL TANK SENDER HARNESSES

29365	63	35.5 Gallon Tank	$45.99
29366	64	35.5 Gallon Tank	$45.99
29367	65-67	35.5 Gal. Tank - tape wrapped - solid color wire	$45.99
29368	65	35.5 Gallon Tank - uses 3-wire ripcord, black / tan & black w/ pink stripe	$45.99

GROUND STRAP KIT

29392	63	w/ Side Exhaust	$27.99
29393	63	w/ Standard Exhaust	$33.99
29394	64-67	w/ Side Exhaust	$27.99
29395	64-67	w/ Standard Exhaust	$30.99
22104	67	w/ Side Exhaust	$27.99
22105	67	w/o Side Exhaust	$30.99

HEADLIGHT BUCKET EXTENSION HARNESSES

29417	63	w/ Fiberglass Buckets - pr	$63.99
29419	63-65	63 w/ Metal Buckets, 64 All, 65 Black w/ Light Green striped wire in headlight connector - pr	$47.99

WIN CORVETTE PRIZES!
Follow us for your chance to win.

Discounts & Coupons Emailed!
Enter your email address on CorvetteAmerica.com

WARNING: Cancer and Reproductive Harm — www.P65Warnings.ca.gov

Miscellaneous Wiring

29140	63-67	Alternator Conversion Kit	$21.99
29161	64-65	Choke Wire - F.I. Cold Enrichment	$14.99
25798	66-67	Flasher - Hazard / Alarm System Horn	$4.99
25799	63-67	Flasher - Turn Signal - 12 volt - Replacement	$8.99
35301	63-67	Fuse Block Mounting Plate w/ Rivets	$11.99
35302	63-67	Fuse Block Mounting Screws - pr	$1.99
32404	63-67	Cigarette Lighter Lamp Shield	$17.99
32420	63	Glovebox Lamp Switch Assembly - 63E w/o Metal Bulb Assembly	$14.99
32421	63-67	Glovebox Lamp Switch Assembly - 63L w/ Metal Bulb Reflector	$14.99
2051	63	Ground Wire - AC Compressor	$13.99
2052	64-67	Ground Wire - AC Compressor	$12.99
29407	64-65	Ground Wire - Voltage Regulator	$12.99
29408	65	Ground Wire - Voltage Regulator w/ TI & AC	$13.99
29409	66-67	Ground Wire - Horn to Radiator Support - w/ AC	$13.99
29430	64-67	Heater & AC Indicator Lamp Harness	$23.99
25826	64-67	Radio Power Lead	$29.99
29635	63-67	Repair Pigtail - Backup Lamp Plug - does not include lamp boot (# 29637)	$14.99
29636	63-67	Repair Pigtail, Tail and Brake Lamp Plug - does not include lamp boot (# 29637)	$14.99
29637	63-67	Rear Lamp Boot - dust shield for tail, brake and backup lamp sockets - accordion style	$12.99
32463	63-67	Speaker Harness	$14.99
29655	67	Speed Warning Harness	$23.99
29675	63	Tachometer Warning Harness - RPM over-rev warning buzzer wiring	$23.99
29710	65	Voltage Regulator Adapter Harness - w/ TI	$37.99

Power Window Harnesses

29548	63	All	$137.99
29550	64-65	All 64, 65 black w/ White striped wire at power window switch connector	$137.99
29549	65-66	1965 w/ solid White wire at power window switch connector & 1966 All	$137.99
29551	1967	All	$137.99

Rear Lamp Harnesses

29580	63	w/o Backup Lights	$230.99
29582	63	w/ Backup Lights	$230.99
29584	64	w/o BU Lights Conv. & Coupe w/ 35.5 Gal. Tank	$230.99
29585	64	Coupe w/o Backup Lights	$230.99
29586	64	w/ BU Conv. & Coupe w/ 35.5 Gallon Tank	$230.99
29587	64	Coupe w/ Backup Lights	$230.99
29588	65	w/o BU Lights, Convertible or Coupe w/ 35.5 gal. tank, solid yellow wire used on LH Taillight plug	$230.99
29590	65	Coupe w/o Backup Lights, solid yellow wire used on LH Taillight plug	$230.99
29593	65	w/ Backup Lights - Convertible or Coupe w/ 35.5 gallon tank; Black w/ Yellow striped wire used on LH Taillight plug	$230.99
29594	65	Coupe w/ Backup Lights - solid Yellow wire used on LH Taillight plug	$230.99
29592	66	w/ Back Up Lamps - 66 All / 65 LH Yellow - Convertible or 66 Coupe	$230.99
29596	67	All	$230.99

New products always added!

Corvette America.com

NEW

#32465 1964-67 TI Amplifier Extension

#29700 1964-67 TI Replacement Module

Transistor Ignition

29690	64	TI Harness - Amplifier to Coil and Distributor	$146.99
29691	65	TI Harness - Amplifier to Coil and Distributor - Solid pink wire used in connector at distributor	$146.99
29692	65	TI Harness - Amplifier to coil and distributor - Black w/ Pink striped wire used in connector at distributor	$146.99
29693	66-67	TI Harness - Amplifier to Coil & Distributor	$146.99
32465	64-67	Transistor Ignition Amplifier Extension - from internal circuit board to amplifier housing connector	$40.99
29700	64-67	Transistor Ignition Replacement Module - replaces original circuit board in amplifier	$152.99
51032	64-67	Transistor Ignition Amp Box Extension Retainer	$11.99

#33414

#33415

Fuse & Flasher Kits

33342	63	Fuse & Flasher Kit - 14 pc	$17.99
33414	64-66	Fuse & Flasher Kit - 18 pc	$17.99
33415	67	Fuse & Flasher Kit - 16 pc	$17.99

#33418 1965-66 Light Bulb Kit - 32 pc.

#0085 1965-67 Tie Strap Kit

Reproduction Tie Strap Kits

0084	63-64	63 Late	$26.99
0085	65-67	327	$26.99
0086	66-67	427	$30.99

Light Bulb Kits

33416	63	Light Bulb Kit	$24.99
33417	64	Light Bulb Kit	$24.99
33418	65-66	Light Bulb Kit	$30.99
33419	67	Light Bulb Kit	$26.99

WARNING: Cancer and Reproductive Harm — www.P65Warnings.ca.gov

Corvette America

LIFESTYLE

C7 Under Armour Polo

C7 Corvette Under Armour Tech Polo Shirts feature a Signature Moisture Transport System that wicks away sweat to help you stay cool. Each shirt has a self-fabric collar with three button placket and has hemmed sleeves. In addition, each has shoulder contrast piping with loose performance fit and with anti-odor technology built in. Embroidered with the Corvette C7 emblem on the front left chest and a heat sealed Under Armour logo on the right.

733B_ Black Under Armour Polo - M/L/X/D $60.99
733G_ Graphite Under Armour Polo - M/L/X/D $60.99
733N_ Royal Under Armour Polo - M/L/X/D $60.99
733R_ Red Under Armour Polo - M/L/X/D $60.99

C7 Ogio Polo

Men's C7 Ogio Polo features stay-cool wicking technology with an embroidered Stingray logo on left chest. The shirt has a 3-button bias-cut placket with debossed metal buttons.

670B_ Ogio C7 Stingray Polo - Black M/L/X/D.. $70.99

Embroidered C6 Camp Shirt

C6 logo and script embroidered on a plain black shirt. Left chest pocket, black buttons. Made of 100% rayon. Best if dry cleaned. Licensed by General Motors.

682B_ C6 Logo M/L/X/D $50.99

Red C7 Polo

Polo features 100% polyester quick moisture wicking fabric, 3 dyed-to-match pearlized buttons, open hemmed cuffs, split side vents and taped neck seams.

681R_ C7 Stingray Polo - Red M/L/X/D..... $40.99

C6 Corvette Men's Button Down Camp Shirt

Made from 70% rayon and 30% polyester, this shirt is a wrinkle-resistant, sand washed for softness, short-sleeve, camp shirt with special shadow weave, a full-button front, synthetic coconut shell buttons (with replacements), side vents, and a left-chest pocket. On the chest is an embroidered C6 Corvette emblem to complete your trim look.

753B_ Black Camp Shirt with C6 Logo - M/L/X/D $65.99
753W_ Creme Camp Shirt with C6 Logo - M/L/X/D $65.99
753N_ Blue Camp Shirt with C6 Logo - M/L/X/D $65.99

How To Order Your Size

When you see a product number such as **677N_**, simply attach your size letter in the blank. For example, to order a large, the product number would be **677NL**.

S = Small	X = X Large
M = Medium	D = 2X Large
L = Large	T = 3X Large

WARNING: Cancer and Reproductive Harm - www.P65Warnings.ca.gov

2019_C1_C2_Lifestyle_P232_245.indd 232 1/31/19 12:49 PM

Corvette Satin Jacket

The classic "Heartbeat" emblem with CORVETTE script is embroidered in original detail on the front left and back of this 100% nylon satin jacket. Cotton flannel lined with raglan sleeves. Matching snaps, knit collar, waistband & cuffs.

611B_ Satin Jacket M/L/X/D **$59.99**

C7 Under Armour 1/4 Zip Corvette Jacket

C7 Corvette Under Armour Quarter Zip Jackets feature a Signature Moisture Transport System that wicks away sweat to help you stay warm and dry. Each jacket has a self-fabric collar with a reflective 1/4 zip front for added visibility at night. In addition, each is made of soft and durable knit construction with brushed interior fleece that has white contrast sleeves and collar along with rolled forward seams for maximum comfort! Embroidered with the Corvette C7 emblem/Corvette script on the front left chest and a heat sealed Under Armour logo on the left shoulder.

742B_ Black M/L/X/D **$81.99**
742G_ Graphite M/L/X/D **$81.99**
742R_ Red M/L/X/D **$81.99**

Classic C6 Varsity Jacket

Melton boiled wool body with lambskin leather sleeves, collar and pocket trim. Features storm-flap covered snap front, knit rib cuffs and waistband, satin lining and embroidered Corvette emblem on the left chest and back. Imported.

This is a special order item. Please allow 10-12 weeks for delivery.

725B_ C6 Varsity Jacket M/L/X/D **$254.99**

C7 Lambskin Fashion Jacket

Black lambskin open hem jacket with two snaps for cinching waist. Features generous cut body, satin lining, antique-look zippers and snaps, adjustable cuffs and comfort waist. One inside zippered pocket. Embroidered tone-on-tone emblems on left chest and full back. Imported.

727B_ C7 Lambskin Jacket S/M/L/X **$336.99**

Embroidered Bomber Jacket

Lambskin bomber style jackets. Features generous cut body, satin lining, antique-look zippers and snaps, adjustable cuffs and comfort waist. Two inside zippered pockets. Corvette emblems on left chest and full back. Imported.

This is a special order item. Please allow 10-12 weeks for delivery.

716B_ C3 Bomber Jacket M/L/X/D **$305.99**
717B_ C5 Bomber Jacket M/L/X/D **$305.99**
718B_ C6 Bomber Jacket M/L/X/D **$305.99**
719B_ C7 Bomber Jacket M/L/X/D **$305.99**

Aviator Jacket

Classic black aviator jacket with nylon outer-shell and quilted satin lining. Features rib-knit cuffs, collar and waistband. Includes two front snap pockets, two interior zip pockets and a left sleeve pocket with zipper and pen slots. Embroidered emblem on left chest and full back. Imported.

The Aviator jacket size specs are smaller than average.
We recommend you order a size larger than usual.

720B_ C3 Aviator Jacket M/L/X/D **$91.99**
721B_ C4 Aviator Jacket M/L/X/D **$91.99**
722B_ C5 Aviator Jacket M/L/X/D **$91.99**
723B_ C6 Aviator Jacket M/L/X/D **$91.99**
724B_ C7 Aviator Jacket M/L/X/D **$91.99**

WARNING: Cancer and Reproductive Harm - www.P65Warnings.ca.gov

2019_C1_C2_Lifestyle_P232_245.indd 233 1/31/19 12:49 PM

709N_

707B_

710B_

693R_

708B_

705B_

735B_

732N_

734W_

660R_

662B_

660G_

709N_	**C7 Z06 Designed to Dominate** M/L/X/D	$19.99
707B_	**C7 Track Meets Street** M/L/X/D	$19.99
710B_	**C7 Stingray Emblem** M/L/X/D	$19.99
693R_	**C7 Made In America** M/L/X/D	$21.99
708B_	**C7 Stingrays** M/L/X/D	$19.99
705B_	**Living Legend** M/L/X/D	$19.99
735B_	**Black Grand Sport** M/L/X/D	$19.99
732N_	**Blue Grand Sport** M/L/X/D	$19.99
734W_	**White Grand Sport** M/L/X/D	$19.99
660R_	**Red w/ Stingray** M/L/X/D	$23.99
662B_	**Black C7 Stingray** M/L/X/D	$23.99
660G_	**Gray C7 Stingray** M/L/X/D	$23.99

WARNING: Cancer and Reproductive Harm - www.P65Warnings.ca.gov

2019_C1_C2_Lifestyle_P232_245.indd 234 1/31/19 12:49 PM

664G_

661W_

661B_

703B_

745N_

602W_

687B_

731R_

737N_

640G_

747G_

636G_

664G_	**Charcoal with C7 Logo** M/L/X/D	$23.99
661W_	**White 60th Anniversary 427** M/L/X/D	$19.99
661B_	**Black 60th Anniversary 427** M/L/X/D	$19.99
703B_	**C7 Z06** M/L/X/D	$19.99
745N_	**Blue C1 America's Sports Car** M/L/X/D	$23.99
602W_	**White C6 Logo** M/L/X/D	$19.99
687B_	**Black Born In The USA** M/L/X/D	$19.99
731R_	**C1 Corvettes** M/L/X/D	$19.99
737N_	**Time Flies** M/L/X/D	$21.99
640G_	**C2 Corvettes** M/L/X/D	$19.99
747G_	**Gray C6 Speeding Bullet** M/L/X/D	$19.99
636G_	**Nothing But Corvette** M/L/X/D	$19.99

WARNING: Cancer and Reproductive Harm - www.P65Warnings.ca.gov

C7 Corvette Under Armour Tee

736B_	Black M/L/X/D	$38.99
736G_	Gray M/L/X/D	$38.99
736N_	Royal M/L/X/D	$38.99
736R_	Red M/L/X/D	$38.99

738R_

738R_ **Evolution of a Legend** M/L/X/D..$21.99

744R_

744R_ **Red C2 Logo** M/L/X/D $19.99

Front *Back*

746B_ **Black w/ Logos on Back** M/L/X/D $24.99

752B_

752B_ **Black w/ Red Outline** M/L/X/D .$24.99

C7 Color Block Polo

Color Block Polo constructed of 100% polyester mesh pique. Features moisture wicking properties, UV protection and rib-knit collar. Embroidered C7 logo on left chest. Imported.

711B_	Black & Red Color Block Polo - M/L/X/D	$40.99
711G_	Charcoal & Black Color Block Polo - M/L/X/D	$40.99
711N_	Royal & Charcoal Color Block Polo - M/L/X/D	$40.99

Corvette America

GIFT CERTIFICATES

A great gift for any Corvette enthusiast!
Delivered **free of charge** via first-class mail.
Non-transferable. Non-refundable.

GC025	$25 Certificate	$25.00
GC050	$50 Certificate	$50.00
GC100	$100 Certificate	$100.00
GC200	$200 Certificate	$200.00
GC300	$300 Certificate	$300.00
GC400	$400 Certificate	$400.00
GC500	$500 Certificate	$500.00

WARNING: Cancer and Reproductive Harm - www.P65Warnings.ca.gov

2019_C1_C2_Lifestyle_P232_245.indd 236 1/31/19 12:50 PM

C5 & C6 Hooded Sweatshirts

714B_ C5 Black, Gray and White Hooded Sweatshirt M/L/X/D $60.99
715R_ C6 Red and Gray Hooded Sweatshirt M/L/X/D $60.99
715B_ C6 Black and Gray Hooded Sweatshirt M/L/X/D $60.99

Corvette Hoodie With Embroidered Emblem

These tagless hooded sweatshirts are a pre-shrunk, 50% cotton/50% polyester blend for the ultimate in soft fleece comfort. Double-needle coverstitching, ribbed cuffs and waistband. Your choice of C3-C6 full-color embroidered emblem and matching script.
Officially licensed by GM. Available in Gray Only.

563G_ C3 Corvette Hoodie M/L/X/D $35.99
564G_ C4 Corvette Hoodie M/L/X/D $35.99
565G_ C5 Corvette Hoodie M/L/X/D $35.99
566G_ C6 Corvette Hoodie M/L/X/D $35.99

C6 Black Hooded Sweatshirt

80% cotton / 20% polyester.

47625 - M
47626 - L
47627 - XL
47628 - 2XL

C6 Black Hoodie $60.99

C7 Stingray Hooded Sweatshirts

Product features double-lined hood with matching drawstring, double-needle stitching and front pouch pocket. Appliqué C7 logo with embroidered Stingray text. Made of 8 oz. 50/50 cotton/polyester blend (preshrunk). Imported.

679N_ C7 Marine Hooded Sweatshirt M/L/X/D $60.99
679B_ C7 Charcoal Hooded Sweatshirt M/L/X/D..... $60.99

Nothing But Corvette Hoodie

Full color C6 logo and "Corvette" script on the front with images of the C1 through C6 Corvettes on the back. Officially licensed by GM. Machine washable.

684B_ Nothing But Corvette Hoodie M/L/X/D $40.99

Gray & Black C5-C6 Crew Sweatshirt

Go Corvette casual in these great looking crewneck sweatshirts. They feature poly/cotton fleece on the inside with soft, elastic cuffs and waistband for a very comfortable fit. Your choice of emblem and Corvette script are embroidered on the front.

C5 GRAY	*C5 BLACK*	*C6 BLACK*
47073 M	**47061** M	**47548** M
47074 L	**47062** L	**47549** L
47075 XL	**47063** XL	**47550** XL
47076 2XL	**47064** 2XL	**47551** 2XL

Crew Sweatshirts $50.99

WARNING: Cancer and Reproductive Harm - www.P65Warnings.ca.gov

26692 C1 Embroidered $15.99

26694 C2 Embroidered $19.99

25940 C3 Sandwich Brim $19.99

25939 C3 Canvas Twill..... $19.99

26698 C4 Embroidered $15.99

48753 C6 Red/Black Sandwich.. $19.99

48754 C6 Yellow/Black Sandwich.. $19.99

48752 C6 Black/Red Sandwich.. $19.99

75406 C6 Orange Flag $26.99
754R6 C6 Red Flag $26.99
754Y6 C6 Yellow Flag $26.99

41984 Black Z06 ..... $19.99

756B7 Stingray Red Outline.....XXX

697N7 C7 Color Block $19.99

668B7 C7 Black Twill $19.99
668N7 C7 Blue Twill..... $19.99
668R7 C7 Red Twill $19.99
668W7 C7 White Twill $19.99

C7 Under Armour Caps

739BM	Black M/L	$38.99
739BL	Black L/XL	$38.99
739GM	Gray M/L	$38.99
739GL	Gray L/XL	$38.99
739RM	Red M/L	$38.99
739RL	Red L/XL	$38.99

713N7 C7 Blue Performance.. $19.99
713R7 C7 Red Performance... $19.99

701R7 C7 Red Carbon Fiber Cap. $24.99
701B7 C7 Black Carbon Fiber Cap $24.99

C1-C6 Corvette Logo & Script Caps

These comfortable caps feature a structured crown and adjustable back strap for the perfect fit. Available with your choice of C1-C6 emblem and matching script. Officially licensed by GM. Available in Black, White or Red.

BLACK	*WHITE*	*RED*
551B1 C1	**551W1** C1	**551R1** C1
551B2 C2	**551W2** C2	**551R2** C2
551B3 C3	**551W3** C3	**551R3** C3
551B4 C4	**551W4** C4	**551R4** C4
551B5 C5	**551W5** C5	**551R5** C5
551B6 C6	**551W6** C6	**551R6** C6

Corvette Logo Cap $19.99

Corvette T-Shirt & Cap Combo

This Corvette T-Shirt & Embroidered Khaki Cap combo is the perfect gift idea for that Corvette enthusiast in your life. This T-Shirt is 100% cotton with silk-screened Corvette script, and the cap features matching embroidered script. Officially licensed by GM.

567W_ T-Shirt & Cap Combo M/L/X/D..... $30.99

Visit corvetteamerica.com for our complete line of Corvette hats.

WARNING: Cancer and Reproductive Harm - www.P65Warnings.ca.gov

2019_C1_C2_Lifestyle_P232_245.indd 238 1/31/19 12:51 PM

Ladies C6 Lambskin Jacket

Made of soft, yet durable lambskin. Features princess seams which are body-slimming to all figures and front double-welt satin lined pockets. Front zips up to the fold down collar with an antique-look zipper and a silky poly/satin lining. Embroidered Corvette C6 emblem. Imported.

This is a special order item. Please allow 10-12 weeks for delivery.

726B_ C6 Lambskin Jacket S/M/L/X $254.99

Live Fast V-Neck Tee

Silk screen printing and hot pink foil decoration adorn this 100% ringspun cotton tee.

630B_ Live Fast Tee S/M/L/X $30.99

Ladies Long Sleeve C7 T-Shirt

The C7 logo is imprinted on this classic lightweight tee with contoured silhouette. Junior fit. Pre-shrunk 100% cotton tee. Imported.

651G_ Long Sleeve Tee S/M/L/X.....$24.99

755P7 Pink Rhinestone Stingray $24.99
755B7 Blk Rhinestone Stingray.....$24.99

712B7 Ladies C7 Sequined Cap . $19.99

Corvette Girl Tee

This 100% preshrunk cotton purple t-shirt features "Corvette Girl" in script in the shape of a heart.

704U_ Corvette Girl Tee S/M/L/X $19.99

Ladies Rhinestone Crossed Flags Scoop Neck Shirt

This scoop neck Bella style tee comes in black and features either the C5, C6, or C7 Corvette crossed flags logo with corresponding script fully in a colorful rhinestone design.

Made from 100% cotton, this shirt is comfortable enough to wear every day.

751B_ C5 Rhinestone Shirt S/M/L/X $38.99
750B_ C6 Rhinestone Shirt S/M/L/X $38.99
749B_ C7 Rhinestone Shirt S/M/L/X $38.99

White C5 Corvette Girl Tee

47928 Small
47929 Medium
47930 Large
47931 X Large
White C5 Corvette Girl Tee $19.99

WARNING: Cancer and Reproductive Harm - www.P65Warnings.ca.gov

Corvette Lambskin Duffel Bag

This genuine black lambskin Corvette Leather Bag boasts a zippered compartment and outer pocket at both ends, a roomy zippered main compartment, a reinforced bottom and full-length zippered side compartments. 16" x 8" x 9".

51754 C6 Duffel Bag $55.99
51755 C5 Duffel Bag $55.99
51756 Corvette Script Duffel Bag $55.99

Ogio C7 Stingray Big Dome Duffel Bag

Large capacity for the gym or light travel. Features front zippered pocket, padded shoulder strap, all metal hardware, ventilated shoe compartment and grab handle. Embroidered new Stingray emblem on front.
Size: 12"H x 24"W x 9"D. Imported.

52304 C7 Red Big Dome Duffel Bag $65.99

C5 Fleece Travel Blankets

The C5 emblem is embroidered on this 50" x 60" polyester fleece blanket. It features a nylon carrying strap with buckles so you can easily roll it up and take it with you on your next roadtrip.

49451 Red	**49452** Yellow	**49453** Black

C5 Fleece Travel Blanket $30.99

C7 5-Piece Luggage Set

Optimize the luggage space in your C7! Set includes two roller suitcases, backpack, duffel bag and messenger bag. Pieces available individually.

55687 C7 Luggage Set - 5 pc $975.99

52502

52501

52500 Duffel Bag - 40L Jet Black with C7 Logo $157.99
52501 Duffel Bag - 70L Jet Black with C7 Logo $198.99
52502 Backpack - Jet Black with C7 Logo $123.99
52503 Messenger Bag - Jet Black with C7 Logo $113.99
52504 Roller Suitcase - Jet Black with C7 Logo $305.99

757Y6

757Y7

C6 & C7 Racing Yellow Duffel Coolers

Rugged denier polyester, insulated, removable waterproof lining in main compartment. Two zippered end mesh pockets and two zippered front pockets, 12 can capacity. Embroidered Corvette Racing emblem.

757Y6 C6 Racing Duffel Cooler $45.99
757Y7 C7 Racing Duffel Cooler $45.99

WARNING: Cancer and Reproductive Harm - www.P65Warnings.ca.gov

Leather Car Kit

All leather construction with embroidered emblems on both sides. Features large lined inside pocket, heavy duty zippers and leather shoulder strap. Measures 24" x 12" x 10". Imported.

52420 C5 Leather Car Kit
52421 C6 Leather Car Kit $60.99

Engraved C7 Glassware

Available in three styles - the 13.5 oz. Classico Double Old Fashioned, the 16 oz. Classico Beverage and the 17 oz. Mugs. All feature the C7 Logo and Script engraved on high-quality Luigi Bormioli Lead-Free Crystal.

Four piece sets.

51837 C7 Engraved 13.5 oz. Short $68.99
51838 C7 Engraved 16 oz. Tall $68.99
51839 C7 Engraved 17 oz. Mugs $88.99

Engraved Generations Glassware Set

The Corvette Generations Set is sure to please any Corvette enthusiast. In this beautiful 6-glass set, each glass features a different engraving - one for each of the first six generations of Corvette History. Each glass is 14 oz. size.

51800 Generations Set $67.99

Corvette Rubber Coasters

100% recycled tire rubber. Made in USA. Four piece set.

55950 Corvette Rubber Coasters $14.99

Ogio C7 Stingray 18-24 Can Cooler

This soft-side collapsible cooler holds 18-24 twelve oz. cans in the zippered, insulated main compartment. It has dual-side beverage accessory holsters, front zippered pocket and an adjustable, padded shoulder strap. It also has an easy to clean, leak-proof lining. Size: 11"H x 11.5"W x 8.5"D.

690B7 Black C7 Cooler $65.99
690R7 Red C7 Cooler $65.99

Engraved Crystal Glassware

Fine crystal glassware, engraved with your choice of Corvette Logos. Available in many styles, and each precision engraved to order.

As each glass is engraved to order, please allow 2-3 weeks for delivery.

A. 13 OZ. HEAVY BASE DOF

51801 C1 **51805** C5
51802 C2 **51806** C6
51803 C3 **52321** C7
51804 C4
4 pc set $57.99

B. 15 OZ. HEAVY BASE COOLER

51807 C1 **51811** C5
51808 C2 **51812** C6
51809 C3 **52322** C7
51810 C4
4 pc set $57.99

C. 14 OZ. SHORT BEVERAGE

51813 C1 **51817** C5
51814 C2 **51818** C6
51815 C3 **52323** C7
51816 C4
4 pc set $40.99

D. 15 OZ. TALL BEVERAGE

51819 C1 **51823** C5
51820 C2 **51824** C6
51821 C3 **52324** C7
51822 C4
4 pc set $40.99

E. 17 OZ. MAXIM MUG

51825 C1 **51829** C5
51826 C2 **51830** C6
51827 C3 **52325** C7
51828 C4
4 pc set $50.99

F. 2 OZ. CORDIAL SHOT GLASS

51840 C1 **51844** C5
51841 C2 **51845** C6
51842 C3 **52317** C7
51843 C4
Each $9.99

G. 12.5 OZ. WINE

51831 C1 **51835** C5
51832 C2 **51836** C6
51833 C3 **52326** C7
51834 C4
Pair $33.99

WARNING: Cancer and Reproductive Harm - www.P65Warnings.ca.gov

Engraved C-Handle Mugs

These Premium Ceramic Mugs are precision engraved with your choice of C1-C7 Crossflags. Holding 11 oz. of your favorite beverage, you can't go wrong with this eye-catching gift.

Please allow 2-3 weeks for delivery, as these glasses are engraved at the time of ordering.

BLACK

51846 C1	**51849** C4	**52318** C7
51847 C2	**51850** C5	
51848 C3	**51851** C6	

COBALT

51852 C1	**51855** C4	**52319** C7
51853 C2	**51856** C5	
51854 C3	**51857** C6	

Engraved C-Handle Mug..... $14.99

Engraved Vegas Mugs

These Premium Vegas Ceramic Mugs are precision engraved with your choice of C1-C7 Crossflags. Holds 16 oz. of your favorite beverage.

Please allow 2-3 weeks for delivery, as these glasses are engraved at the time of ordering.

51858 C1	**51860** C3	**51862** C5	**52320** C7
51859 C2	**51861** C4	**51863** C6	

Engraved Vegas Mug..... $19.99

Ceramic Logo Mugs

These 15 oz. ceramic coffee mugs are the perfect size for your favorite morning beverage or late night brew. Large, easy-grip handle. Treat yourself or give as a gift to someone special. Measures 3.25" diameter and 4.5" tall. Image is on both sides of mug. Microwave and dishwasher safe.

50381 C1	**50383** C3	**50385** C5	**50391** C7
50382 C2	**50384** C4	**50386** C6	

Ceramic Logo Mug..... $12.99

Ceramic Grand Sport Mug

This 15 oz. Grand Sport coffee mug is dishwasher and microwave safe.

50393 Grand Sport Mug..... $12.99

40522 C1	**40526** C5
40523 C2	**40527** C6
40524 C3	**50392** C7
40525 C4	

Logo Travel Mugs

These travel mugs combine the excellent insulation and water-proof properties of neoprene wetsuit material and the usefulness of a spill-proof, stainless steel travel mug. 16 oz. capacity. Made in the U.S.A.

Logo Travel Mug..... $19.99

C7 Logo Stainless Steel Travel Mug

Take your beverages along for the ride in this 14 oz. black stainless steel travel mug with C7 logo and script.

51702 C7 Travel Mug..... $24.99

Lighted Corvette Clocks

Clocks measure 14" across. The outer high quality optical lexan lens is scratch resistant and won't yellow. The advertisement face is placed with an UV dried computer controlled printing process that will last for many years. Rim has a fluorescent circuline bulb with an on/off switch in the cord. The clock is a battery operated quartz movement that runs on 1 AA battery.

52309 Corvette Corvette Lighted Clock with 1956-57 Logo $132.99
52310 Corvette Corvette Lighted Clock with C1 Logo $137.99
52311 Corvette Corvette Lighted Clock with C3 Logo $137.99
52312 Corvette Corvette Lighted Clock with C4 Logo $132.99
52313 Corvette Corvette Lighted Clock with C5 Logo $132.99
52314 Corvette Corvette Lighted Clock with C6 Logo $137.99
52315 Corvette Corvette Lighted Clock with C7 Logo $132.99
52316 Corvette Corvette Lighted Clock with C2 Logo $137.99

WARNING: Cancer and Reproductive Harm - www.P65Warnings.ca.gov

2019_C1_C2_Lifestyle_P232_245.indd 242 1/31/19 12:52 PM

55902

55915

Corvette Die-Cast Models

These 1:18 scale die-cast models feature opening doors, hood, and trunk, a functional steering wheel and an accurately detailed interior. The perfect gift for the collector.

Approximate measurement: 10 inches x 3 inches.

55915	1954 Red	$152.99
55925	1957 Blue SS 1/43 Scale	$40.99
55916	1958 Silver Blue	$167.99
55917	1958 Snowcrest White	$167.99
55918	1958 Signet Red	$167.99
55921	1963 Convertible Silver Blue	$152.99
55919	1969 Cortez Silver	$152.99
55922	1986 Bright Red	$129.99
55923	1986 Black	$129.99
55924	1986 White	$129.99
55900	C7 Z06 C7R Edition, Corvette Racing Yellow	$172.99
55901	C7 Z06, Torch Red	$162.99
55902	C7 Z06, Laguna Blue Tintcoat	$162.99
55908	C7.R LeMans 24 Hrs 2016, Jordan Taylor/Oliver Gavin/Tommy Milner #64	$152.99
55909	C7.R LeMans 24 Hrs 2016, Jan Magnussen/Antonio Garcia/Ricky Taylor #63	$152.99
55910	C7.R Lime Rock 2016 Winner, Oliver Gavin/Tommy Milner #4	$152.99
55911	C7.R Lime Rock 2016 2nd Place, Antonio Garcia/Jan Magnussen #3	$152.99
55912	C7.R Plain Color Version, White with Red Accents	$132.99
55903	Grand Sport, Arctic White/Blue Stripes/Red Fender Hash Marks	$172.99
55904	Grand Sport, Watkins Glen Gray Metallic/ Black Stripes/Blue Fender Hash Marks	$172.99
55905	Grand Sport, Black/White Stripes/ Yellow Fender Hash Marks	$172.99
55906	Grand Sport, Red/White Stripes/ Black Fender Hash Marks	$172.99
55907	Grand Sport, Admiral Blue/White Stripes/ Red Fender Hash Marks	$172.99

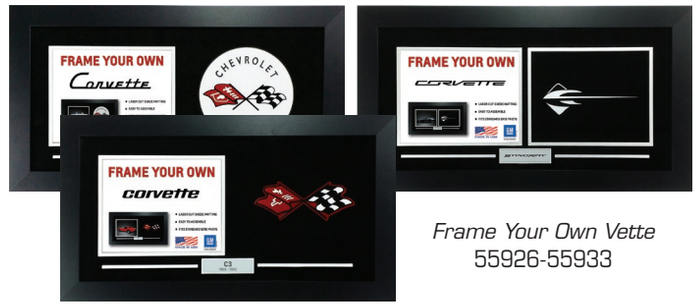

Frame Your Own Vette
55926-55933

Corvette Wall Art

Unique Corvette artwork sure to enhance any décor. Most pieces are beautifully mounted and framed in black bison wood frames. Frame Your Own generation art features a slot to include a photo of your own Corvette. Great gifts for the true Corvette enthusiast!

55926	C1 Corvette Frame Your Own with C1 Emblem	$101.99
55927	C2 Corvette Frame Your Own with C2 Emblem	$101.99
55928	C3 Corvette Frame Your Own with C3 Emblem	$101.99
55929	C4 Corvette Frame Your Own with C4 Emblem	$101.99
55930	C5 Corvette Frame Your Own with C5 Emblem	$101.99
55931	C6 Corvette Frame Your Own with C6 Emblem	$101.99
55932	C7 Corvette Frame Your Own with C7 Emblem	$101.99
55933	C7 Corvette Frame Your Own with Stingray Emblem	$101.99
55934	Wood Plaque with C7 Logo	$24.99
55935	Wood Plaque with Jake Logo	$24.99
55936	C7 Corvette Carbon Outline Framed Art	$91.99
55937	Corvette Grand Sport Generation Framed Art	$91.99
55938	C7 Corvette Z06 Burn Out Framed Art	$91.99
55939	C7 Corvette Blueprint Framed Art	$81.99
55940	Corvette Timeline Framed Art	$91.99
55941	Corvette Generations Panorama Framed Art	$101.99
55942	Corvette Word Art Panorama Framed Art	$101.99
55943	Mosaic Corvette Generation Panorama Framed Art	$101.99
55944	Corvette Generations Panel Logos Framed Art	$70.99
55945	Corvette Generations Panel Cars & Logos Framed Art	$81.99
55946	Corvette Generations Framed Tiles with Logos	$81.99
55947	C7 Corvette Gallery Canvas	$60.99
55948	Corvette Generations Gallery Canvas - Large 60"x20"	$152.99
55949	Corvette Generations Gallery Canvas - Medium 20"x16"	$44.99

Reproduction Sales Brochures for 1953-1978 Corvettes

If you didn't buy your 1953-78 Corvette new, (and not many of us did) then you probably don't have one of these excellent brochures. So authentic, even the most knowledgeable Corvette collector will have a hard time telling these repros from the originals except in one detail - they're in perfect condition! To order your sales brochure, simply add the two-digit year of the brochure you want to the part number below.

4711_ _	Sales Brochures	$13.99

WARNING: Cancer and Reproductive Harm - www.P65Warnings.ca.gov

1966-1982 Corvette Shop Manual

Covers all small-block and big-block Corvettes. Includes info on tune ups, maintenance, fuel system, ignition, cooling, engine, clutch, transmission, driveline, brakes, suspension, steering, electrical, body, ID's, specs, as well as the 1980-82 supplement. 8"W x 10.75"H Softbound.

23231 1966-1982 Corvette Shop Manual **$32.99**

1953-1972 Corvette Chassis Restoration Guide

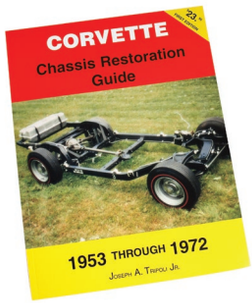

Never before has so much well-researched information been compiled about the important subject of chassis restoration. Facts on everything from the body removal to the stencils and markings. Easy-to-understand text and photography. 95 pages. Softbound.

5503 53-72 Corvette Chassis Restoration Guide **$22.99**

Corvette Buildsheet Book 1973-1982

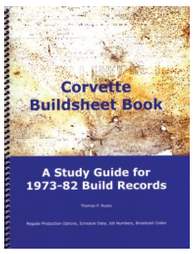

From author Thomas P. Russo, this study guide will aid in the understanding and correct interpretation of broadcast codes and how they were documented on buildsheets.

46303 Corvette Buildsheet Book - 1973-1982 ..... **$43.99**

The One & Only Corvette Black Book

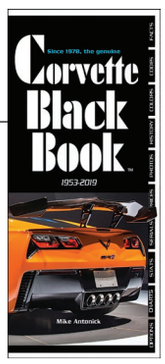

This is the definitive source for Corvette options, colors, codes, stats, prices, serial numbers, history and facts on each model from 1953 to 2019. Softcover.

26519 Corvette Black Book **$24.99**

Steve Magnante's 1001 Corvette Facts

Author and media figure Steve Magnante is well known for his encyclopedia-like knowledge of automotive facts. This read covers all generations from 1953 to present.

46314 Steve Magnante's 1001 Corvette Facts **$24.99**

1953-1982 Assembly Manuals

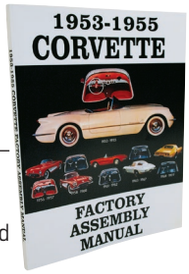

Precise reprints of the factory manuals, our Assembly Manuals provide original part numbers, torque specifications, information on production changes and various mechanical details. 8.5" x 11" Softbound.

472453 1953-1955 Assembly Manual **$24.99**
472456 1956-1957 Assembly Manual **$24.99**
4724__ 1958-1982 Assembly Manual **$24.99**

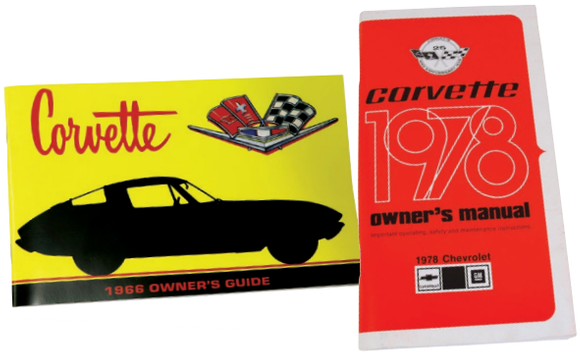

1953-1980 Corvette Owner's Manuals

These reproductions are accurately printed with original colors and paper. To order, simply add the two-digit year of the manual you want to the correct part number below.

470855 1953-1955 ..... **$13.99**
4708_ _ 1956-1980 ..... **$14.99**

Corvette by the Numbers

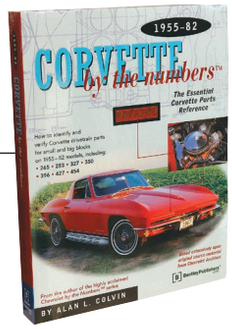

Identify and verify all V-8 drivetrain parts for small and big blocks on all 1955-1982 models, including 283, 327, 350, 396, 427 and 454. 596 pages. Over 1,000 photos, illustrations and diagrams. Softcover.

42911 Corvette by the Numbers **$60.99**

Corvette Illustrated Encyclopedia

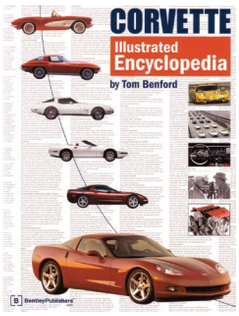

Tom Benford provides a detailed look at the terms and names that mean so much to Corvette history. Learn to decipher the numbers and interpret the slang that have significance to Corvette owners and enthusiasts. 324 pages. 193 black and white photos and illustrations. 720 entries. 7"W x 9.25"H Paperback.

46299 Corvette Illustrated Encyclopedia **$19.99**

WARNING: Cancer and Reproductive Harm - www.P65Warnings.ca.gov
2019_C1_C2_Lifestyle_P232_245.indd 244 1/31/19 12:52 PM

Automotive Prints by David Snyder

Prints are shipped in mailing tubes for protection. To have prints shipped flat, there is a $35 charge per order for the necessary special packaging. All prints measure approximately 18.5" x 26" on 22" x 28" acid-free stock unless otherwise stated.

Delivery Day - The 63's

Newly redesigned for 1963, the beloved "Midyears" hit the lots.

41853 ..... $41.99

The Pickups

A stunning tribute to some of the best looking pickups ever made.

40149 ..... $41.99

Solid Axles and Chicken Baskets

It's Saturday night and the only place to be is down at the local drive-in.

34807 ..... $41.99

Getting off to a Clean Start

Before you hit the show, get shined up and ready at the car wash.

34805 ..... $41.99

Delivery Day - The 69's

The 350 is in, and a four month extension means a production record lasting 6 years.

43209 ..... $41.99

Delivery Day - The 70's

The debut of the LT1, but the end of a performance era that was missed for years.

43586 ..... $41.99

Delivery Day - The 53's

Only 300 buyers drove these off of the lot new. They were driving straight into history.

40433 ..... $41.99

Delivery Day - The 67's

It marks the end of the 2nd Generation, but we will have big block fever for years to come.

42768 ..... $41.99

Route 66 Root Beer

Corvettes of every generation meet on the most legendary of highways.

37643 ..... $41.99

Royal Pontiac

Get the "Royal" treatment from the legendary staff at Royal Pontiac.

43208 ..... $41.99

The Sleeper Awakes

The 1969 Chevy Nova SS is unleashed on the world, and a worthy street fighter is born.

42930 ..... $41.99

Let's Go See The Jets

Go back to 1961, when going to see the jets take off and land was a true marvel.

40370 ..... $41.99

- Buy any two David Snyder Prints for $75, Buy any three for $99 -

WARNING: Cancer and Reproductive Harm - www.P65Warnings.ca.gov

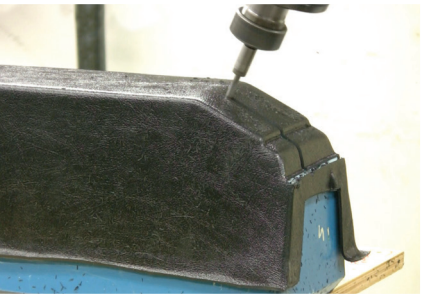

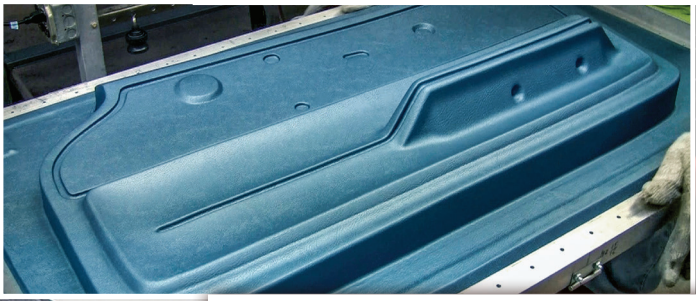

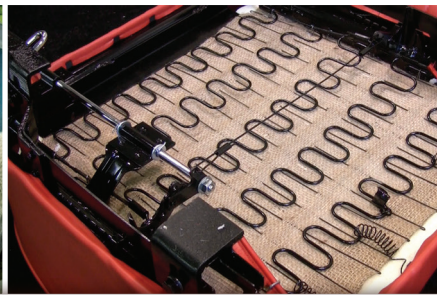

Corvette America has been a leading manufacturer of Corvette Interiors for more than 40 years. From seat covers and door panels to dash pads and sun visors, we take pride in making quality products that generations of enthusiasts have used to restore their Corvettes.

That tradition of quality and service continues but with some modern updates. We have expanded our Late Model offerings, as well as assembled an inventory of Restomod and Performance Products! Let us help you make your Corvette vision a reality.

Make Corvette America your choice for Restoration, Style & Performance!

800-458-3475

CorvetteAmerica.com